SOBOBA SOVOVATUM VILLAGE - PHASE 2

2-STORY RETAIL VANILLA-SHELL BUILDING

SAN JACINTO, CA

ABBREVIATIONS

A	AB	ANCHOR BOLT
	ABV	ABOVE
	AC	ASPHALT CONCRETE
	ACC	COMMERCIAL ACCESSORY
	ACCS	ACCESSIBLE
	A/C	AIR CONDITIONING
	ACOUS	ACOUSTICAL
	ACR	RESIDENTIAL ACCESSORY
	ACT	ACOUSTICAL CEILING TILE
	AD	AREA DRAIN
	ADJ	ADJACENT
	ADP	ADAPTABLE
	AEC	COMMERCIAL EQUIPMENT
	AER	RESIDENTIAL EQUIPMENT
	AFF	ABOVE FINISHED FLOOR
	AGGR	AGGREGATE
	ALUM	ALUMINUM
	APC	COMMERCIAL APPLIANCE
	APPROX	APPROXIMATE
	APR	RESIDENTIAL APPLIANCE
	ARCH	ARCHITECT
	ASPH	ASPHALT
	ASSY	ASSEMBLY
	AT	ARCHITECTURAL TRIM
	AV	AUDIO VISUAL
B	B	BASE
	BD	BOARD
	BIT	BITUMINOUS
	BLDG	BUILDING
	BLKG	BLOCKING
	BM	BEAM
	BO	BOTTOM OF
	BOH	BACK OF HOUSE
	BOT	BOTTOM
	BRK	BRICK
C	CAB	CABINET
	CB	CATCH BASIN
	CC	CONCEALED CLOSER
	CI	CAST IRON
	CJ	CONTROL JOINT
	CL	CENTERLINE
	CLG	CEILING
	CLR	CLEAR
	CM	COMMON
	CMU	CONCRETE MASONRY UNIT
	CNTR	COUNTER
	CO	CLEAN OUT
	COL	COLUMN
	CONC	CONCRETE
	CONN	CONNECTION
	CONT	CONTINUOUS
	CONT'D	CONTINUED
	CORR	CORRIDOR
	CRP	CARPET
	CRPT	CARPET TILE
	CS	CONCRETE SEALER
	CT	CERAMIC TILE
	CTR	CENTER
D	(D)	DEPTH
	DBL	DOUBLE
	DEG	DEGREE
	DEPT	DEPARTMENT
	DET	DETAIL
	DF	DRINKING FOUNTAIN
	DIA	DIAMETER
	DIAG	DIAGONAL
	DIM	DIMENSION
	DISP	DISPENSER
	DN	DOWN
	DP	DRAPERY
	DR	DOOR
	DS	DOWNSPOUT
	DWG	DRAWING
	DWR	DRAWER
E	E	EAST
	(E)	EXISTING
	EA	EACH
	EIFS	EXTERIOR INSULATION & FINISH SYSTEM
	EJ	EXPANSION JOINT
	EL	ELEVATION
	ELEC	ELECTRICAL
	ELEV	ELEVATOR
	EMER	EMERGENCY
	ENCL	ENCLOSED
	EOS	EDGE OF SLAB
	EP	ELECTRICAL PANEL BOARD
	EPS	EXPANDED POLYSTYRENE
	EQ	EQUAL
	EQUIP	EQUIPMENT
	EWC	ELECTRIC WATER COOLER
	EXP	EXPANSION
	EXPO	EXPOSED
	EXT	EXTERIOR
F	FA	FIRE ALARM
	FAC	FACTORY
	FBGL	FIBERGLASS
	FBR	FABRIC
	FC	FLOOR CLOSER
	FD	FLOOR DRAIN
	FDN	FOUNDATION
	FE	FIRE EXTINGUISHER
	FEC	FIRE EXTINGUISHER CABINET
	FF	FACTORY FINISH
	FG	FINISH GRADE
	FH	FIRE HYDRANT
	FHC	FIRE HOSE CABINET
	FIN	FINISH
	FIX	FIXTURE
	FLSK	FLOOR SINK
	FLR	FLOOR
	FLRG	FLOORING
	FLT	FLOOR TILE
	FLUOR	FLUORESCENT
	FO	FACE OF
	FOC	FACE OF CONCRETE
	FOF	FACE OF FINISH
	FOM	FACE OF MASONRY
	FOS	FACE OF STUD
	FOW	FACE OF WALL
	FP	FIRE PROOFING
	FR	FIRE RATED
	FRA	FIREBACKIRD ASSEMBLY
	FRM	FRAME
	FRP	FIBERGLASS REINFORCED PLASTIC
	FS	FINISH SURFACE
	FSA	FIRESTOP ASSEMBLY
	FT	FEET or FOOT
	FTG	FOOTING
	FUR	FURRING
	FX	FIXED
G	GA	GAUGE
	GALV	GALVANIZED
	GB	GYPSUM BOARD
	GFI	GROUND FAULT INTERRUPT
	GFRC	GLASS FIBER REINFORCED CONCRETE
	GFRG	GLASS FIBER REINFORCED GYPSUM
	GL	GLASS
	GR	GROUT
	GYP	GYPSUM
H	(H)	HEIGHT
	HB	HOSE BIBB
	HC	HOLLOW CORE
	HDBD	HARDBOARD
	HDRL	HANDRAIL
	HDWD	HARDWOOD
	HDWR	HARDWARE
	HGT	HEIGHT
	HM	HOLLOW METAL
	HORIZ	HORIZONTAL
	HP	HIGH POINT
	HR	HOUR
	HVAC	HEATING VENTILATING & AIR CONDITIONING
I	ID	INSIDE DIAMETER
	INSUL	INSULATION
	INT	INTERIOR
J	JAN	JANITOR
	JST	JOIST
	JT	JOINT
K	KD	KNOCKDOWN
	KIT	KITCHEN
L	(L)	LENGTH
	LAM	LAMINATE
	LAV	LAVATORY
	LB	POUND
	LIN	LINEN
	LP	LOW POINT
	LOC	LOCATION
	LTWT	LIGHT WEIGHT
	LVR	LOUVER
M	MAINT	MAINTENANCE
	MAT	MATERIAL
	MAX	MAXIMUM
	MB	MACHINE BOLT
	MC	MEDICINE CABINET
	MCC	MOTOR CONTROL CENTER
	MDF	MEDIUM DENSITY FIBERBOARD
	MDO	MEDIUM DENSITY OVERLAY
	MECH	MECHANICAL
	MEMB	MEMBRANE
	MEZZ	MEZZANINE
	MFC	MINERAL FIBER CEMENT
	MFG	MANUFACTURING
	MFR	MANUFACTURER
	MH	MANHOLE
	MIN	MINIMUM
	MIR	MIRROR
	MISC	MISCELLANEOUS
	MO	MASONRY OPENING
	MOD	MODIFIED
	MTD	MOUNTED
	MTL	METAL
	MUL	MULLION
N	N	NORTH
	N/A	NOT APPLICABLE
	NC	NON COMBUSTIBLE
	NIC	NOT IN CONTRACT
	NO	NUMBER
	NR	NON RATED
	NTS	NOT TO SCALE
O	O/	OVER
	OA	OVERALL
	OC	ON CENTER
	OCC	OCCUPANCY
	OD	OUTSIDE DIAMETER
	OF	OVERFLOW DRAIN
	OFF	OFFICE
	OFOI	OWNER FURNISHED OWNER INSTALLED
	OFCI	OWNER FURNISHED CONTRACTOR INSTALLED
	OP	OPAQUE
	OPNG	OPENING
	OPP	OPPOSITE
	OPR	OPERABLE
	OPT	OPTIONAL
P	P	PAINT
	PAR	PARAPET
	PAT	PATERN
	PAV	PAVING
	PB	PUBLIC
	PC	POLISHED CONCRETE
	PCS	PIECES
	PE	PAINT EGGSHELL
	PEN	PENETRATION
	PERF	PERFORATED
	PF	PANT FLAT
	PG	PAINT GLOSS
	PH	PANIC HARDWARE
	PL	PLATE
	PLAM	PLASTIC LAMINATE
	PLAS	PLASTER
	PLUMB	PLUMBING
	PLYWD	PLYWOOD
	PN	PARTITION
	PNL	PANEL
	POC	POINT OF CONNECTION
	POS	POINT OF SALE
	PR	PAIR
	PREFAB	PREFABRICATED
	PREP	PREPARATION
	PROD	PRODUCT
	PROJ	PROJECTION
	PROP	PROPERTY
	PRTR	PRESSURE TREATED
	PSG	PAINT SEMI-GLOSS
	PT	POINT
	P-T	POST TENSIONED
	PV	PRIVATE
	PX	PAINT EPOXY
Q	QT	QUARRY TILE
R	R	RISER
	RAD	RADIUS
	RB	RESILIENT BASE
	RC	RESILIENT CHANNEL
	RCP	REFLECTED CEILING PLAN
	RD	ROOF DRAIN
	REF	REFERENCE
	REFR	REFRIGERATOR
	REINF	REINFORCED
	REQ	REQUIRED
	RES	RESILIENT
	REV	REVERSE
	RFG	ROOFING
	RGTR	REGISTER
	RM	ROOM
	RO	ROUGH OPENING
	RQMTS	REQUIREMENTS
	RS	ROUGH SAWN
	RWL	RAIN WATER LEADER
S	S	SOUTH
	SAF	SELF ADHERED FLASHING
	SC	SOLID CORE
	SCHED	SCHEDULE
	SF	SQUARE FEET
	SH	SINGLE HUNG
	SHR	SHOWER
	SHT	SHEET
	SHTG	SHEATHING
	SIM	SIMILAR
	SL	SLIDER
	SLP	SLOPE
	SLR	SEALER
	SMC	SURFACE MOUNTED CLOSER
	SPEC	SPECIFICATIONS
	SPF	SPECIALTY FINISH
	SPK	SPEAKER
	SQ	SQUARE
	SST	STAINLESS STEEL
	SSK	SERVICE SINK
	STO	STONE
	STA	STATION
	STD	STANDARD
	STOR	STORAGE
	STL	STEEL
	ST	STAIN
	STRL	STRUCTURAL
	SUSP	SUSPENDED
	SYM	SYMMETRICAL
	SYMB	SYMBOL
	S&P	SHELF AND POLE
	S4S	SURFACED FOUR SIDES
T	T	TEMPERED
	TBD	TILE BACKERBOARD
	T&G	TONGUE AND GROOVE
	TC	TOP OF CURB
	TCA	TILE COUNCIL OF AMERICA
	TEL	TELEPHONE
	TER	TERRAZZO
	TG	TOP OF GRATE
	THK	THICK
	TO	TOP OF
	TOC	TOP OF CONCRETE
	TOD	TOP OF DECK
	TOM	TOP OF MASONRY
	TOP	TOP OF PARAPET
	TOS	TOP OF STEEL
	TOW	TOP OF WALL
	TP	TOP OF PAVING
	TPD	TOILET PAPER DISPENSER
	TR	TREAD
	TRANS	TRANSLUCENT
	TYP	TYPICAL
U	U	UNIT
	UL	UNDERWRITERS LABORATORIES
	UNF	UNFINISHED
	UNO	UNLESS NOTED OTHERWISE
	UPH	UPHOLSTERY
	UR	URINAL
V	VAN	VAN ACCESSIBLE STALL
	VAR	VARIES
	VCT	VINYL COMPOSITION TILE
	VERT	VERTICAL
	VEST	VESTIBULE
	VIF	VERIFY IN FIELD
	VNL	VINYL
	VNR	VENEER
	VT	VINYL TILE
	VWC	VINYL WALL COVERING
W	(W)	WIDTH
	W	WEST
	W/	WITH
	W/O	WITHOUT
	WA	WALL
	WAP	WIRELESS ACCESS POINT
	WC	WATER CLOSET
	WCV	WALL COVERING
	WD	WOOD
	WG	WIRE GLASS
	WGT	WEIGHT
	WDB	WOOD BASE
	WDF	WOOD FLOOR
	WH	WATER HEATER
	WIN	WINDOW
	WO	WHERE OCCURS
	WP	WORK POINT
	WR	WATER RESISTANT
	WS	WAINSCOTE
	WWF	WELDED WIRE FABRIC
Y	YD	YARD
	#	NUMBER
	@	AT
	&	AND
	'	FEET
	"	INCH
	<	ANGLE
	℄	CENTERLINE

PROJECT DIRECTORY

OWNER:	SEDC 23906 SOBOBA ROAD SAN JACINTO, CA 92581 951-663-2058
ARCHITECT:	KTGY DAVID SCHMITZ, SENIOR DIRECTOR 17911 VON KARMAN AVE., #200 IRVINE, CA 92614 949-797-8364
STRUCTURAL ENGINEER:	ANF STRUCTURAL ANDY YU 9420 TELSTAR AVE, SUITE 118 EL MONTE, CA 91731 626-448-8182
MEP ENGINEER:	SCHNACKEL ENGINEERS JOE EMBURY 3035 SOUTH 72ND STREET OMAHA, NE 68124 531-329-6292
CIVIL ENGINEER:	ERSC, INC MATT BRUDIN 1861 W REDLANDS BOULEVARD REDLANDS, CA 92373 909-890-1255
LANDSCAPE:	C2 COLLABORATIVE NATE MAGNUSSON, PLA 100 AVENIDA MIRAMAR SAN CLEMENTE, CA 92672 -
LIGHTING DESIGNER:	LDA LIGHTING DESIGN ANDY POWELL 2830 TEMPLE AVENUE LONG BEACH, CA 90806 562-326-5810

NOTES

1. CAREFULLY REVIEW ALL CONSTRUCTION DOCUMENTS PRIOR TO BID AND START OF CONSTRUCTION. CONFIRM THAT WORK INDICATED IN THE CONSTRUCTION DOCUMENTS IS BUILDABLE AS SHOWN. IMMEDIATELY NOTIFY THE ARCHITECT IN WRITING OF ANY CONFLICTS, DISCREPANCIES AND OMISSIONS IN THE WORK SHOWN.
2. CAREFULLY COMPARE ALL CONSTRUCTION DOCUMENTS WITH THE EXISTING SITE CONDITIONS PRIOR TO BID AND START OF CONSTRUCTION. IMMEDIATELY NOTIFY THE ARCHITECT IN WRITING OF ANY CONFLICTS, DISCREPANCIES AND OMISSIONS.
3. DO NOT SCALE DRAWINGS. REVIEW ALL DIMENSIONS SHOWN IN CONSTRUCTION DOCUMENTS PRIOR TO BID AND START OF CONSTRUCTION. IMMEDIATELY NOTIFY THE ARCHITECT IN WRITING OF ANY CONFLICTS, DISCREPANCIES AND OMISSIONS.
4. MAINTAIN FOR DURATION OF WORK EXITS, LIGHTING, FIRE PROTECTION DEVICES AND ALARMS REQUIRED BY ALL APPLICABLE CODES, ORDINANCES AND GOVERNING AGENCIES. VERIFY WITH AGENCIES PRIOR TO BID AND START OF CONSTRUCTION.
5. KEEP IN PLACE AND STORED MATERIALS DRY AT ALL TIMES. REMOVE ITEMS THAT BECOME WET FROM PROJECT SITE AN DISPOSE OF IN A LEGAL MANNER.
6. FIRE RESISTANCE RATINGS, ASSEMBLIES, CLASSIFICATIONS, STANDARDS AND LISTINGS INDICATED ARE TAKEN FROM VARIOUS REFERENCE STANDARDS. MAINTAIN, AT THE PROJECT SITE, A COPY OF AN APPLICABLE EDITION OF EACH REFERENCE STANDARD INDICATED.
7. REVIEW, PLAN, LAYOUT, VERIFY AND COORDINATE INTERFACES OF ALL PORTIONS OF THE WORK PRIOR TO ACTUAL EXECUTION.
8. PROVIDE ALL WORK NECESSARY FOR A COMPLETE PROJECT, INCLUDING ANY OUTSIDE LIMIT OF WORK, OUTSIDE PROPERTY LINE, ON ADJACENT PROPERTIES AND IN THE PUBLIC WAY.

SYMBOLS

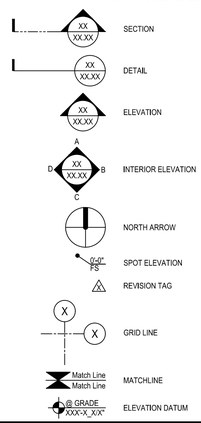

VICINITY MAP

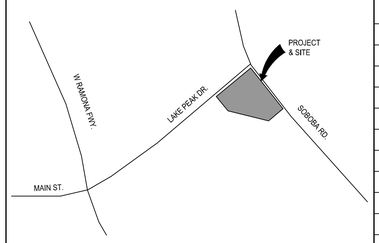

PROJECT SUMMARY

PROJECT NAME:	SOBOBA SOVOVATUM VILLAGE - PHASE 2
ADDRESS:	- SAN JACINTO, CA
BUILDING AREA	5,100 SQ.FT. + LEVEL 1: 2,550 SQ.FT. + LEVEL 2: 2,550 SQ.FT.
PROPOSED HEIGHT:	40'-0" MAX.
STORIES:	2 - STORY
CONSTRUCTION TYPE:	V-B
OCCUPANCY GROUP:	NON-SEPARATED (IBC SECTION 508) OCCUPANCIES + FIRST FLOOR: GROUP A-2 OCCUPANCY (CASINO GAMING AND ASSOCIATED ASSEMBLY USE) + SECOND FLOOR: GROUP B OCCUPANCY (OFFICE AND SUPPORT SPACES)
SPRINKLERS:	FULLY SPRINKLERED, NFPA 13

SCOPE OF WORK

SCOPE OF WORK:
CONSTRUCTION OF A NEW 5,100 SF TWO-STORY, VANILLA SHELL BUILDING, FULLY SPRINKLERED THROUGHOUT WITH AN EXTERIOR EXIT STAIR, CANOPIES, ONE HYDRAULIC ELEVATOR WITH DEDICATED MACHINE ROOM AND MULTI-OCCUPANCY RESTROOMS. SCOPE INCLUDES STRUCTURAL, MECHANICAL, PLUMBING, ELECTRICAL AND LIGHTING DESIGN SYSTEMS.
REFER TO SITE IMPROVEMENTS, CIVIL AND LANDSCAPE UNDER SEPARATE SUBMITTAL.

CODE SUMMARY

2024 INTERNATIONAL BUILDING CODE
2024 INTERNATIONAL ENERGY CONSERVATION CODE
2024 UNIFORM MECHANICAL CODE
2024 NATIONAL ELECTRICAL CODE
2024 UNIFORM PLUMBING CODE
2024 INTERNATIONAL FIRE CODE

2025 CALIFORNIA GREEN BUILDING STANDARDS CODE (CALGREEN CODE), TITLE 24 C.C.R.

PARTIAL LIST OF APPLICABLE STANDARDS

NFPA 13 AUTOMATIC SPRINKLER SYSTEMS (CALIFORNIA AMENDED)
NFPA 14 STANDPIPE SYSTEMS (CALIFORNIA AMENDED)

DEFERRED SUBMITTALS

SUBMIT ALL DEFERRED SUBMITTAL DOCUMENTS TO THE ARCHITECT FOR REVIEW, MAKE SUBMITTAL TO THE BUILDING OFFICIAL ONLY AFTER THE CHANGES REQUESTED BY THE ARCHITECT HAVE BEEN COMPLETED. ALLOW FOR ARCHITECT'S REVIEW TIME AS WELL AS REVIEW, REVISION, APPROVAL AND PERMIT PROCESSING TIME BY AGENCY IN CONSTRUCTION SCHEDULE.

1. TRUSS SYSTEM
2. SIGNAGE PROGRAM INCLUDING ALL SITE & BUILDING ACCESSIBILITY SIGNAGE
3. FIRE SPRINKLER SYSTEM
4. FIRE ALARM SYSTEM

SEPARATE SUBMITTALS

1. SITE IMPROVEMENTS INCLUDING LANDSCAPE
2. CIVIL

SHEET INDEX

ARCHITECTURAL

A0-01	TITLE SHEET
A0-11	ACCESSIBILITY DETAILS
A0-12	ELEVATOR ACCESSIBILITY INFORMATION
A0-21	CODE COMPLIANCE FLOOR PLANS
A1-10	SITE PLAN
A2-10	SLAB PLAN
A2-11	FLOOR PLANS
A2-12	POWER AND DATA FLOOR PLANS
A2-13	FINISH FLOOR PLANS
A2-14	REFLECTED CEILING PLANS
A2-21	ROOF PLAN
A3-11	EXTERIOR ELEVATIONS
A4-11	WALL SECTIONS
A4-12	WALL SECTIONS
A5-11	ENLARGED RESTROOM PLANS AND RESTROOM ELEVATIONS
A5-12	STAIRS PLANS AND ENLARGED KITCHENETTE
A5-13	ELEVATOR PLANS AND SECTION
A6-11	INTERIOR ELEVATIONS
A7-11	DOOR AND STOREFRONT SCHEDULE
AD-01	PROJECT DETAILS
AD-02	PROJECT DETAILS
AD-03	PROJECT DETAILS
AD-04	PROJECT DETAILS
AD-05	STAIR DETAILS
AD-06	PROJECT DETAILS

STRUCTURAL

ST0	GENERAL NOTES
ST1	FOUNDATION DEAILS
ST2	ROOF FRAMING DETAILS
ST3	STRUCTURAL DETAILS
S1.0	2-STORY VANILLA SHELL BUILDING FOUNDATION PLAN
S1.1	2-STORY VANILLA SHELL BUILDING 2nd FLOOR FRAMING PLAN
S1.2	2-STORY VANILLA SHELL BUILDING ROOF FRAMING PLAN
S1.3	2-STORY VANILLA SHELL BUILDING HI-ROOF FRAMING PLAN
S3.0	2-STORY BUILDING WALL SECTIONS
S3.1	2-STORY BUILDING WALL SECTIONS
S3.2	2-STORY BUILDING WALL SECTIONS

LIGHTING DESIGN

LD 0.1	SITE LIGHTING PLAN
LD 1.0	LIGHTING FIXTURE SCHEDULE
LD 1.1	2 STORY RETAIL - LIGHTING FLOOR PLAN - LEVEL 1
LD 1.2	2 STORY RETAIL - LIGHTING FLOOR PLAN - LEVEL 2
LD 1.5	2 STORY RETAIL - LIGHTING EXTERIOR ELEVATION

MECHANICAL

M1-11	HVAC PLAN
M2-11	MECHANICAL DETAILS AND SCHEDULES
M2-12	MECHANICAL DETAILS
M3-11	MECHANICAL SPECIFICATIONS

ELECTRICAL

E1-11	POWER AND SYSTEMS PLANS
E1-12	LIGHTING PLANS
E2-11	ELECTRICAL DETAILS
E2-12	ONE-LINE DIAGRAM AND PANEL SCHEDULES
E3-11	ELECTRICAL SPECIFICATIONS
E3-12	ELECTRICAL SPECIFICATIONS

PLUMBING

P1-11	PLUMBING PLANS
P2-11	ENLARGED PLUMBING PLANS
P2-12	PLUMBING RISER DIAGRAMS
P3-11	PLUMBING SCHEDULES
P3-12	PLUMBING DETAILS
P4-11	FIRE SPRINKLER SPECIFICATIONS
P4-12	FIRE SPRINKLER SPECIFICATIONS
P4-13	PLUMBING SPECIFICATIONS
P4-14	PLUMBING SPECIFICATIONS
P4-15	PLUMBING SPECIFICATIONS
FA1-11	FIRE ALARM PLANS
FA2-11	FIRE ALARM SPECIFICATIONS

ENERGY

EN1-11	ENERGY COMPLIANCE
EN1-12	ENERGY COMPLIANCE
EN1-13	ENERGY COMPLIANCE
EN1-14	ENERGY COMPLIANCE
EN1-15	ENERGY COMPLIANCE
EN1-16	ENERGY COMPLIANCE
EN1-17	ENERGY COMPLIANCE

ktgy

17911 Von Karman Ave.
Suite 200
Irvine, CA 92614
ktgy.com
949.851.2133

ktgy Project Number	20250428
Contact	DORINA WATSON
Email	dwatson@ktgy.com
Senior Director	DAVID SCHMITZ
Designer	RUSSEL ROSALES

Developer
SEDC
23906 SOBOBA ROAD
SAN JACINTO, CA 92581

PHONE: (951) 663-2058

SOBOBA SOVOVATUM VILLAGE PHASE-2
-
SAN JACINTO, CA

No.	DATE	DESCRIPTION

Client is responsible for notifying architect in writing for any discovered errors or omissions in the plans and specifications during construction of the project. Failure for Client to notify Architect of any known errors or omissions in the plans or specifications, and proceeding with constructing the portion of work shown in the plans or specifications containing known errors or omissions shall be a waiver by Client for any liability of Architect for such known errors or omissions. Client releases Architect for any liability for such portions of work, and Architect shall not be liable for any delay damages, change orders, repair costs, removal or demolition costs, or replacement of any such portions of work.

2026-05-26, ISSUED FOR BID

TITLE SHEET

A0-01

Printed: 1/7/2026 4:29:06 PM

COPYRIGHT 2024 KTGY GROUP INC. These plans and specifications are protected by United States copyright law and may not be used, reproduced, distributed, transmitted, displayed, or modified in any way without the prior written consent of KTGY Group, Inc. or the authorized copyright holder or licensee.

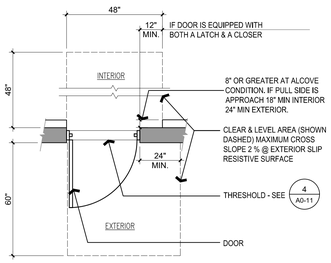

EXTERIOR DOOR CLEARANCES

SCALE	
NTS	24

292428-2 STORY A0-11

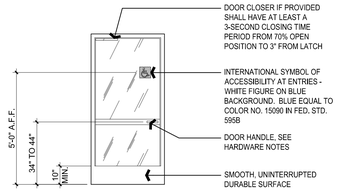

NOTES:

1. ALL ENTRANCES AND ALL EXTERIOR GROUND FLOOR EXIT DOORS TO BUILDINGS AND FACILITIES SHALL BE MADE ACCESSIBLE TO PERSONS WITH DISABILITIES.
2. DURING PERIODS OF PARTIAL OR RESTRICTED USE OF BUILDING OR FACILITY, ENTRANCES USED FOR PRIMARY ACCESS SHALL BE ACCESSIBLE TO AND USABLE BY PERSONS WITH DISABILITIES.
3. EXIT DOORS SHALL BE OPENABLE FROM THE INSIDE WITHOUT THE USE OF KEY OR ANY SPECIAL KNOWLEDGE OR EFFORT.
4. INTERNATIONAL SYMBOL OF ACCESSIBILITY SHALL BE STANDARD USED TO IDENTIFY FACILITIES ACCESSIBLE TO AND USABLE BY PHYSICALLY DISABLED. INTERNATIONAL SYMBOL OF ACCESSIBILITY WITH DIRECTIONAL SIGNS SHALL BE USED WHERE ACCESSIBLE ROUTE DIVERGES FROM REGULAR CIRCULATION PATH.

TYP. STOREFRONT EXIT/ENTRANCE

SCALE	
NTS	20

292428-2 STORY A0-11

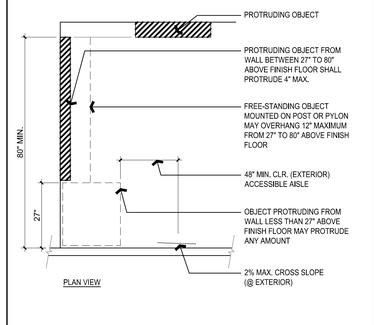

ACCESSIBLE ROUTE CLEARANCES

SCALE	
NTS	16

292428-2 STORY A0-11

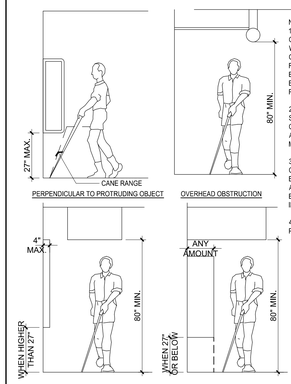

NOTES
1. FREE STANDING SIGNS ON POSTS OR PYLONS W/ BOTTOM EDGE AT 80" OR LESS ABOVE FINISH FLOOR OR GROUND. EDGES OF SIGN SHALL BE ROUNDED W/ MIN. RADIUS OF .125 INCHES.
2. PROTRUDING OBJECTS SHALL NOT REDUCE CLEAR WIDTH OF ACCESSIBLE ROUTE OR MANEUVERING SPACE.
3. AT VERTICAL CLEARANCES REDUCED BELOW 80" SHALL HAVE A BARRIER TO WARN BLIND OR VISUALLY IMPAIRED.
4. HANDRAILS MAY PROTRUDE 4-1/2" MAX.

PROTRUDING OBJECTS - WHEN WALKING PARALLEL TO OBJ.

PROTRUDING OBJECTS

SCALE	
NTS	12

292428-2 STORY A0-11

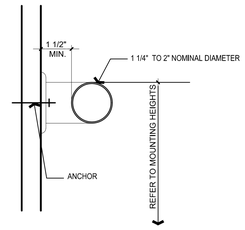

NOTES:

1. GRAB BAR AND MOUNTINGS TO WITHSTAND 250 POUNDS APPLIED IN ANY DIRECTION.
2. BAR SHALL NOT ROTATE IN FITTINGS.
3. GRAB BAR MOUNTED TO SURFACE FREE FROM SHARP OR ABRASIVE ELEMENTS. MOUNTING EDGES SHALL HAVE 1/8" MIN. RADIUS.

GRAB BARS

SCALE	
NTS	8

292428-2 STORY A0-11

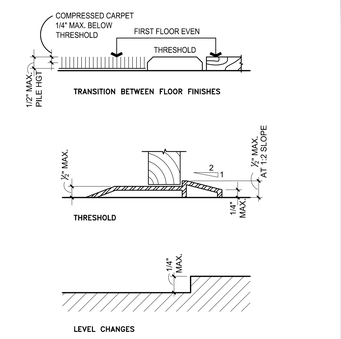

NOTES:
1. CARPET OR CARPET TILE SHALL BE SECURELY ATTACHED, EXPOSED EDGE OF CARPET SHALL BE FASTENED TO FLOOR AND HAVE TRIM ALONG THE ENTIRE LENGTH OF EXPOSED EDGE.

THRESHOLD

SCALE	
NTS	4

292428-2 STORY A0-11

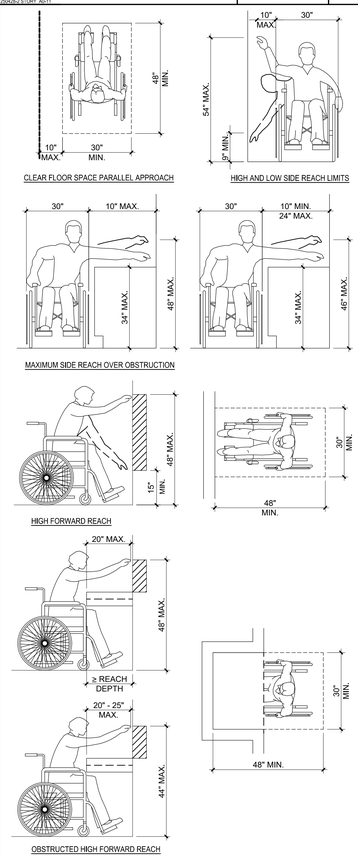

ACCESSIBLE REACH RANGES

SCALE	
NTS	18

292428-2 STORY A0-11

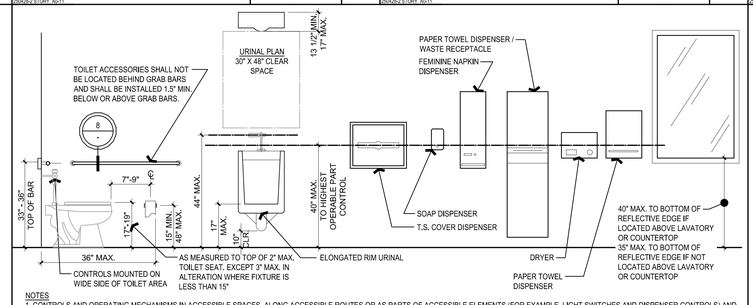

NOTES
1. CONTROLS AND OPERATING MECHANISMS IN ACCESSIBLE SPACES, ALONG ACCESSIBLE ROUTES OR AS PARTS OF ACCESSIBLE ELEMENTS (FOR EXAMPLE, LIGHT SWITCHES AND DISPENSER CONTROLS) AND THOSE REQUIRED TO BE ACCESSIBLE BY SECTION 11B-308 SHALL COMPLY WITH THE REQUIREMENTS OF THIS SECTION.
2. CLEAR FLOOR SPACE COMPLYING WITH DETAIL 9 THAT ALLOWS A FORWARD OR PARALLEL APPROACH BY A PERSON USING A WHEEL CHAIR SHALL BE PROVIDED AT CONTROLS, DISPENSERS, RECEPTACLES AND OTHER OPERABLE EQUIPMENT.
3. THE HIGHEST OPERABLE PART OF ALL CONTROLS, DISPENSERS, RECEPTACLES AND OTHER OPERABLE EQUIPMENT SHALL BE PLACED WITHIN AT LEAST ONE OF THE REACH RANGES SPECIFIED IN SECTION 11B-308.
4. CONTROLS AND OPERATING MECHANISM SHALL BE OPERABLE WITH ONE HAND AND SHALL NOT REQUIRE TIGHT GRASPING, PINCHING OR TWISTING OF THE WRIST. THE FORCE REQUIRED TO ACTIVATE CONTROLS SHALL BE NO GREATER THAN 5 LBS OF FORCE.

TYPICAL MOUNTING HEIGHTS

SCALE	
NTS	11

292428-2 STORY A0-11

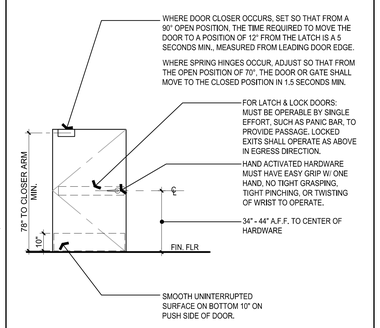

DOORS ON ACCESSIBLE ROUTE

SCALE	
NTS	6

292428-2 STORY A0-11

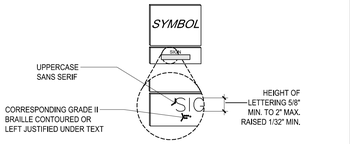

NOTES:

1. LETTERS AND NUMBERS ON SIGNS SHALL HAVE A WIDTH-TO-HEIGHT RATIO OF BETWEEN 3:5 AND 1:1 AND A STROKE WIDTH-TO-HEIGHT RATIO BETWEEN 1:5 AND 1:10.
2. MOUNTING LOCATION ALLOWS A PERSON TO APPROACH WITHIN 3" OF THE SIGNAGE WITHOUT ENCOUNTERING PROTRUDING OBJECTS OR STANDING WITHIN THE SWING OF A DOOR.
3. CHARACTERS AND NUMBERS ON SIGNS SHALL BE SIZED ACCORDING TO THE VIEWING DISTANCE FROM WHICH THEY ARE TO BE READ. THE MINIMUM HEIGHT IS MEASURED USING AN UPPER CASE X. LOWER CASE CHARACTERS ARE PERMITTED FOR SIGNS SUSPENDED OR PROJECTED ABOVE THE FINISH FLOOR. THE MINIMUM CHARACTER HEIGHT SHALL BE 3".
4. CONTRACTED GRADE II BRAILLE SHALL BE USED WHEREVER BRAILLE SYMBOLS ARE SPECIFICALLY REQUIRED IN OTHER PORTIONS OF THESE REGULATIONS. DOTS SHALL BE 1/10" ON CENTER IN EACH CELL WITH 3/10" SPACE BETWEEN DOTS IN ADJACENT CELLS. DOTS SHALL BE RAISED A MINIMUM OF 1/40" ABOVE THE BACKGROUND. MAX. 1/27". DISTANCE BETWEEN CORRESPONDING CELLS BELOW SHALL BE 0.395" TO 0.4".
5. SIGNS ARE INSTALLED ON THE WALL ADJACENT TO THE LATCH SIDE OF THE DOOR (AT DOUBLE LEAF DOORS AND WHEN THERE IS NO WALL SPACE AT THE LATCH SIDE, SIGNS SHALL BE PLACED ON THE NEAREST ADJACENT WALL, PREFERABLY ON THE RIGHT).
6. CHARACTER WIDTH TO HEIGHT RATIO BETWEEN 3:5 AND 1:1 WITH A 1:5 AND 1:10 STROKE WIDTH TO HEIGHT RATIO.

BRAILLE SIGNAGE REQUIREMENTS

SCALE	
NTS	3

292428-2 STORY A0-11

ACCESSIBLE DOOR REQUIREMENTS

SCALE	
NTS	5

292428-2 STORY A0-11

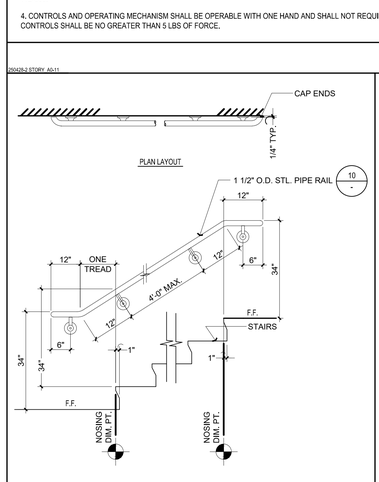

WALL MOUNTED RAILING

SCALE	
NTS	14

292428-2 STORY A0-11

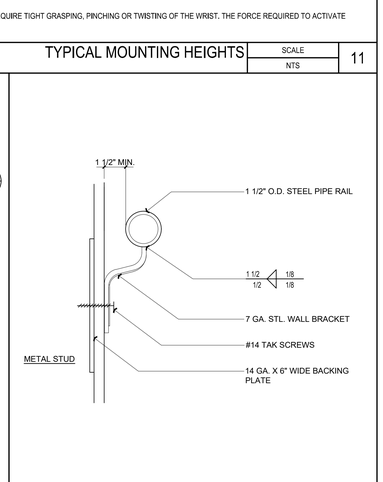

WALL MOUNTED RAILING

SCALE	
NTS	10

292428-2 STORY A0-11

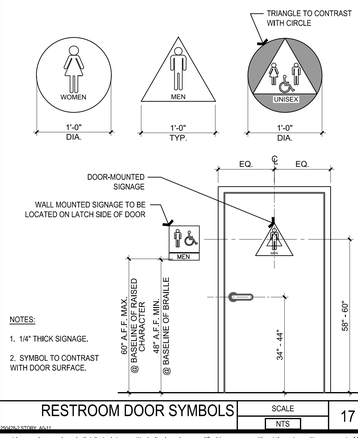

NOTES:

1. 1/4" THICK SIGNAGE.
2. SYMBOL TO CONTRAST WITH DOOR SURFACE.

RESTROOM DOOR SYMBOLS

SCALE	
NTS	17

292428-2 STORY A0-11

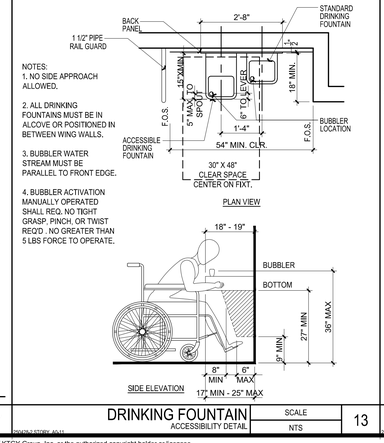

NOTES:
1. NO SIDE APPROACH ALLOWED.
2. ALL DRINKING FOUNTAINS MUST BE IN ALCOVE OR POSITIONED IN BETWEEN WING WALLS.
3. BUBBLER WATER STREAM MUST BE PARALLEL TO FRONT EDGE.
4. BUBBLER ACTIVATION MANUALLY OPERATED SHALL REQ. NO TIGHT GRASP, PINCH, OR TWIST REQ'D . NO GREATER THAN 5 LBS FORCE TO OPERATE.

DRINKING FOUNTAIN ACCESSIBILITY DETAIL

SCALE	
NTS	13

292428-2 STORY A0-11

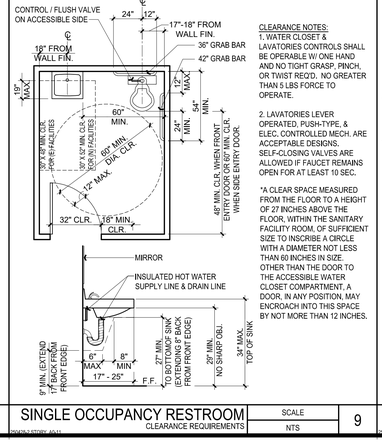

CLEARANCE NOTES:
1. WATER CLOSET & LAVATORIES CONTROLS SHALL BE OPERABLE W/ ONE HAND AND NO TIGHT GRASP, PINCH, OR TWIST REQ'D., NO GREATER THAN 5 LBS FORCE TO OPERATE.
2. LAVATORIES LEVER OPERATED, PUSH-TYPE, & ELEC. CONTROLLED MECH. ARE ACCEPTABLE DESIGNS. SELF-CLOSING VALVES ARE ALLOWED IF FAUCET REMAINS OPEN FOR AT LEAST 10 SEC.

*A CLEAR SPACE MEASURED FROM THE FLOOR TO A HEIGHT OF 27 INCHES ABOVE THE FLOOR, WITHIN THE SANITARY FACILITY ROOM, OF SUFFICIENT SIZE TO INSCRIBE A CIRCLE WITH A DIAMETER NOT LESS THAN 60 INCHES IN SIZE. OTHER THAN THE DOOR TO THE ACCESSIBLE WATER CLOSET COMPARTMENT, A DOOR, IN ANY POSITION, MAY ENCROACH INTO THIS SPACE BY NOT MORE THAN 12 INCHES.

SINGLE OCCUPANCY RESTROOM CLEARANCE REQUIREMENTS

SCALE	
NTS	9

292428-2 STORY A0-11

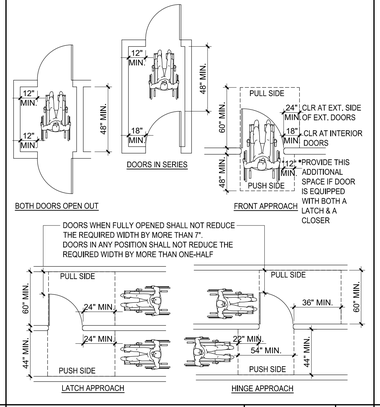

ACCESSIBLE DOOR REQUIREMENTS

SCALE	
NTS	5

292428-2 STORY A0-11

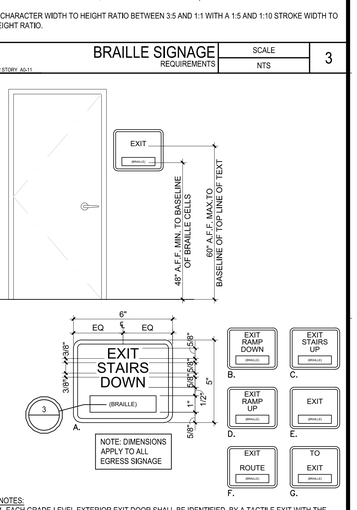

NOTES:
1. EACH GRADE-LEVEL EXTERIOR EXIT DOOR SHALL BE IDENTIFIED BY A TACTILE EXIT WITH THE WORD, "EXIT", RAISED CHARACTERS SHALL BE 1/32" MIN. ABOVE BACKGROUND, UPPER CASE, SANS SERIF.

2. EACH EXIT DOOR THAT LEADS DIRECTLY TO A GRADE-LEVEL EXTERIOR EXIT BY MEANS OF A STAIRWAY OR RAMP SHALL BE IDENTIFIED BY A TACTILE EXIT SIGN WITH THE FOLLOWING WORDS AS APPROPRIATE:

A. "EXIT STAIR DOWN"
B. "EXIT RAMP DOWN"
C. "EXIT STAIR UP"
D. "EXIT RAMP UP"
E. "EXIT"
F. "EXIT ROUTE"
G. "TO EXIT"

3. EACH EXIT DOOR THAT LEADS DIRECTLY TO A GRADE-LEVEL EXTERIOR EXIT BY MEANS OF AN EXIT ENCLOSURE OR AN EXIT PASSAGEWAY SHALL BE IDENTIFIED BY A TACTILE EXIT SIGN WITH THE WORDS, "EXIT ROUTE".

4. EACH EXIT ACCESS DOOR FROM AN INTERIOR ROOM OR AREA TO A CORRIDOR OR HALLWAY THAT IS REQUIRED TO HAVE A VISUAL EXIT SIGN, SHALL BE IDENTIFIED BY A TACTILE EXIT SIGN WITH THE WORDS, "EXIT ROUTE".

5. EACH EXIT DOOR THROUGH A HORIZONTAL EXIT SHALL BE IDENTIFIED BY A SIGN WITH THE WORDS, "TO EXIT".

6. THE CHARACTERS AND BACKGROUND SHALL HAVE A MATTE FINISH AND THE COLOR SHALL CONTRAST WITH THE COLOR ON WHICH IT IS MOUNTED.

7. THE CONTRACTOR SHALL MAKE A SUBMITTAL FOR APPROVAL BY THE AHJ..

8. SIGNS ARE INSTALLED ON THE WALL ADJACENT TO THE LATCH SIDE OF THE DOOR (AT DOUBLE LEAF DOORS AND WHEN THERE IS NO WALL SPACE AT THE LATCH SIDE, SIGNS SHALL BE PLACED ON THE NEAREST ADJACENT WALL, PREFERABLY ON THE RIGHT).

9. CHARACTER WIDTH TO HEIGHT RATIO BETWEEN 3:5 AND 1:1 WITH A 1:5 AND 1:10 STROKE WIDTH TO HEIGHT RATIO.

10. MOUNTING LOCATION MUST ALLOW A CLEAR FLOOR SPACE LEADING UP TO SIGN OF 18 INCHES WIDE BY 18 INCHES LONG CENTERED ON THE SIGN WHICH IS OUTSIDE THE ARC OF ANY DOOR SWING FROM THE CLOSED 45° POSITION.

11. THE SIGN MUST BE CENTERED A MINIMUM OF 9 INCHES AWAY FROM THE LATCH SIDE EDGE OF THE DOOR.

BRAILLE SIGNAGE MOUNTING HEIGHTS

SCALE	
NTS	1

292428-2 STORY A0-11

ktgy

17911 Von Karman Ave.
Suite 200
Irvine, CA 92614
ktgy.com
949.851.2133

ktgy Project Number	20250428
Contact	DORINA WATSON
Email	dwatson@ktgy.com
Senior Director	DAVID SCHMITZ
Designer	RUSSEL ROSALES

Developer
SEDC
23906 SOBOBA ROAD
SAN JACINTO, CA 92581

PHONE: (951) 663-2058

SOBOBA SOVOVATUM VILLAGE PHASE-2

SAN JACINTO, CA

No.	DATE	DESCRIPTION

Client is responsible for notifying architect in writing for any discovered errors or omissions in the plans and specifications during construction of the project. Failure for Client to notify Architect of any known errors or omissions in the plans or specifications, and proceeding with constructing the portion of work shown in the plans or specifications containing known errors or omissions shall be a waiver by Client for any liability of Architect for such known errors or omissions. Client releases Architect for any liability for such portions of work, and Architect shall not be liable for any delay damages, change orders, repair costs, removal or demolition costs, or replacement of any such portions of work.

INTERIOR ACCESSIBILITY DETAILS

2026-05-26, ISSUED FOR BID

A0-11

Revised: 1/7/2026 4:20:06 PM

COPYRIGHT 2024 KTGY GROUP INC. These plans and specifications are protected by United States copyright law and may not be used, reproduced, distributed, transmitted, displayed, or modified in any way without the prior written consent of KTGY Group, Inc. or the authorized copyright holder or licensee.

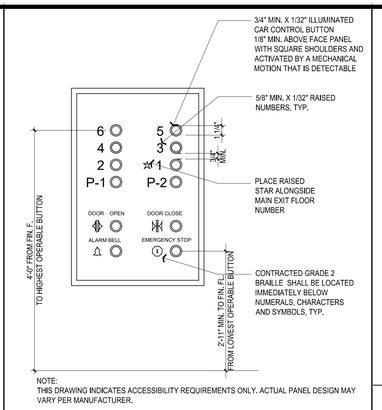

NOTE:
THIS DRAWING INDICATES ACCESSIBILITY REQUIREMENTS ONLY. ACTUAL PANEL DESIGN MAY VARY PER MANUFACTURER.

CONTROL PANEL | SCALE 1-1/2"=1'-0" | 12

250428-2 STORY A0-12

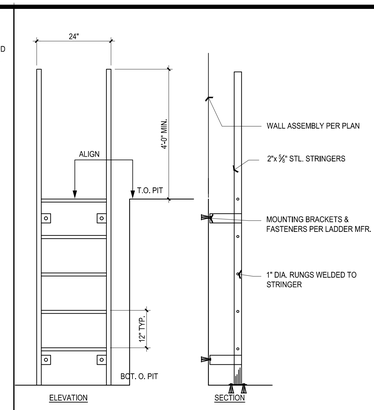

ELEVATOR PIT LADDER | SCALE 1-1/2"=1'-0" | 8

250428-2 STORY A0-12

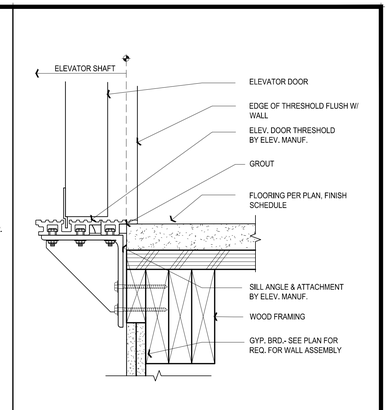

ELEVATOR SILL @ INTERIOR | SCALE 1-1/2"=1'-0" | 4

250428-2 STORY A0-12

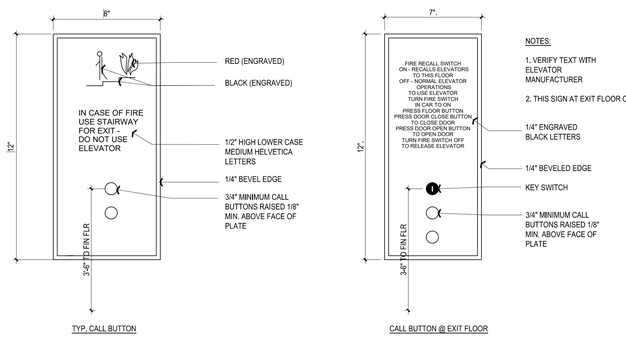

NOTES:

1. VERIFY TEXT WITH ELEVATOR MANUFACTURER
2. THIS SIGN AT EXIT FLOOR ONLY

CALL BUTTON DETAIL | SCALE 1-1/2"=1'-0" | 7

250428-2 STORY A0-12

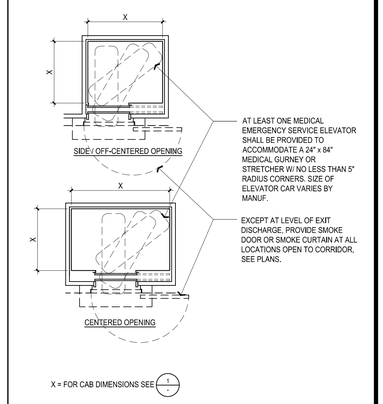

TYP. ELEVATOR PLAN | SCALE 1-1/2"=1'-0" | 3

250428-2 STORY A0-12

INTERNATIONAL SYMBOL FOR EMERGENCY MEDICAL SERVICES (STAR OF LIFE) SHALL BE PERMANENTLY ATTACHED TO EACH SIDE OF THE GURNEY/ STRETCHER ELEVATOR HOISTWAY DOOR FRAME ON THE PORTION OF THE FRAME AT RIGHT ANGLES TO THE LANDING OR HALLWAY AREA.

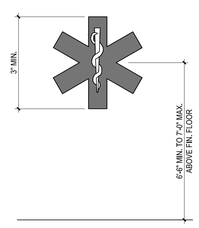

STAR OF LIFE | SCALE 1-1/2"=1'-0" | 10

250428-2 STORY A0-12

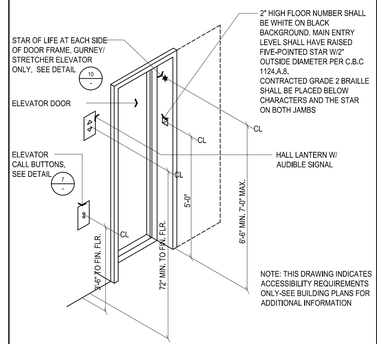

NOTE: THIS DRAWING INDICATES ACCESSIBILITY REQUIREMENTS ONLY-SEE BUILDING PLANS FOR ADDITIONAL INFORMATION

ELEVATOR LOBBY ACCESS | SCALE 1-1/2"=1'-0" | 6

250428-2 STORY A0-12

1. ELEVATORS SHALL COMPLY WITH ALL FEFERAL, STATE AND LOCAL CODE REQUIREMENTS, INCLUDING BUT NOT LIMITED TO CBC 1124 FOR ACCESSIBILITY AND CBC CHAPTER 30, ELEVATORS.
2. ELEVATOR SHALL BE SELF-LEVELING TO WITHIN 1/2" OF THE FLOOR LANDINGS UNDER NORMAL LOADING AND UNLOADING CONDITIONS.THE SELF-LEVELING SHALL, WITHIN ITS ZONE, BE ENTIRELY AUTOMATIC AND INDEPENDANT OF THE OPERATING DEVICE AND SHALL CORRECT THE OVER-TRAVEL OR UNDER-TRAVEL. THE CAR SHALL ALSO BE MAINTAINED APPROXIMATELY LEVEL WITH THE LANDING IRRESPECTIVE OF THE LOAD. THE CLEARANCE BETWEEN THE CAR PLATFORM SILL AND THE EDGE OF THE HOISTWAY LANDING SHALL BE NO GREATER THAN 1-1/4".
3. DOOR SIZE AND CAR PLATFORM SHALL HAVE MINIMUM CLEAR DISTANCES AS INDICATED IN THE TABLE BELOW.
4. MINIMUM ONE OF THE ELEVATORS PROVIDED SHALL HAVE A CAR DIMENSIONS THAT SHALL ACCOMMODATE A 24" X 84" AMBULANCE GURNEY OR STRETCHER WITH NOT LESS THAN 5" RADIUS CORNERS, IN THE HORIZONTAL, OPEN POSITION.
5. SUPPORT RAIL SHALL BE PROVIDED (1 MINIMUM) ON ONE WALL OF THE CAR (REAR PREFERRED). TOP OF SUPPORT RAIL SHALL BE 31" MIN., 33" MAX. HEIGHT FROM THE FLOOR AND SHALL BE MINIMUM 1-1/2" CLEARANCE FROM THE WALL. HANDRAIL SHALL BE SMOOTH, NO SHARP EDGES.
6. REFER TO INTERIOR DESIGN DRAWINGS FOR CAR INTERIOR FINISHES
7. THE MINIMUM ILLUMINATION AT THE CAR CONTROLS, THRESHOLD AND THE LANDING WHEN THE CAR AND LANDING DOORS ARE OPEN SHALL NOT BE LESS THAN 5 FOOT CANDLES.
8. OBJECTS ADJACENT TO AND BELOW HALL CALL BUTTONS SHALL NOT PROJECT MORE THAN 4".
9. AUDIBLE SIGNAL SOUNDS SHALL BE ONCE FOR UP DIRECTION AND TWICE FOR DOWN DIRECTION (OR EQUIVALENT)
10. CONTROLS AND EMERGENCY EQUIPMENT IDENTIFIED BY RAISED LETTERS & SYMBOLS SHALL INCLUDE, BUT NOT BE LIMITED TO, DOOR OPEN, DOOR CLOSE, ALARM BELL, EMERGENCY STOP, AND TELEPHONE.
11. COMPARTMENT DOORS FOR EMERGENCY COMMUNICATION DEVICES SHALL BE LEVER TYPE AND SHALL NOT REQUIRE GRASPING, PINCHING OR TWISTING OF THE WRIST TO OPERATE.
12. ALL CHARACTER AND SYMBOL BUTTONS SHALL BE DESIGNATED BY A 5/8" MINIMUM RAISED CHARACTERS AND STANDARD RAISED SYMBOLS AS DESCRIBED IN 1124.3.3.2. GRADE 2 BRAILLE SYMBOLS SHALL BE LOCATED IMMEDIATELY BELOW THE RAISED CHARACTERS.
13. PROVIDE ELEVATOR HOISTWAY VENTING PER CBC 3004: 3% OF THE AREA OF THE HOISTWAY OR .5 SQ. FT. FOR EACH CAR, WHICHEVER IS GREATER.
14. PROVIDE SMOKE-DETECTION ELEVATOR RECALL AT ELEVATOR ENTRANCE AREAS AND MACHINE ROOMS.
15. ELEVATOR HYDRAULIC LINE, WHEN USED, SHALL BE VIBRATION ISOLATED.
16. CONTRACTOR SHALL VERIFY SOIL/WATER TABLE CONDITIONS PER GEOTECHNICAL REPORT AND MAKE NECESSARY ACCOMMODATIONS FOR ELEVATOR INSTALLATION
17. CONTRACTOR SHALL VERIFY HOISTWAY AND ELEVATOR EQUIPMENT ROOM SIZES AND REQUIREMENTS WITH ELEVATOR MANUFACTURER PRIOR TO CONSTRUCTION.

ELEVATOR MINIMUM INSIDE CAR DIMENSIONS
VERIFY ACTUAL SIZE WITH JOB SPECIFIC MANUFACTURER

DOOR LOCATION	DOOR CLEAR WIDTH	INSIDE CAR, SIDE TO SIDE	INSIDE CAR, BACK WALL TO FRONT RETURN	INSIDE CAR, BACK WALL TO INSIDE FACE OF DOOR
CENTERED	42 INCHES	80 INCHES	51 INCHES	54 INCHES
SIDE / OFF CENTERED	36 INCHES	68 INCHES	51 INCHES	54 INCHES
ANY	36 INCHES	54 INCHES	80 INCHES	80 INCHES
ANY	36 INCHES	60 INCHES	60 INCHES	60 INCHES
CENTERED (GURNEY)	48 INCHES	94 INCHES	65 INCHES	67 INCHES
SIDE/OFF CENTERED (GURNEY)	42 INCHES	82 INCHES	65 INCHES	67 INCHES

ELEVATOR NOTES | SCALE 1-1/2"=1'-0" | 1

250428-2 STORY A0-12

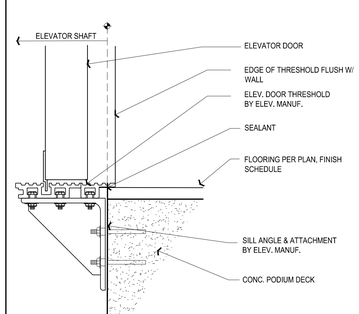

ELEVATOR SILL @ CONCRETE | SCALE 1-1/2"=1'-0" | 13

250428-2 STORY A0-12

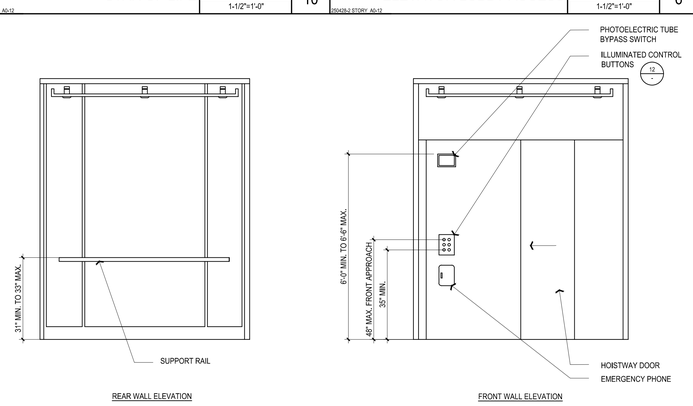

ELEVATOR CAR ELEVATIONS | SCALE 1-1/2"=1'-0" | 5

250428-2 STORY A0-12

ktgy

17911 Von Karman Ave.
Suite 200
Irvine, CA 92614
ktgy.com
949.851.2133

ktgy Project Number	20250428
Contact	DORINA WATSON
Email	dwatson@ktgy.com
Senior Director	DAVID SCHMITZ
Designer	RUSSEL ROSALES

Developer
SEDC
23906 SOBOBA ROAD
SAN JACINTO, CA 92581

PHONE: (951) 663-2058

SOBOBA SOVOVATUM VILLAGE PHASE-2

SAN JACINTO, CA

No.	DATE	DESCRIPTION

Client is responsible for notifying architect in writing for any discovered errors or omissions in the plans and specifications during construction of the project. Failure for Client to notify Architect of any known errors or omissions in the plans or specifications, and proceeding with constructing the portion of work shown in the plans or specifications containing known errors or omissions shall be a waiver by Client for any liability of Architect for such known errors or omissions. Client releases Architect for any liability for such portions of work, and Architect shall not be liable for any delay damages, change orders, repair costs, removal or demolition costs, or replacement of any such portions of work.

ELEVATOR ACCESSIBILITY INFORMATION

2026-05-26, ISSUED FOR BID

A0-12

Plotted: 1/7/2026 4:29:08 PM

COPYRIGHT 2024 KTGY GROUP INC. These plans and specifications are protected by United States copyright law and may not be used, reproduced, distributed, transmitted, displayed, or modified in any way without the prior written consent of KTGY Group, Inc. or the authorized copyright holder or licensee.

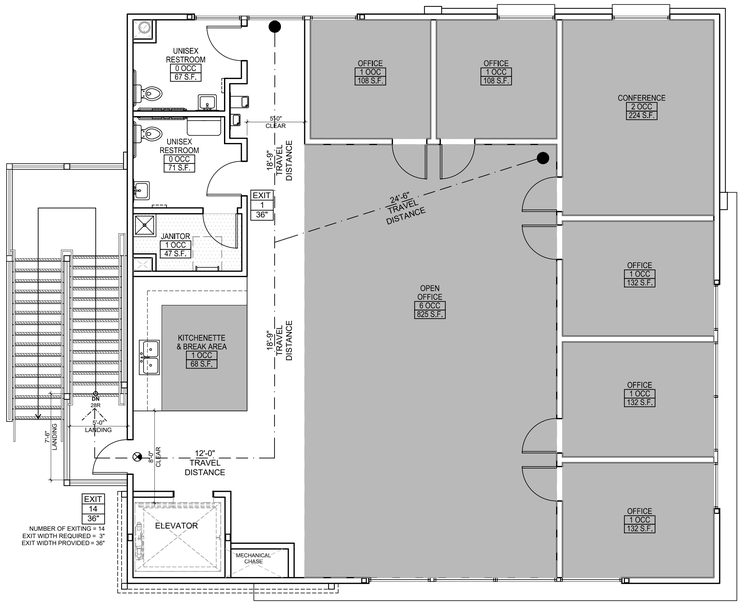

CODE COMPLIANCE - SECOND FLOOR | SCALE: 3/16"=1'-0" | 2

GENERAL NOTES

1. PROVIDE WORK IN COMPLIANCE WITH APPLICABLE CODES AND GOVERNING AGENCIES. MAINTAIN AT THE PROJECT SITE A COPY OF APPLICABLE EDITIONS OF ALL CODES, ORDINANCES AND STANDARDS INDICATED IN THE CONSTRUCTION DOCUMENTS.
2. PROVIDE WALKS AND SIDEWALKS WITH A CONTINUOUS SLIP RESISTANT SURFACE. PROVIDE WALKS WITH 5% MAXIMUM SLOPE IN THE DIRECTION OF TRAVEL AND 2% MAXIMUM CROSS SLOPE. PROVIDE ROUTE WITHOUT ANY ABRUPT VERTICAL CHANGES EXCEEDING 1/2" BEVELED AT 1:2 MAXIMUM SLOPE. REFER TO LANDSCAPE DRAWINGS FOR PAVING FINISHES. REFER TO CIVIL DRAWINGS FOR GRADES AND SLOPES.
3. PROVIDE ACCESSIBLE EMPLOYEE WORK STATIONS IN QUANTITY EQUAL TO 5% MIN. OF THE TOTAL OF ALL EMPLOYEE WORKSTATIONS AND NOT LESS THAN 1 OF EACH TYPE.
4. DIMENSIONS AND AREAS SHOWN ON THIS DRAWING ARE FOR BUILDING DEPARTMENT AND CODE JUSTIFICATION ONLY. DO NOT USE THESE DIMENSIONS AND AREAS FOR ESTIMATING, CONSTRUCTION, LEASING, OR SALES PURPOSES.
5. FOR CONSTRUCTION OF FIRE RATED ASSEMBLIES REFER TO FIRE RATED ASSEMBLY SCHEDULE.
6. FOR FIRE RATED DOOR ASSEMBLIES REFER TO DOOR SCHEDULE. - A7-11
7. FOR ACCESSIBILITY REQUIREMENTS SEE DRAWINGS. - A0-11

SYMBOLS

- PROPERTY LINE
- PATH OF EGRESS
- ACCESSIBLE PATH OF TRAVEL; 2% MAX SLOPE IN DIRECTION OF TRAVEL; 0.5% MAX CROSS SLOPE
- NEW BUILDING PER PLANS
- EXIT — EXIT TAG
- --- — NUMBER OF OCCUPANTS EXITING
- 0" — PROVIDE WIDTH OF COMPONENT
- NON-RATED FRAMED PARTITION
- "EXIT" SIGN - REFER ELECTRICAL DWG'S

BUILDING SUMMARY

BUILDING CODE:

2024 INTERNATIONAL BUILDING CODE
2024 INTERNATIONAL ENERGY CONSERVATION CODE
2024 UNIFORM MECHANICAL CODE
2024 NATIONAL ELECTRICAL CODE
2024 UNIFORM PLUMBING CODE
2024 INTERNATIONAL FIRE CODE
2024 CALIFORNIA GREEN BUILDING STANDARDS CODE (CALGREEN CODE), TITLE 24 C.C.R.
TITLE 24 C.C.R.

ALLOWABLE HEIGHT AND BUILDING AREAS:

USER GROUP:	"A-2" CASINO, "B" & "M"
CONSTRUCTION TYPE:	V-B
ALLOWABLE BUILDING HEIGHT:	40'-0" MAX.
ALLOWABLE NUMBER OF STORIES:	2
ACTUAL BUILDING HEIGHT:	40'-0" MAX.
ACTUAL NUMBER OF STORIES:	2
ACTUAL GROSS AREA OF BUILDING:	**5,100 S.F.**
+ TOTAL BUILDING FOR LEVEL 1:	2,550 S.F.
+ TOTAL BUILDING FOR LEVEL 2:	2,550 S.F.

FIRE-RESISTANCE RATING

2024 IBC TABLE 601 FOR BUILDING ELEMENTS (HOUR)

CONST. TYPE	STRUCT. FRAME	BEARING WALLS		NON-BEARING WALL	FLOOR CONST.	ROOF CONST.
		INT.	EXT.			
V-B	0 HR	0 HR	0 HR	0 HR	0 HR	0 HR

2024 IBC TABLE 705.5 FOR EXTERIOR WALLS BASED ON FIRE SEPARATION DISTANCE

OCCUPANCY	TYPE OF CONSTRUCT.	FIRE SEPARATION DISTANCE = X (feet)	EXTERIOR WALL RATING REQUIREMENT
A, B & M	VB	10 < X < 30	0

+ 2-STORY BUILDING - LEVEL 1

OCCUPANT LOAD:

MAXIMUM FLOOR AREA ALLOWANCES PER OCCUPANT

ASSEMBLY GAMING FLOOR	11 S.F./ OCCUPANT
BUSINESS AREA	150 S.F./ OCCUPANT
ACCESSORY STORAGE AREA	300 S.F./ OCCUPANT
ANCILLARY AREA (HALL, RESTROOMS, WALLS)	0 S.F./ OCCUPANT

BUILDING OCCUPANCY BREAKDOWN (2024 IBC TABLE 1004.5)
GROSS AREA OF BUILDING: 2,550 S.F.

FUNCTION OF SPACE	CALCULATION	ALLOWABLE
GAMING AREA (A2) OCC.	1,586 S.F./11 S.F. PER OCC.	145 OCCUPANT
OFFICE AREA (B) OCC.	157 S.F./150 S.F. PER OCC.	2 OCCUPANT
STORAGE AREA (M) OCC.	102 S.F./300 S.F. PER OCC.	1 OCCUPANT
ANCILLARY AREA NO OCC.	705 S.F./0 S.F. (EXEMPT)	0 OCCPANT
TOTAL	2,550 S.F.	148 OCCUPANTS MALE (50%) = 74 FEMALE (50%) = 74

EGRESS REQUIREMENTS:

+ EXIT WIDTH REQUIRED FOR BUILDING:	148 OCC. X 0.20 = 29.6"
+ EXIT WIDTH PROVIDED FOR BUILDING:	72" + 36" = 108"
+ NUMBER OF EXITS REQUIRED:	2
+ NUMBER OF EXITS PROVIDED:	2
+ EXIT ACCESS TRAVEL DISTANCE:	250' MAX. TRAVEL DISTANCE
+ EXIT ACCESS TRAVEL DISTANCE PROVIDED:	LESS THAN 250' TRAVEL DISTANCE

PLUMBING FIXTURE REQUIREMENTS (2024 IPC TABLE 403.1):

ASSEMBLY CASINO GAMING BUILDING

PLUMBING FIXTURE (TYPE)	CALCULATION	REQUIRED #	PROVIDED #
MALE (50%) = 74			
FEMALE (50%) = 74			
+ WATER CLOSET (MEN)	1-100 OCC. (IPC 2024)	1	2
+ WATER CLOSET (WOMEN)	1- 50 OCC. (IPC 2024)	2	3
+ URINALS (MEN)	1-1000 OCC. (IPC 2024)	0	1
+ LAVATORIES (MEN)	1-250 OCC. (IPC 2024)	1	1
+ LAVATORIES (WOMEN)	1-250 OCC. (IPC 2024)	1	1
+ DRINKING FOUNTAIN	1 PER 1,000	1	2
+ SERVICE SINK		1	1

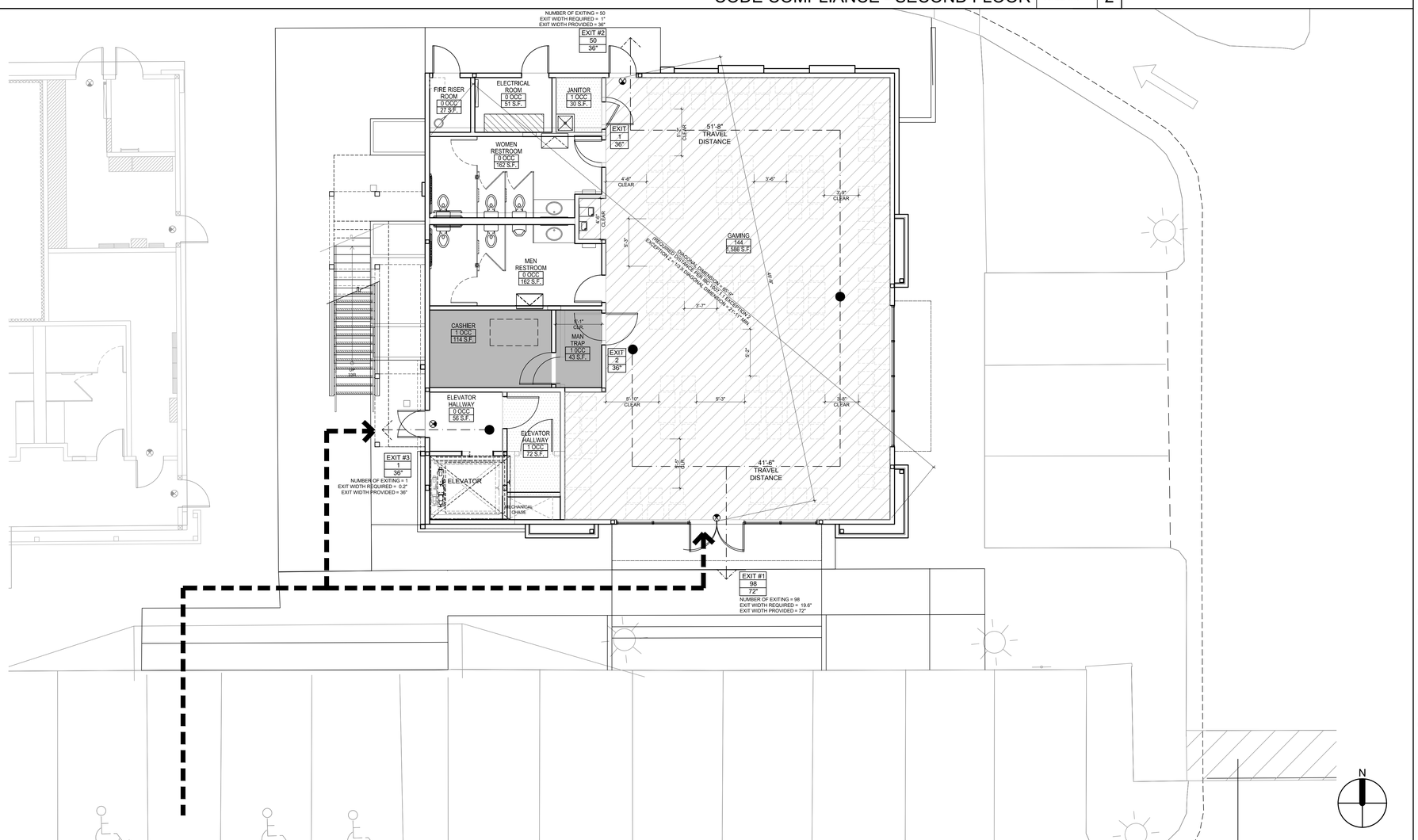

CODE COMPLIANCE - FIRST FLOOR | SCALE: 3/16"=1'-0" | 1

+ 2-STORY BUILDING - LEVEL 2

OCCUPANT LOAD:

MAXIMUM FLOOR AREA ALLOWANCES PER OCCUPANT

BUSINESS AREA	150 S.F./ OCCUPANT
ACCESSORY STORAGE AREA	300 S.F./ OCCUPANT
ANCILLARY AREA (HALL, RESTROOMS, WALLS)	0 S.F./ OCCUPANT

BUILDING OCCUPANCY BREAKDOWN (2024 IBC TABLE 1004.5)
GROSS AREA OF BUILDING: 2,550 S.F.

FUNCTION OF SPACE	CALCULATION	ALLOWABLE
OFFICE AREA (B) OCC.	1,729 S.F./150 S.F. PER OCC.	12 OCCUPANT
STORAGE AREA (M) OCC.	47 S.F./300 S.F. PER OCC.	1 OCCUPANT
ANCILLARY AREA NO OCC.	774 S.F./0 S.F. (EXEMPT)	0 OCCPANT
TOTAL	2,550 S.F.	13 OCCUPANTS MALE (50%) = 6.5 FEMALE (50%) = 6.5

EGRESS REQUIREMENTS:

+ EXIT WIDTH REQUIRED FOR BUILDING:	13 OCC. X 0.20 = 2.6"
+ EXIT WIDTH PROVIDED FOR BUILDING:	36"
+ NUMBER OF EXITS REQUIRED:	1 (IBC 2024 TABLE 1006.3.4)
+ NUMBER OF EXITS PROVIDED:	1
+ EXIT ACCESS TRAVEL DISTANCE:	75' MAX. TRAVEL DISTANCE
+ EXIT ACCESS TRAVEL DISTANCE PROVIDED:	LESS THAN 75' TRAVEL DISTANCE

PLUMBING FIXTURE REQUIREMENTS (2024 IPC TABLE 403.1):

ASSEMBLY CASINO GAMING BUILDING

PLUMBING FIXTURE (TYPE)	CALCULATION	REQUIRED #	PROVIDED #
MALE (50%) = 6.5			
FEMALE (50%) = 6.5			
+ WATER CLOSET (MEN)	1-100 OCC. (IPC 2024)	1	1
+ WATER CLOSET (WOMEN)	1- 50 OCC. (IPC 2024)	1	1
+ URINALS (MEN)	1-1000 OCC. (IPC 2024)	0	0
+ LAVATORIES (MEN)	1-250 OCC. (IPC 2024)	1	1
+ LAVATORIES (WOMEN)	1-250 OCC. (IPC 2024)	1	1
+ DRINKING FOUNTAIN	1 PER 1,000	1	2
+ SERVICE SINK		1	1

ktgy

17911 Von Karman Ave.
Suite 200
Irvine, CA 92614
ktgy.com
949.851.2133

ktgy Project Number 20250428
Contact DORINA WATSON
Email dwatson@ktgy.com
Senior Director DAVID SCHMITZ
Designer RUSSEL ROSALES

Developer
SEDC
23906 SOBOBA ROAD
SAN JACINTO, CA 92581

PHONE: (951) 663-2058

SOBOBA SOVOVATUM VILLAGE PHASE-2

SAN JACINTO, CA

No.	DATE	DESCRIPTION

Client is responsible for notifying architect in writing for any discovered errors or omissions in the plans and specifications during construction of the project. Failure for Client to notify Architect of any known errors or omissions in the plans or specifications, and proceeding with constructing the portion of work shown in the plans or specifications containing known errors or omissions shall be a waiver by Client for any liability of Architect for such known errors or omissions. Client releases Architect for any liability for such portions of work, and Architect shall not be liable for any delay damages, change orders, repair costs, removal or demolition costs, or replacement of any such portions of work.

2026-05-26, ISSUED FOR BID

CODE COMPLIANCE FLOOR PLANS

A0-21

Plotted: 1/7/2026 4:29:00 PM

COPYRIGHT 2024 KTGY GROUP INC. These plans and specifications are protected by United States copyright law and may not be used, reproduced, distributed, transmitted, displayed, or modified in any way without the prior written consent of KTGY Group, Inc. or the authorized copyright holder or licensee.

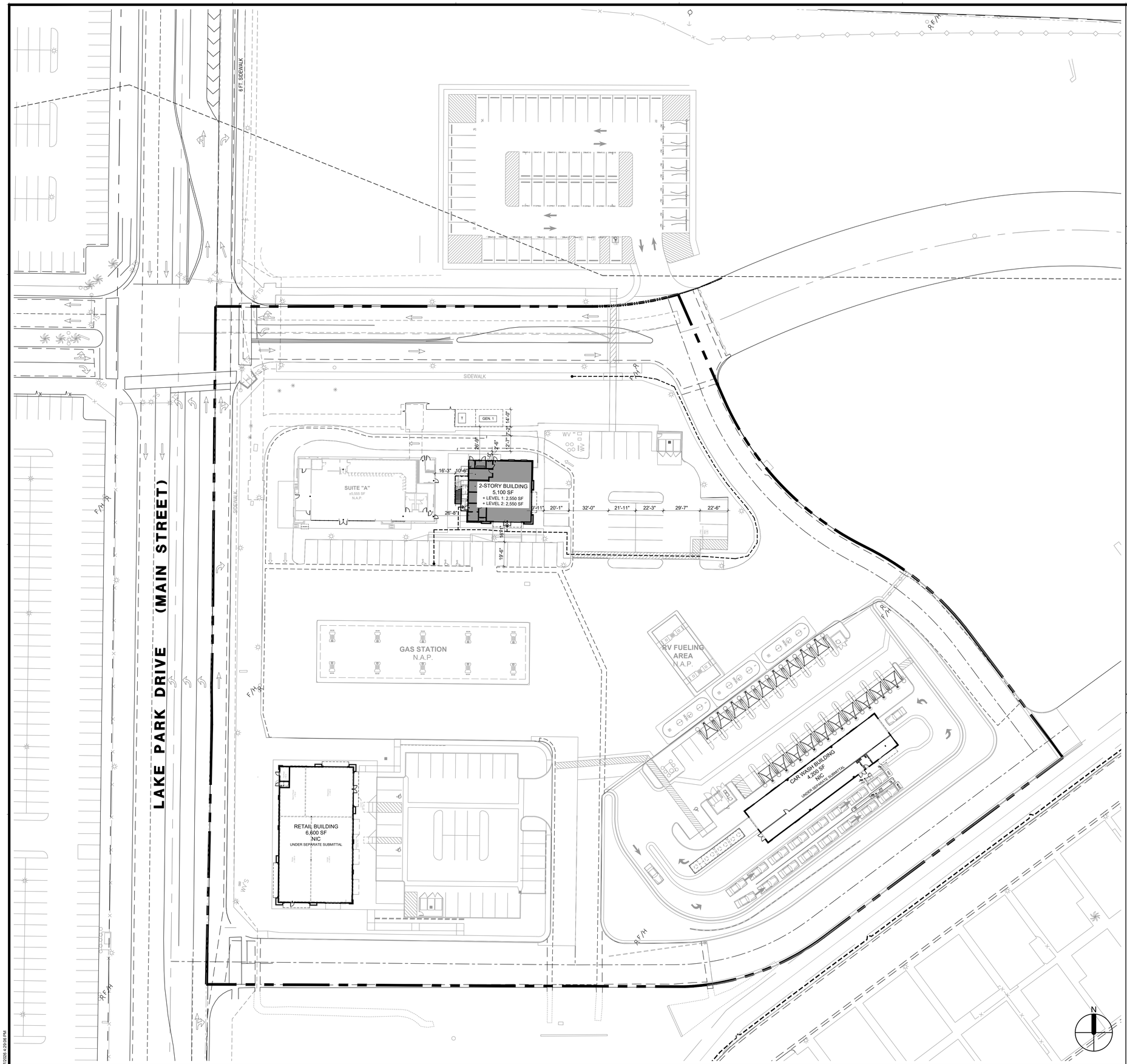

SITE PLAN (FOR REFERENCE ONLY) | SCALE: 1"=30' | 1

GENERAL NOTES

1. REFER TO GEOTECHNICAL REPORT BY____ DATED____ REPORT INDICATED FOR REFERENCE ONLY.
2. REFER TO MECHANICAL, PLUMBING & ELECTRICAL DRAWINGS FOR CONTINUATION OF UTILITIES INSIDE BUILDING.
3. PROVIDE WALKS AND SIDEWALKS WITH A CONTINUOUS SLIP RESISTANT SURFACE. PROVIDE WALKS WITH 5% MAXIMUM SLOPE IN THE DIRECTION OF TRAVEL AND 2% MAXIMUM CROSS SLOPE. PROVIDE ROUTE WITHOUT ANY ABRUPT VERTICAL CHANGES EXCEEDING 1/2" BEVELED AT 1:2 MAXIMUM SLOPE. SEE CIVIL AND LANDSCAPE PLANS FOR SPECIFIC FINISH TYPES & REQUIREMENTS UNDER SEPARATE SUBMITTAL.
4. COORDINATE EXPECTED DEPTHS OF ROUGH GRADING & EXCAVATION OPERATIONS WITH DEPTHS OF PROPOSED AND EXISTING UTILITIES TO REMAIN, PRIOR TO BID & START OF GRADING WORK.
5. PATCH REPAIR, AT NO ADDITIONAL COST OR TIME TO CONTRACT, ANY CONDITIONS DAMAGED, OUTSIDE LIMIT OF WORK, BEYOND PROPERTY LINE AND IN PUBLIC WAY, AS A RESULT OF THE WORK PERFORMED UNDER THIS CONTRACT IN A MANNER THAT WILL MATCH ADJACENT SURFACES.
6. PROVIDE ALL WORK NECESSARY FOR A COMPLETE PROJECT, INCLUDING ANY UTILITY ALTERATIONS AND CONNECTIONS, PAVEMENT MARKING, IRRIGATION AND LANDSCAPING WORK OUTSIDE OF PROJECT LIMITS, OUTSIDE PROPERTY LINE AND IN PUBLIC WAY.
7. SLOPE FINISH GRADE TO PROVIDE DRAINAGE AWAY FROM BUILDING, REFER TO CIVIL DRAWINGS.
8. GRADING, DRAINAGE, & CONSTRUCTION OPERATIONS SHALL COMPLY WITH ALL AGENCY REQUIRMENTS.
9. ENSURE THAT GRADED SURFACES USED FOR OFF STREET CONSTRUCTION PARKING, MATERIAL LAY-DOWN OR AWAITING FUTURE CONSTRUCTION ARE STABILIZED FOR DUST CONTROL.
10. COORDINATE ANY LANE CLOSURES OR DETOURS WITH AGENCIES. PROVIDE NECESSARY TRAFFIC CONTROL MEASURES TO MINIMIZE CONFLICTS BETWEEN CONSTRUCTION ACTIVITY AND OFF-SITE PEDESTRIAN AND VEHICULAR TRAFFIC.
11. COORDINATE STAGING & CONSTRUCTION OPERATION AREAS WITH SITE CONSTRAINTS PRIOR TO BID & START OF CONSTRUCTION. CONFINE OPERATIONS TO AREA OF SITE DEFINED BY PROPERTY LINES.
12. MAINTAIN JOBSITE IN A CLEAN, ORDERLY CONDITION, FREE OF DEBRIS AND LITTER. DO NOT UNREASONABLY ENCUMBER THE SITE WITH ANY MATERIAL OR EQUIPMENT.
13. FOR FINISH PAVING, IRRIGATION & PLANTING REQUIREMENTS, REFER TO LANDSCAPE DRAWINGS; UNDER SEPARATE SUBMITTAL.
14. FOR SITE WET UTILITIES, FINISH GRADE ELEVATIONS, FINISH FLOOR ELEVATIONS AND SITE WALL FOOTING & TOP WALL ELEVATIONS, REFER TO CIVIL DRAWINGS; UNDER SEPARATE SUBMITTAL.
15. VERIFY ON-SITE PARKING LAYOUT WITH CIVIL DRAWINGS. FOR PARKING SUMMARY REFER TO DRAWING; CIVIL DRAWINGS UNDER SEPARATE SUBMITTAL.
16. FOR ACCESSIBILITY REQUIREMENTS SEE CIVIL DRAWINGS UNDER SEPARATE SUBMITTAL.
17. FOR CODE COMPLIANCE INFORMATION REFER TO DRAWING; - A0-21
18. FOR GREEN CODE MANDATORY MEASURES REFER TO DRAWING; - A0-31
19. USE OF ABBREVIATIONS ARE NOT LIMITED TO THE ABBREVIATIONS LISTED ON THIS SHEET. FOR ADDITIONAL ABBREVIATIONS REFER TO SHEET; - A0-01

SYMBOLS & ABBREVIATIONS

EXISTING BUILDING TO REMAIN

NEW BUILDING

FH FIRE HYDRANT REFER TO CIVIL DRAWINGS

FD CONNECTION

PROPERTY LINE

LIMIT OF WORK

ACCESSIBLE PATHWAY

AC	ASPHALT CONCRETE	FS	FINISH SURFACE
AD	AREA DRAIN	HB	HOSE BIB
AGGR	AGGREGATE	PAV	PAVING
ASPH	ASPHALT	TC	TOP OF CURB
BLDG	BUILDING	TG	TOP OF GRATE
CB	CATCH BASIN	TO	TOP OF
CJ	CONTROL JOINT	TP	TOP OF PAVING
CO	CLEAN OUT	VAN	VAN ACCESSIBLE STALL
EJ	EXPANSION JOINT	WP	WORK POINT

ktgy

17911 Von Karman Ave.
Suite 200
Irvine, CA 92614
ktgy.com
949.851.2133

ktgy Project Number	20250428
Contact	DORINA WATSON
Email	dwatson@ktgy.com
Senior Director	DAVID SCHMITZ
Designer	RUSSEL ROSALES

Developer
SEDC
23906 SOBOBA ROAD
SAN JACINTO, CA 92581

PHONE: (951) 663-2058

SOBOBA SOVOVATUM VILLAGE PHASE-2

SAN JACINTO, CA

No.	DATE	DESCRIPTION

Client is responsible for notifying architect in writing for any discovered errors or omissions in the plans and specifications during construction of the project. Failure for Client to notify Architect of any known errors or omissions in the plans or specifications, and proceeding with constructing the portion of work shown in the plans or specifications containing known errors or omissions shall be a waiver by Client for any liability of Architect for such known errors or omissions. Client releases Architect for any liability for such portions of work, and Architect shall not be liable for any delay damages, change orders, repair costs, removal or demolition costs, or replacement of any such portions of work.

2026-05-26, ISSUED FOR BID

SITE PLAN

A1-10

Printed: 1/7/2026 4:29:06 PM

COPYRIGHT 2024 KTGY GROUP INC. These plans and specifications are protected by United States copyright law and may not be used, reproduced, distributed, transmitted, displayed, or modified in any way without the prior written consent of KTGY Group, Inc. or the authorized copyright holder or licensee.

SLAB PLAN KEYNOTES

1. SLAB ON GRADE / VAPOR BARRIER - REFER TO STRUCTURAL DRAWINGS
2. DEPRESSED SLAB AREA - REFER TO STRUCTURAL DRAWINGS
3. FLOOR DRAIN - REFER TO PLUMBING DRAWINGS
4. ELEVATOR PIT PER ELEVATOR MFR REQUIREMENTS. REFER TO STRUCTURAL DRAWINGS
5. EXTERIOR STAIR CONCRETE PAD AND FOOTING - REFER TO STRUCTURAL DRAWINGS
6. CONCRETE CURB - REFER STRUCTURAL DRAWINGS.

GENERAL NOTES

1. EXTEND DRAFTSTOPS THROUGH VOID SPACES.
2. OFFSET ALL IMMEDIATELY ADJACENT DOOR OPENINGS 4 INCHES FROM PERPENDICULAR WALL.
3. AT CURB CONDITIONS STRUCTURAL SHEATHING MAY OCCUR ON ONE SIDE OR BOTH SIDES OF WALL STUDS. REFER TO STRUCTURAL DRAWINGS FOR SHEAR WALL SHEATHING.
4. WHERE EXISTING SURFACES ARE TO BE FRAMED OR FURRED TO RECEIVE FINISHES, ENSURE THAT THE EXISTING SURFACES HAVE BEEN COMPLETELY CLEANED OF EXISTING MOLD, MILDEW, ADHESIVES, COATINGS, CONSTRUCTION MARKS AND SURFACE DIRT AND SURFACES HAVE BEEN MECHANICALLY CLEANED DOWN TO BARE SUBSTRATE PRIOR TO ENCLOSING OR APPLYING FRAMING AND FINISHES.
5. PATCH, REPAIR, INFILL AND SMOOTH OUT SURFACES WHERE ITEMS THAT HAVE BEEN REMOVED LEAVE HOLES.
6. WHERE DEMOLITION IS REQUIRED TO INSTALL NEW WORK, PATCH AND REPAIR ALL ASSEMBLIES AND SURFACES SO AS TO BE VISUALLY UNDETECTABLE IN PROFILE, LIFT, TEXTURE, COLOR AND TO MATCH ALL ADJACENT SURFACES. PROVIDE ALL STRUCTURAL AND COSMETIC MATERIALS TO COMPLETE WORK.
7. PROVIDE METAL ACCESS DOORS WHERE BUILDING ELEMENTS ARE LOCATED IN INACCESSIBLE CEILING & WALL SPACES. BUILDING ELEMENTS SPECIFICALLY REQUIRING ACCESS INCLUDE, BUT ARE NOT LIMITED TO FIRE/SMOKE DAMPERS, VOLUME DAMPERS, FILTERS, VALVES, ELECTRICAL JUNCTION BOXES, MOTORS, FIRE SPRINKLER HEADS, CONTROLS. PROVIDE ADDITIONAL ACCESS DOORS WHERE SHOWN OR SCHEDULED. PROVIDE FIRE RATED ACCESS DOORS IN FIRE RATED ASSEMBLIES EQUAL TO THE FIRE RATING OF THE ASSEMBLY.
8. FOR CODE COMPLIANCE INFORMATION REFER TO DRAWING; - A0-21
9. FOR ACCESSIBILITY REQUIREMENTS SEE DRAWINGS. - A0-11
10. FOR GREEN CODE MANDATORY MEASURES REFER TO DRAWING; - A0-31
11. USE OF ABBREVIATIONS ARE NOT LIMITED TO THE ABBREVIATIONS LISTED ON THIS SHEET. FOR ADDITIONAL ABBREVIATIONS REFER TO SHEET; - A0-01

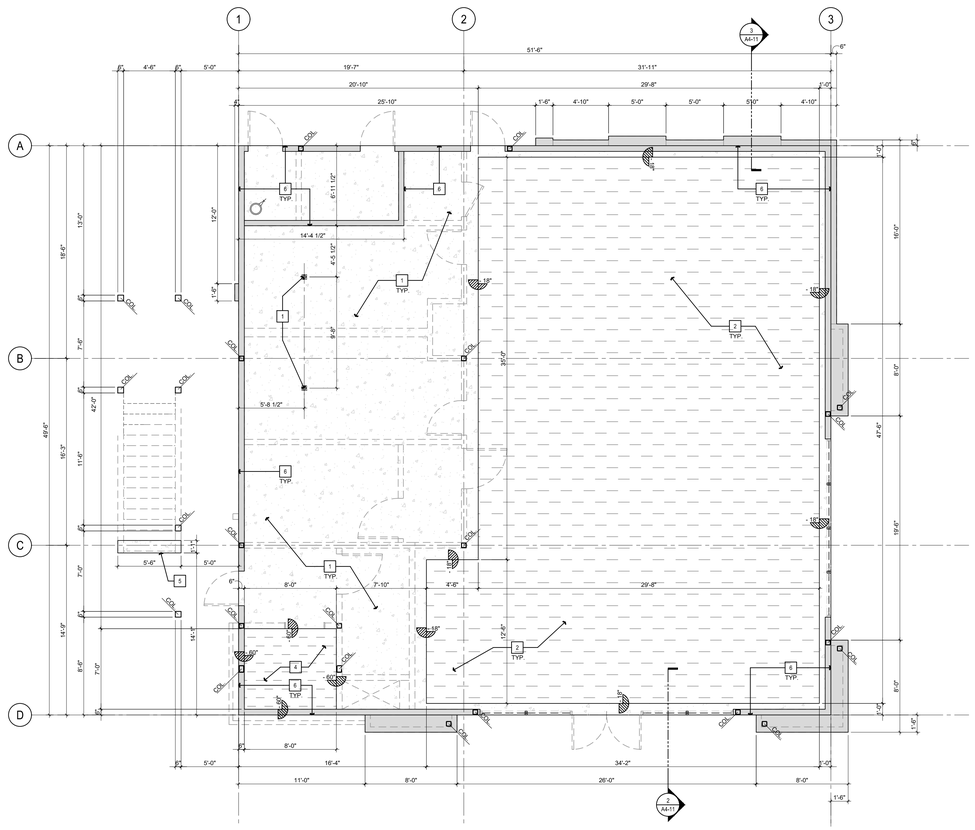

SLAB PLAN | SCALE: 3/16"=1'-0" | 1

SYMBOLS

DEPRESSED SLAB - REFER STRUCTURAL DWG'S

SLAB ON GRADE - REFER STRUCTURAL DWG'S

CONCRETE CURB - REFER STRUCTURAL DWG'S

℄	CENTERLINE	FOC	FACE OF CONCRETE
EOS	EDGE OF SLAB	FOM	FACE OF MASONRY
EQ.	EQUAL	FOW	FACE OF WALL
FE	FIRE EXTINGUISHER	RO	ROUGH OPENING
FOS	FACE OF STUD	WP	WORK POINT
FOF	FACE OF FINISH		

ktgy

17911 Von Karman Ave.
Suite 200
Irvine, CA 92614
ktgy.com
949.851.2133

ktgy Project Number	20250428
Contact	DORINA WATSON
Email	dwatson@ktgy.com
Senior Director	DAVID SCHMITZ
Designer	RUSSEL ROSALES

Developer
SEDC
23906 SOBOBA ROAD
SAN JACINTO, CA 92581

PHONE: (951) 663-2058

SOBOBA SOVOVATUM VILLAGE PHASE-2

SAN JACINTO, CA

No.	DATE	DESCRIPTION

Client is responsible for notifying architect in writing for any discovered errors or omissions in the plans and specifications during construction of the project. Failure for Client to notify Architect of any known errors or omissions in the plans or specifications, and proceeding with constructing the portion of work shown in the plans or specifications containing known errors or omissions shall be a waiver by Client for any liability of Architect for such known errors or omissions. Client releases Architect for any liability for such portions of work, and Architect shall not be liable for any delay damages, change orders, repair costs, removal or demolition costs, or replacement of any such portions of work.

2026-05-26, ISSUED FOR BID

SLAB PLAN

A2-10

Revised: 1/7/2026 4:29:06 PM

COPYRIGHT 2024 KTGY GROUP INC. These plans and specifications are protected by United States copyright law and may not be used, reproduced, distributed, transmitted, displayed, or modified in any way without the prior written consent of KTGY Group, Inc. or the authorized copyright holder or licensee.

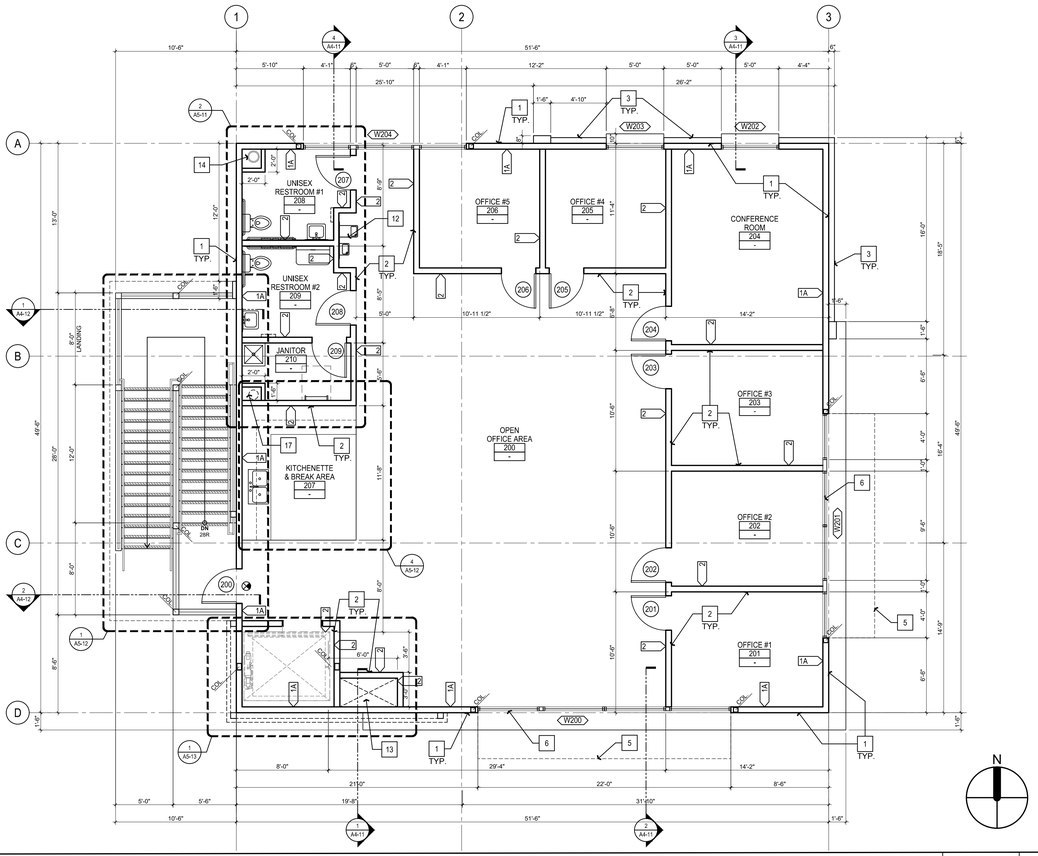

FLOOR PLAN - SECOND FLOOR

SCALE: 3/16"=1'-0" | 2

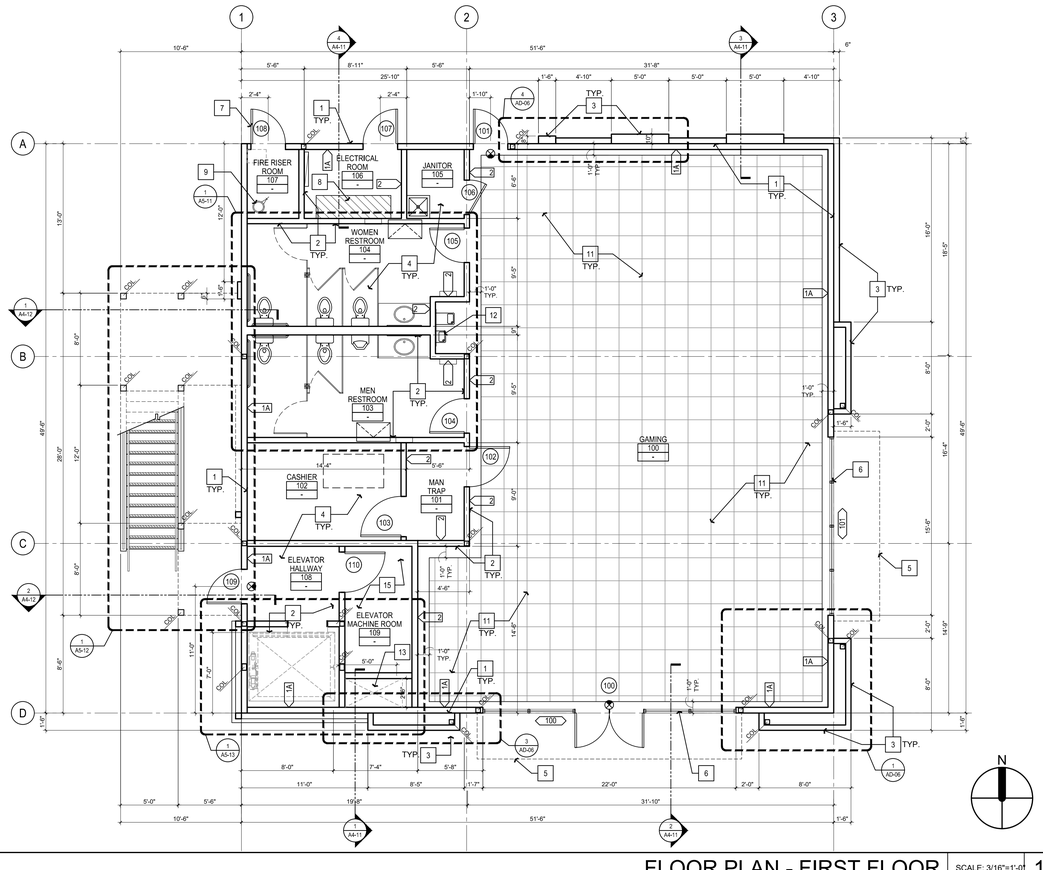

FLOOR PLAN - FIRST FLOOR

SCALE: 3/16"=1'-0" | 1

FLOOR PLAN KEYNOTES

1. EXTERIOR WALL WOOD FRAMING WITH BATT CAVITY INSULATION AND EXTERIOR RIGID CONTINUOUS INSULATION, TYP. - REFER STRUCTURAL DWG'S
2. INTERIOR WALL WOOD FRAMING - REFER STRUCTURAL DWG'S.
3. 2X FURRING WALL WOOD FRAMING, TYP. - REFER STRUCTURAL DWG'S.
4. CONCRETE SLAB - REFER STRUCTURAL DWG'S AND SOIL REPORT.
5. CANOPY ABOVE - REFER ELEVATIONS FOR FINISHES AND STRUCTURAL DWG'S.
6. ALUMINUM STOREFRONT SYSTEM - REFER ELEVATIONS FOR FINISHES AND DOOR SCHEDULES.
7. EXTERIOR METAL DOOR, PAINT - REFER ELEVATIONS FOR COLOR AND DOOR SCHEDULES.
8. ELECTRICAL SWITCHGEAR AND PHONE BOARD - REFER TO ELECTRICAL DWG'S.
9. FIRE RISER LOCATION - REFER CIVIL AND PLUMBING DWG'S.
10. GAS METER LOCATION - REFER TO PLUMBING DWG'S.
11. ACCESS FLOORING BY ASM MODULAR SYSTEMS, FS 100 INCLUDING PANELS, PEDESTALS, AND ACCESSORIES. COORDINATE POWER, DATA AND LOW VOLTAGE FLOOR BOXES WITH GAMING CONSULTANT. REFER TO FINISH PLAN AND SCHEDULE FOR ADDITIONAL INFORMATION.
12. HI-LOW DRINKING FOUNTAIN - REFER TO DETAIL -/A0.-- AND PLUMBING DWG'S AND SCHEDULE.
13. MECHANICAL CHASE - REFER TO MECHANICAL DWG'S.
14. PLUMBING RISER CHASE - REFER TO PLUMBING DWG'S.
15. ELEVATOR MACHINE ROOM PER ELEVATOR MANUFACTURER'S REQUIREMENTS. PROVIDE FIRE RATED ENCLOSED ROOM.
16. INTERIOR SIGNAGE, ADA - COMPLIANT ROOM IDENTIFICATION.
17. EXHAUST DUCT CHASE - REFER TO MECHANICAL DWG'S.

GENERAL NOTES

1. EXTEND DRAFTSTOPS THROUGH VOID SPACES.
2. OFFSET ALL IMMEDIATELY ADJACENT DOOR OPENINGS 4 INCHES FROM PERPENDICULAR WALL.
3. AT CURB CONDITIONS STRUCTURAL SHEATHING MAY OCCUR ON ONE SIDE OR BOTH SIDES OF WALL STUDS. REFER TO STRUCTURAL DRAWINGS FOR SHEAR WALL SHEATHING.
4. WHERE EXISTING SURFACES ARE TO BE FRAMED OR FURRED TO RECEIVE FINISHES, ENSURE THAT THE EXISTING SURFACES HAVE BEEN COMPLETELY CLEANED OF EXISTING MOLD, MILDEW, ADHESIVES, COATINGS, CONSTRUCTION MARKS AND SURFACE DIRT AND SURFACES HAVE BEEN MECHANICALLY CLEANED DOWN TO BARE SUBSTRATE PRIOR TO ENCLOSING OR APPLYING FRAMING AND FINISHES.
5. PATCH, REPAIR, INFILL AND SMOOTH OUT SURFACES WHERE ITEMS THAT HAVE BEEN REMOVED LEAVE HOLES.
6. WHERE DEMOLITION IS REQUIRED TO INSTALL NEW WORK, PATCH AND REPAIR ALL ASSEMBLIES AND SURFACES SO AS TO BE VISUALLY UNDETECTABLE IN PROFILE, LIFT, TEXTURE, COLOR AND TO MATCH ALL ADJACENT SURFACES. PROVIDE ALL STRUCTURAL AND COSMETIC MATERIALS TO COMPLETE WORK.
7. PROVIDE METAL ACCESS DOORS WHERE BUILDING ELEMENTS ARE LOCATED IN INACCESSIBLE CEILING & WALL SPACES. BUILDING ELEMENTS SPECIFICALLY REQUIRING ACCESS INCLUDE, BUT ARE NOT LIMITED TO FIRE/SMOKE DAMPERS, VOLUME DAMPERS, FILTERS, VALVES, ELECTRICAL JUNCTION BOXES, MOTORS, FIRE SPRINKLER HEADS, CONTROLS. PROVIDE ADDITIONAL ACCESS DOORS WHERE SHOWN OR SCHEDULED. PROVIDE FIRE RATED ACCESS DOORS IN FIRE RATED ASSEMBLIES EQUAL TO THE FIRE RATING OF THE ASSEMBLY.
8. FOR CODE COMPLIANCE INFORMATION REFER TO DRAWING; - A0-21
9. FOR ACCESSIBILITY REQUIREMENTS SEE DRAWINGS. - A0-11
10. FOR GREEN CODE MANDATORY MEASURES REFER TO DRAWING; - A0-31
11. USE OF ABBREVIATIONS ARE NOT LIMITED TO THE ABBREVIATIONS LISTED ON THIS SHEET. FOR ADDITIONAL ABBREVIATIONS REFER TO SHEET; - A0-01

SYMBOLS

	ACCESS FLOORING - ASM'S CASINO DIVISION LINE OF PRODUCTS	
	STUD WALL - REFER STRUCTURAL DWG'S	
XX	DOOR TAG	- A6-11
XX	STOREFRONT TAG	- A6-11
XX	WALL TAG	- AD-01

℄	CENTERLINE	FOC	FACE OF CONCRETE
EOS	EDGE OF SLAB	FOM	FACE OF MASONRY
EQ	EQUAL	FOW	FACE OF WALL
FE	FIRE EXTINGUISHER	RO	ROUGH OPENING
FOS	FACE OF STUD	WP	WORK POINT
FOF	FACE OF FINISH		

ktgy

17911 Von Karman Ave.
Suite 200
Irvine, CA 92614
ktgy.com
949.851.2133

ktgy Project Number	20250428
Contact	DORINA WATSON
Email	dwatson@ktgy.com
Senior Director	DAVID SCHMITZ
Designer	RUSSEL ROSALES

Developer
SEDC
23906 SOBOBA ROAD
SAN JACINTO, CA 92581

PHONE: (951) 663-2058

SOBOBA SOVOVATUM VILLAGE PHASE-2

SAN JACINTO, CA

No.	DATE	DESCRIPTION

Client is responsible for notifying architect in writing for any discovered errors or omissions in the plans and specifications during construction of the project. Failure for Client to notify Architect of any known errors or omissions in the plans or specifications, and proceeding with constructing the portion of work shown in the plans or specifications containing known errors or omissions shall be a waiver by Client for any liability of Architect for such known errors or omissions. Client releases Architect for any liability for such portions of work, and Architect shall not be liable for any delay damages, change orders, repair costs, removal or demolition costs, or replacement of any such portions of work.

2026-05-26, ISSUED FOR BID

FLOOR PLANS

A2-11

Printed: 1/7/2026 4:29:06 PM

COPYRIGHT 2024 KTGY GROUP INC. These plans and specifications are protected by United States copyright law and may not be used, reproduced, distributed, transmitted, displayed, or modified in any way without the prior written consent of KTGY Group, Inc. or the authorized copyright holder or licensee.

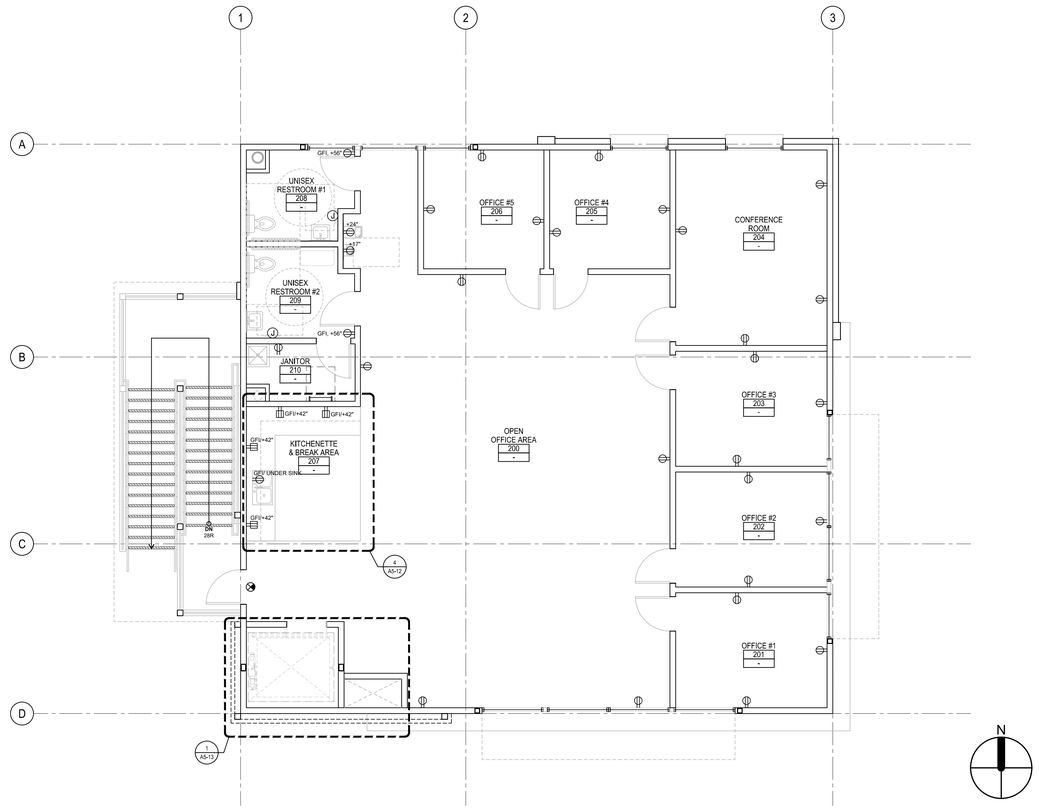

POWER AND DATA FLOOR PLAN - SECOND FLOOR | SCALE: 3/16"=1'-0" | 2

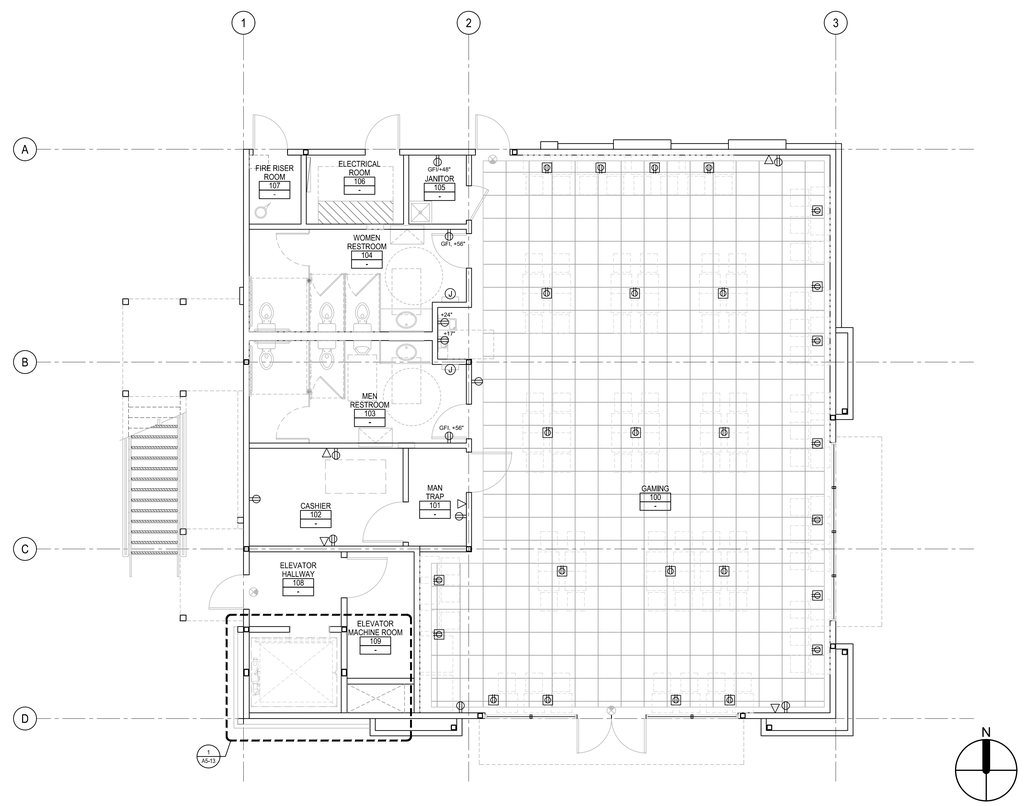

POWER AND DATA FLOOR PLAN - FIRST FLOOR | SCALE: 3/16"=1'-0" | 1

POWER PLAN KEYNOTES

1. OUTLET TO BE ON SEPARATE CIRCUIT AND ON BACK UP GENERATOR
2. ELECTRICAL TELCO/ DATA INCLUDING BUT NOT LIMITED TO OUTLETS, FEEDS, RUNS, ETC SHALL BE COORDINATED WITH OWNER AND THEIR GAMING/ IT VENDOR
3. OUTLET LOCATIONS ARE SHOWN FOR REFERENCE ONLY. REFER TO ELECTRICAL DRAWINGS
4. FOURPLEX RECEPTACLE, MOUNTED FLUSH IN FLOOR BOX WITH FITTINGS. POWER, DATA AND LOW VOLTAGE TO BE COORDINATED WITH OWNER AND THEIR GAMING CONSULTANT

LEGEND

- DUPLEX RECEPTABLE, +18" OR AS NOTED - REFER ELECTRICAL DRAWINGS
- QUADRUPLEX RECEPTACLE, +18" OR AS NOTED - REFER ELECTRICAL DRAWINGS
- GFI GFI — GROUND FAULT INTERRUPTING RECEPTACLE, +18" OR AS NOTED - REFER ELECTRICAL DRAWINGS
- FLOOR BOX RECEPTACLE WITH BRASS PROTECTION CAP - REFER ELECTRICAL DRAWINGS
- J — JUNCTION BOX - REFER ELECTRICAL DRAWINGS
- DATA OUTLET - REFER LOW VOLTAGE AND ELECTRICAL DRAWINGS

SYMBOLS

- ACCESS FLOORING - ASM'S CASINO DIVISION LINE OF PRODUCTS
- STUD WALL - REFER STRUCTURAL DWG'S

℄	CENTERLINE	FOC	FACE OF CONCRETE
EOS	EDGE OF SLAB	FOM	FACE OF MASONRY
EQ	EQUAL	FOW	FACE OF WALL
FE	FIRE EXTINGUISHER	RO	ROUGH OPENING
FOS	FACE OF STUD	WP	WORK POINT
FOF	FACE OF FINISH		

ktgy

17911 Von Karman Ave.
Suite 200
Irvine, CA 92614
ktgy.com
949.851.2133

ktgy Project Number 20250428
Contact DORINA WATSON
Email dwatson@ktgy.com
Senior Director DAVID SCHMITZ
Designer RUSSEL ROSALES

Developer
SEDC
23906 SOBOBA ROAD
SAN JACINTO, CA 92581

PHONE: (951) 663-2058

SOBOBA SOVOVATUM VILLAGE PHASE-2

SAN JACINTO, CA

No.	DATE	DESCRIPTION

Client is responsible for notifying architect in writing for any discovered errors or omissions in the plans and specifications during construction of the project. Failure for Client to notify Architect of any known errors or omissions in the plans or specifications, and proceeding with constructing the portion of work shown in the plans or specifications containing known errors or omissions shall be a waiver by Client for any liability of Architect for such known errors or omissions. Client releases Architect for any liability for such portions of work, and Architect shall not be liable for any delay damages, change orders, repair costs, removal or demolition costs, or replacement of any such portions of work.

2026-05-26, ISSUED FOR BID

POWER AND DATA FLOOR PLANS

A2-12

Plotted: 1/7/2026 4:29:08 PM

COPYRIGHT 2024 KTGY GROUP INC. These plans and specifications are protected by United States copyright law and may not be used, reproduced, distributed, transmitted, displayed, or modified in any way without the prior written consent of KTGY Group, Inc. or the authorized copyright holder or licensee.

ROOM FINISH SCHEDULE

ROOM NAME #	FLOOR	BASE	WALLS NORTH	WALLS EAST	WALLS SOUTH	WALLS WEST	CEILING	REMARKS
FIRST FLOOR								
GAMING 100	CPT-2	RB2	P003	P003	P003	P003	ACT-1/ P002	LEVEL 4 GYPSUM BOARD
MAN TRAP 101	ECON2	RB1	P001	P001	P001	P001	ACT2/ P001	LEVEL 4 GYPSUM BOARD
CASHIER 102	ECON2	RB1	P001	P001	P001	P001	ACT2/ P001	LEVEL 4 GYPSUM BOARD
MEN RESTROOM 103	PFT1	PTB1	PWT2/ PWT3/ P001	PWT2/ PWT3/ P001	PWT2/ PWT3/ P001	PWT2/ PWT3/ P001	P001S	PWT3 WALL ACCENT. LEVEL 4 GYPSUM BOARD
WOMEN RESTROOM 104	PFT1	PTB1	PWT2/ PWT3/ P001	PWT2/ PWT3/ P001	PWT2/ PWT3/ P001	PWT2/ PWT3/ P001	P001S	PWT3 WALL ACCENT. LEVEL 4 GYPSUM BOARD
JANITOR 105	ECON2	RB1	P001S	P001S	P001S	P001S	P001S	LEVEL 4 GYPSUM BOARD
ELECTRICAL ROOM 106	ECON1	-	P001	P001	P001	P001	OPEN	LEVEL 3 GYPSUM BOARD
FIRE RISER ROOM 107	ECON1	-	P001	P001	P001	P001	OPEN	LEVEL 3 GYPSUM BOARD
ELEVATOR LOBBY 108	CPT-1	RB1	P001	P001	P001	P001	ACT2/ P001	LEVEL 4 GYPSUM BOARD
ELEVATOR MACHINE ROOM 109	ECON1	-	P001	P001	P001	P001	P001	LEVEL 3 GYPSUM BOARD
SECOND FLOOR								
OPEN OFFICE AREA 200	CPT-1	RB1	P001	P001	P001	P001	ACT2/ P001	LEVEL 5 GYPSUM BOARD
OFFICE #1 201	CPT-1	RB1	P001	P001	P001	P001	ACT2/ P001	LEVEL 5 GYPSUM BOARD
OFFICE #2 202	CPT-1	RB1	P001	P001	P001	P001	ACT2/ P001	LEVEL 5 GYPSUM BOARD
OFFICE #3 203	CPT-1	RB1	P001	P001	P001	P001	ACT2/ P001	LEVEL 5 GYPSUM BOARD
CONFERENCE ROOM 204	CPT-1	RB1	P001	P001	P001	P001	ACT2/ P001	LEVEL 5 GYPSUM BOARD
OFFICE #4 205	CPT-1	RB1	P001	P001	P001	P001	ACT2/ P001	LEVEL 5 GYPSUM BOARD
OFFICE #5 206	CPT-1	RB1	P001	P001	P001	P001	ACT2/ P001	LEVEL 5 GYPSUM BOARD
KITCHENETTE & BREAK AREA 207	LVT2	RB1	PWT1/ P001S	-	-	PWT1/ P001S	ACT3	LEVEL 5 GYPSUM BOARD
UNISEX RESTROOM #1 208	PFT1	PTB1	PWT2/ PWT3/ P001	PWT2/ PWT3/ P001	PWT2/ PWT3/ P001	PWT2/ PWT3/ P001	P001S	PWT3 WALL ACCENT. LEVEL 4 GYPSUM BOARD
UNISEX RESTROOM #2 209	PFT1	PTB1	PWT2/ PWT3/ P001	PWT2/ PWT3/ P001	PWT2/ PWT3/ P001	PWT2/ PWT3/ P001	P001S	PWT3 WALL ACCENT. LEVEL 4 GYPSUM BOARD
JANITOR 210	LVT1	RB1	P001S	P001S	P001S	P001S	P001S	LEVEL 4 GYPSUM BOARD

SYMBOLS

- STUD WALL - REFER STRUCTURAL DWG'S
- ACCESS FLOORING - ASM'S CASINO DIVISION LINE OF PRODUCTS
- PORCELAIN TILE
- VINYL TILE
- POLISHED CONCRETE
- BARE CONCRETE
- CARPET
- VINYL TILE (KITCHENETTE)

℄	CENTERLINE	FOC	FACE OF CONCRETE
EOS	EDGE OF SLAB	FOM	FACE OF MASONRY
EQ.	EQUAL	FOW	FACE OF WALL
FE	FIRE EXTINGUISHER	RO	ROUGH OPENING
FOS	FACE OF STUD	WP	WORK POINT
FOF	FACE OF FINISH		

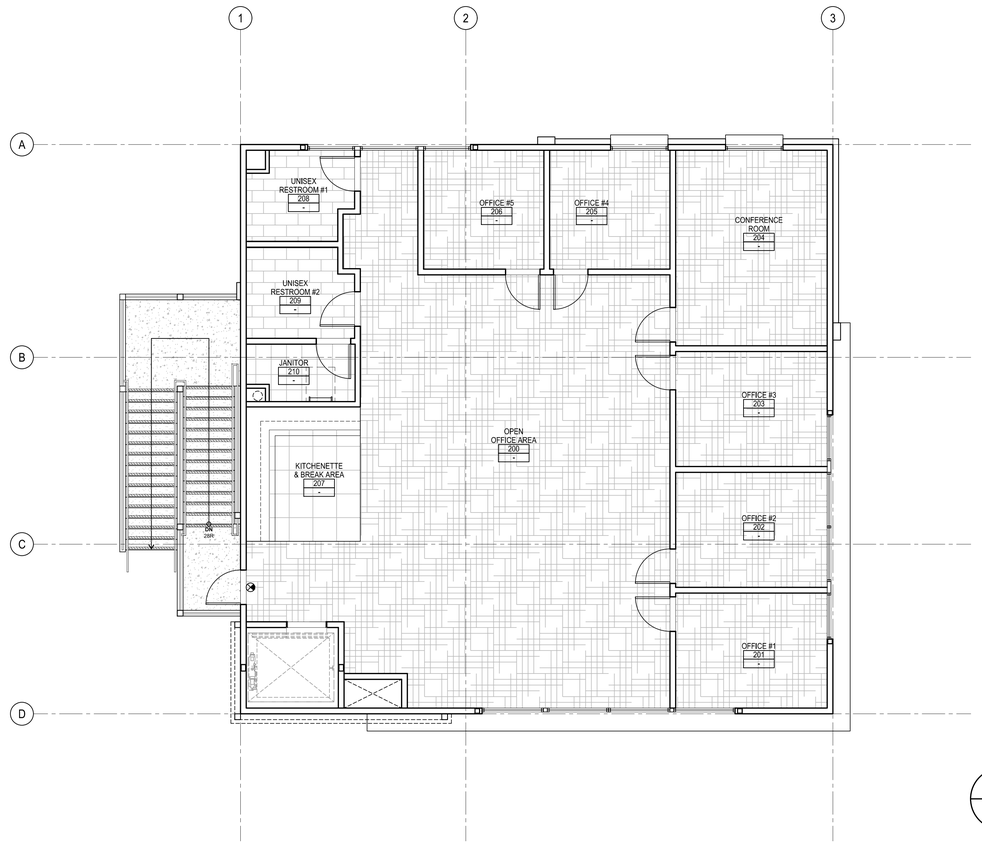

FLOOR AND WALL FINISH FLOOR PLAN - SECOND FLOOR | SCALE: 3/16"=1'-0" | 2

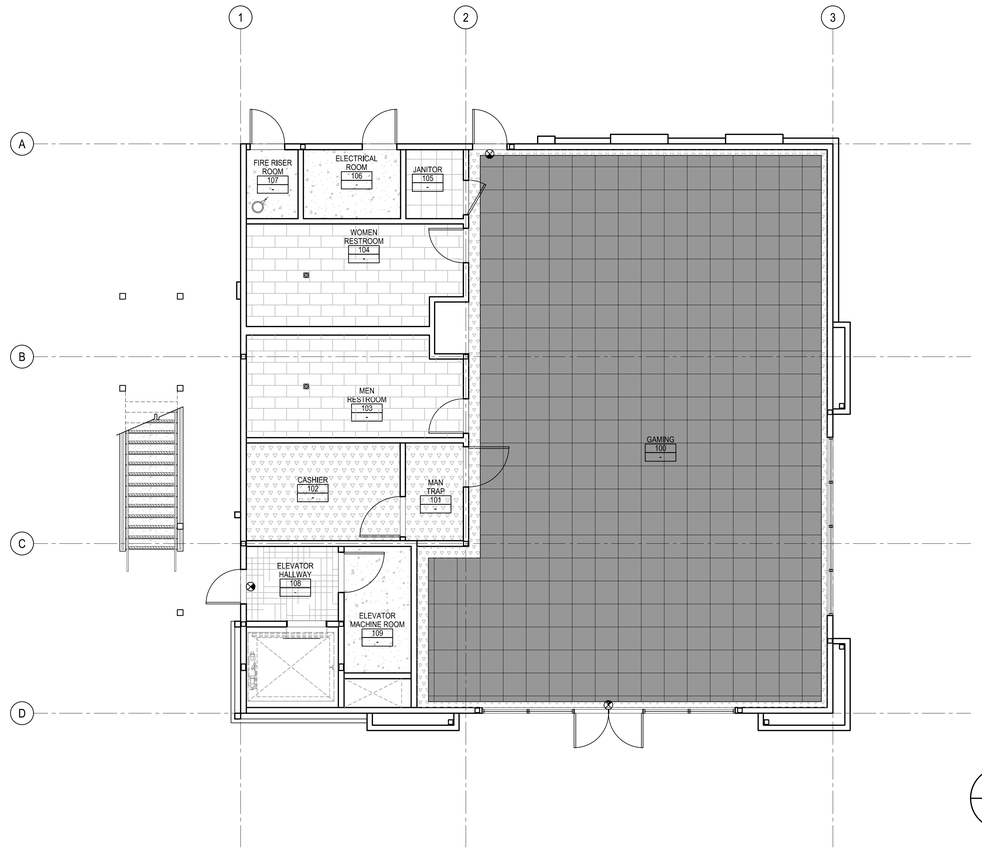

FLOOR AND WALL FINISH FLOOR PLAN - FIRST FLOOR | SCALE: 3/16"=1'-0" | 1

MATERIALS AND FINISH LEGEND

KEY NAME	MATERIAL TYPE	MANUFACTURER	STYLE	COLOR/NO	FINISH	INSTALLATION	SIZE	ROOM/ AREA	DESCRIPTION / NOTES
MILLWORK FINISH									
PL1	PLASTIC LAMINATE	NEVAMAR	PANOLAM	APPALACHIAN-WALNUT	HPL			KITCHENETTE	
WALL / FLOORING BASE									
PTB1	6" TILE BASE	DALTILE	CLASSIC COLORWHEEL COL	ARTIC WHITE 0790			6"X6"		#60 CHARCOAL GROUT FROM CUSTOM BUILDING PRODUCTS PROVIDE CONTINOUS SELF COVING 6" BASE WITH RADIUS COVE
RB1	RUBBER BASE	THERMOSET - TYPE TS	#20 CHARCOAL				4" HIGH	OFFICE	PER MANUFACTURERS INSTALLATION RECOMMENDATIONS AND INSTRUCTIONS
RB2	RUBBER BASE	THERMOSET - TYPE TS	#284 GANACHE				4" HIGH	GAMING	PER MANUFACTURERS INSTALLATION RECOMMENDATIONS AND INSTRUCTIONS
SOLID SURFACE									
SS1	QUARTZ	DALTILE	ONCE QUARTZ	CHATEAU				KITCHENETTE, RESTROOM SINK	
TILE									
PWT1	CERAMIC TILE	VILLA	ZELIEGE CERAMIC TILE	AGAVE				KITCHENETTE, BACKSPLASH	#544 ROLLING FOG, GROUT FROM CUSTOM BUILDING PRODUCTS, SEMI-POLISHED AND 6" COVE BASE
PWT2	CERAMIC TILE	DALTILE	COLOR WHEEL CLASSIC	ARCTIC WHITE	MATTE FINISH			RESTROOM WALLS	#60 CHARCOAL GROUT STAGGERED BRICK JOINT PATTERN. 4" BULLNOSE AT RESTROOMS
PWT3	CERAMIC TILE	DALTILE	COLOR WHEEL CLASSIC	ARTISAN BROWN	MATTE FINISH			RESTROOM WALL ACCENT	#333 ALABASTER GROUT FROM CUSTOM BUILDING PRODUCTS
FIBERGLASS									
FRP-1	FIBERGLASS	MARLITE		P-100 WHITE				JANITOR CLOSETS (2)	
FLOOR FINISH									
CPT-1	CARPET	SHAW CONTRACT	FLOW OF TIME	CRAFT 01516		ASHLAR	9" X 36"	OFFICE, ELEVATOR LOBBY	
CPT-2	CARPET	ASM's CASINO DIVISION						GAMING	
ECON1	EXPOSED CONCRETE							UTILITY	
ECON2	POLISHED CONCRETE	LATICRETE	PERMAGUARD SP5	BEIGE				STAIRS, CASHIER, MAN TRAP	PROVIDE MOCK-UP FOR OWNER/ARCHITECT APPROVAL
LVT1	VINYL TILE SHEET	ARMSTRONG	STRATAMAX PRO ASP 17	PEARL	LOW GLOSS		12' WIDE	SERVICE AREAS	
LVT2	LUXURY VINYL TILE	INTERFACE	NORTHER GRAIN 4.5 MM	NORDIC WASH			25 CM X 1 CM	KITCHENETTE	
PFT1	FLOOR TILE	TILEBAR	KARO OLIVE GRAY	GRAY	MATTE		12" X 24"	RESTROOMS	GROUT FROM CUSTOM BUILDING PRODUCTS. PROVIDE 6" COVE BASE AND BULLNOSE TRIM.
TR1	METAL EDGE	GENOTECK	EDGE DIVIDER 303	SATIN #66 BRONZE 312			3/8"	WHERE OCCURS	METAL EDGE BETWEEN CARPET AND TILE
PAINT									
P001	PAINT	SHERWIN WILLIAMS		SW7551 GREEK VILLA	EGGSHELL			OFFICE	
P001S	PAINT	SHERWIN WILLIAMS		SW7551 GREEK VILLA	SEMI GLOSS			KITCHENETTE, RESTROOMS	
P002	PAINT	SHERWIN WILLIAMS		SW7048 URBANE BRONZE	EGGSHELL			CEILING TILE IN GAMING	
P003	PAINT	SHERWIN WILLIAMS		SW7640 FAWN BRINDLE				GAMING	
ACOUSTICAL CEILING TILE									
ACT1	ACOUSTICAL CEILING TILE	ARMSTRONG	OPTIMA CONCEALED	SW7048 URBANE BRONZE		Prelude® XL® HD 15/16" suspension system	24" X 24"	GAMING	
ACT2	ACOUSTICAL CEILING TILE	ARMSTRONG	OPTIMA CONCEALED	SW7551 GREEK VILLA		Prelude® XL® HD 15/16" suspension system	24" X 24"	OFFICE	
ACT3	ACOUSTICAL CEILING TILE	ARMSTRONG	OPTIMA CONCEALED	SW7551 GREEK VILLA	CLEANABLE /WET	Prelude® XL® HD 15/16" suspension system	24" X 24"	KITCHENETTE	

Revised: 1/7/2026 4:29:06 PM

COPYRIGHT 2024 KTGY GROUP INC. These plans and specifications are protected by United States copyright law and may not be used, reproduced, distributed, transmitted, displayed, or modified in any way without the prior written consent of KTGY Group, Inc. or the authorized copyright holder or licensee.

ktgy

17911 Von Karman Ave.
Suite 200
Irvine, CA 92614
ktgy.com
949.851.2133

ktgy Project Number 20250428
Contact DORINA WATSON
Email dwatson@ktgy.com
Senior Director DAVID SCHMITZ
Designer RUSSEL ROSALES

Developer
SEDC
23906 SOBOBA ROAD
SAN JACINTO, CA 92581

PHONE: (951) 663-2058

SOBOBA SOVOVATUM VILLAGE PHASE-2

SAN JACINTO, CA

No.	DATE	DESCRIPTION

Client is responsible for notifying architect in writing for any discovered errors or omissions in the plans and specifications during construction of the project. Failure for Client to notify Architect of any known errors or omissions in the plans or specifications, and proceeding with constructing the portion of work shown in the plans or specifications containing known errors or omissions shall be a waiver by Client for any liability of Architect for such known errors or omissions. Client releases Architect for any liability for such portions of work, and Architect shall not be liable for any delay damages, change orders, repair costs, removal or demolition costs, or replacement of any such portions of work.

2026-05-26, ISSUED FOR BID

FINISH FLOOR PLANS

A2-13

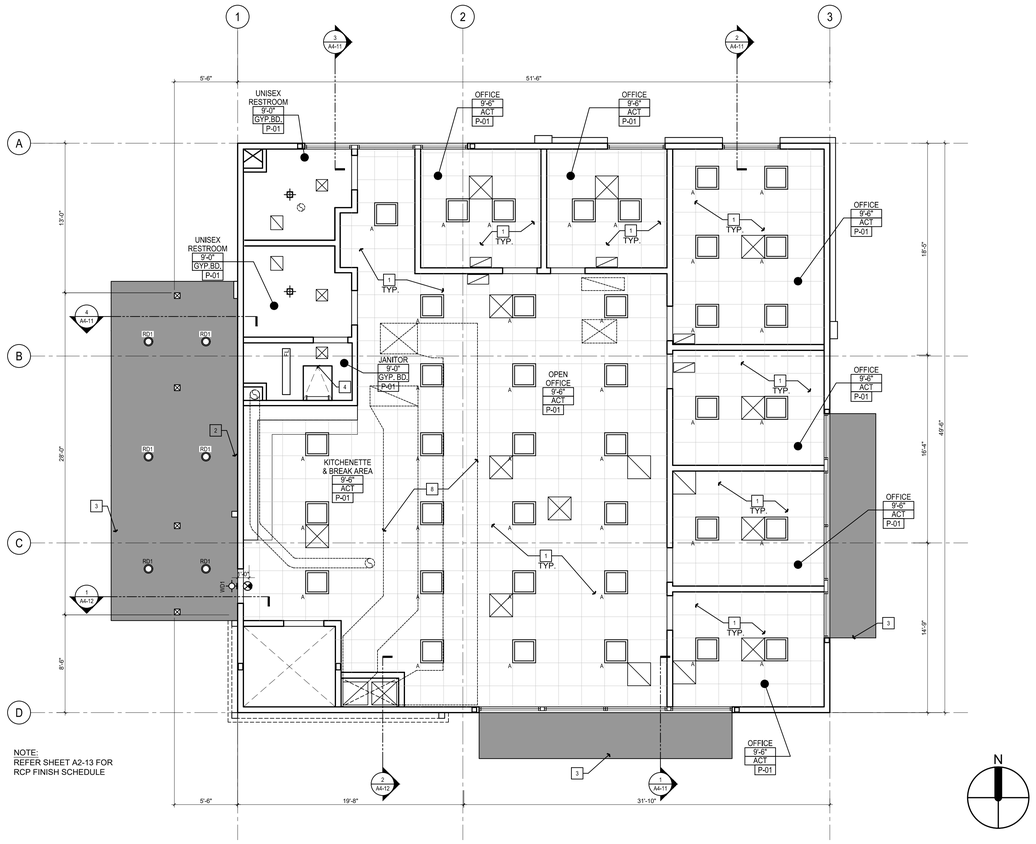

NOTE:
REFER SHEET A2-13 FOR RCP FINISH SCHEDULE

REFLECTED CEILING PLAN - SECOND FLOOR

SCALE: 3/16"=1'-0" | 2

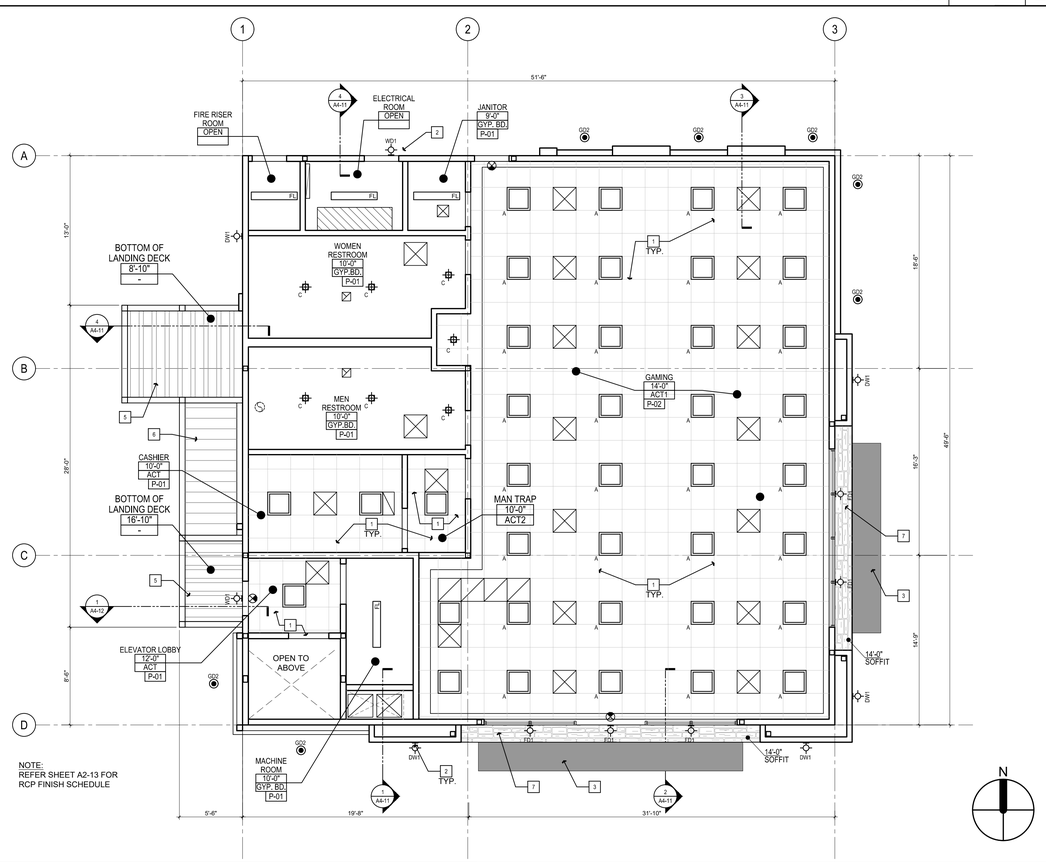

NOTE:
REFER SHEET A2-13 FOR RCP FINISH SCHEDULE

REFLECTED CEILING PLAN - FIRST FLOOR

SCALE: 3/16"=1'-0" | 1

REFLECTED CEILING KEYNOTES

1. 24"x24" SUSPENDED ACOUSTICAL CEILING & GRID - REFER TO FINISH SCHEDULE
2. EXTERIOR WALL MOUNTED FIXTURE - REFER TO ELECTRICAL AND LIGHTING DRAWINGS.
3. METAL FRAMING CANOPY, TYP. - REFER STRUCTURAL DWG'S
4. CEILING ACCESS PANEL - PAINT
5. METAL DECK - REFER STRUCTURAL DWG'S
6. METAL STAIRS - REFER STRUCTURAL DWG'S
7. ELDORADO STONE: EUROPEAN LEDGE, "ZINC"
8. 1ST FLOOR DUCT WORK ROUTING INTO DUCT CHASE - REFER MECHANICAL DWG'S

GENERAL NOTES

1. MECHANICAL GRILLES, REGISTERS, EXTERIOR LOUVERS AND LIGHT FIXTURES AND SPRINKLER HEADS ARE SHOWN FOR LOCATION PURPOSES ONLY. VERIFY QUANTITY, TYPE AND SIZE WITH MECHANICAL, ELECTRICAL, FIRE SPRINKER & FIRE ALARM DRAWINGS.
2. COLOR MATCH ALL T-BAR GRIDS, SPRINKLER COLLARS & CAPS, CEILING DIFFUSERS AND GRILLES, ETC. W/ THE SPECIFIED COLOR OF THE CEILING. PAINT INSIDE OF REGISTER AND DUCT THROAT FLAT BLACK.
3. PAINT ALL EXPOSED STRUCTURE, DECKING FASTENERS, HANGERS, CONNECTIONS, SUPPORTS, BRACES, PIPING, VALVE BOXES, CONDUIT, EXPOSED DUCT WORK, ELECTRICAL BOXES, EXPOSED INSULATION AND SCRIM COVERING.
4. UNLESS NOTED OTHERWISE. CENTER PATTERN OF FIRE SPRINKLER HEADS IN THE CEILING OF EACH ROOM, CENTER HEADS IN ACOUSTIC TILES AND LOCATE HEADS IN LINE WITH AND CENTERED BETWEEN LIGHT FIXTURES IN GYP. BD. CEILING. & EXTERIOR SOFFITS.
5. CEILING HEIGHTS INDICATED ARE MEASURED FROM FINISH FLOOR TO BOTTOM OF CEILING FINISH.
6. PROVIDE METAL LATH AT EXTERIOR PLASTER SOFFITS.
7. APPLY 5/8" FIRE RATED GYP. BOARD ON COMBUSTIBLE FRAMING EXTENDING INTO CONCEALED SOFFITS PRIOR TO SOFFIT INSTALLATION.
8. PROVIDE NON-COMBUSTIBLE HANGERS & FRAMING FOR DROPPED CEILINGS BELOW RATED FLOOR-CEILING & ROOF-CEILING ASSEMBLIES.
9. PROVIDE BACKING FOR ALL EQUIPMENT, CASEWORK, ACCESSORIES & WINDOW COVERINGS. VERIFY BACKING AND BLOCKING LOCATIONS PRIOR TO COVERING OF FRAMING.
10. PROVIDE METAL ACCESS DOORS WHERE BUILDING ELEMENTS ARE LOCATED IN INACCESSIBLE CEILING & WALL SPACES. BUILDING ELEMENTS SPECIFICALLY REQUIRING ACCESS INCLUDE, BUT ARE NOT LIMITED TO FIRE/SMOKE DAMPERS, VOLUME DAMPERS, FILTERS, VALVES, ELECTRICAL JUNCTION BOXES, MOTORS, FIRE SPRINKLER HEADS, CONTROLS. PROVIDE ADDITIONAL ACCESS DOORS WHERE SHOWN OR SCHEDULED. PROVIDE FIRE RATED ACCESS DOORS IN FIRE RATED ASSEMBLIES EQUAL TO THE FIRE RATING OF THE ASSEMBLY.

CEILING SCHEDULE

1	24" X 24" SUSPENDED ACOUSTICAL CEILING & GRID - REFER TO FINISH SCHEDULE
2	EXTERIOR WALL MOUNTED FIXTURE - REFER TO ELECTRICAL AND LIGHTING DWG'S
3	METAL DECK - REFER TO STRUCTURAL DWG'S
4	METAL FINISH CANOPY - PAINT
5	ELDORADO STONE

SYMBOLS

- 24" x 24" LED RECESSED LUMINAIRE – REF ELECTRICAL DRAWINGS
- SURFACE MOUNTED LED STRIP LIGHT – REF ELECTRICAL DRAWINGS
- EXIT SIGN – REF ELECTRICAL DRAWINGS
- RECESSED 6" RECESSED ROUND LED – REFER ELECTRICAL DRAWINGS
- DW1 WALL MOUNTED FIXTURE – REFER ELECTRICAL AND LIGHTING DRAWINGS
- DW2 WALL MOUNTED FIXTURE – REFER ELECTRICAL AND LIGHTING DRAWINGS
- RETURN AIR GRILLE – REFER MECHANICAL DRAWINGS
- SUPPLY AIR DIFFUSER – REFER MECHANICAL DRAWINGS
- EXHAUST AIR GRILLE – REFER MECHANICAL DRAWINGS
- 0'-0" SOFFIT HEIGHT ABOVE FINISH FLOOR
- ROOF HATCH
- NON-RATED FRAMED WALL
- 1 HOUR RATED PARTITION

ACT	ACOUSTICAL CEILING TILE	UNO	UNLESS OTHERWISE NOTED
CLG	CEILING	EXPO	EXPOSED
FF	FINISH FLOOR.	SUSP	SUSPENDED
FIN	FINISH	RCP	REFLECTED CEILING PLAN
GYP. BD.	GYPSUM BOARD		

ktgy

17911 Von Karman Ave.
Suite 200
Irvine, CA 92614
ktgy.com
949.851.2133

ktgy Project Number	20250428
Contact	DORINA WATSON
Email	dwatson@ktgy.com
Senior Director	DAVID SCHMITZ
Designer	RUSSEL ROSALES

Developer
SEDC
23906 SOBOBA ROAD
SAN JACINTO, CA 92581

PHONE: (951) 663-2058

SOBOBA SOVOVATUM VILLAGE PHASE-2

SAN JACINTO, CA

No.	DATE	DESCRIPTION

Client is responsible for notifying architect in writing for any discovered errors or omissions in the plans and specifications during construction of the project. Failure for Client to notify Architect of any known errors or omissions in the plans or specifications, and proceeding with constructing the portion of work shown in the plans or specifications containing known errors or omissions shall be a waiver by Client for any liability of Architect for such known errors or omissions. Client releases Architect for any liability for such portions of work, and Architect shall not be liable for any delay damages, change orders, repair costs, removal or demolition costs, or replacement of any such portions of work.

REFLECTED CEILING PLANS

2026-05-26, ISSUED FOR BID

A2-14

Printed - 1/7/2026 4:29:06 PM

COPYRIGHT 2024 KTGY GROUP INC. These plans and specifications are protected by United States copyright law and may not be used, reproduced, distributed, transmitted, displayed, or modified in any way without the prior written consent of KTGY Group, Inc. or the authorized copyright holder or licensee.

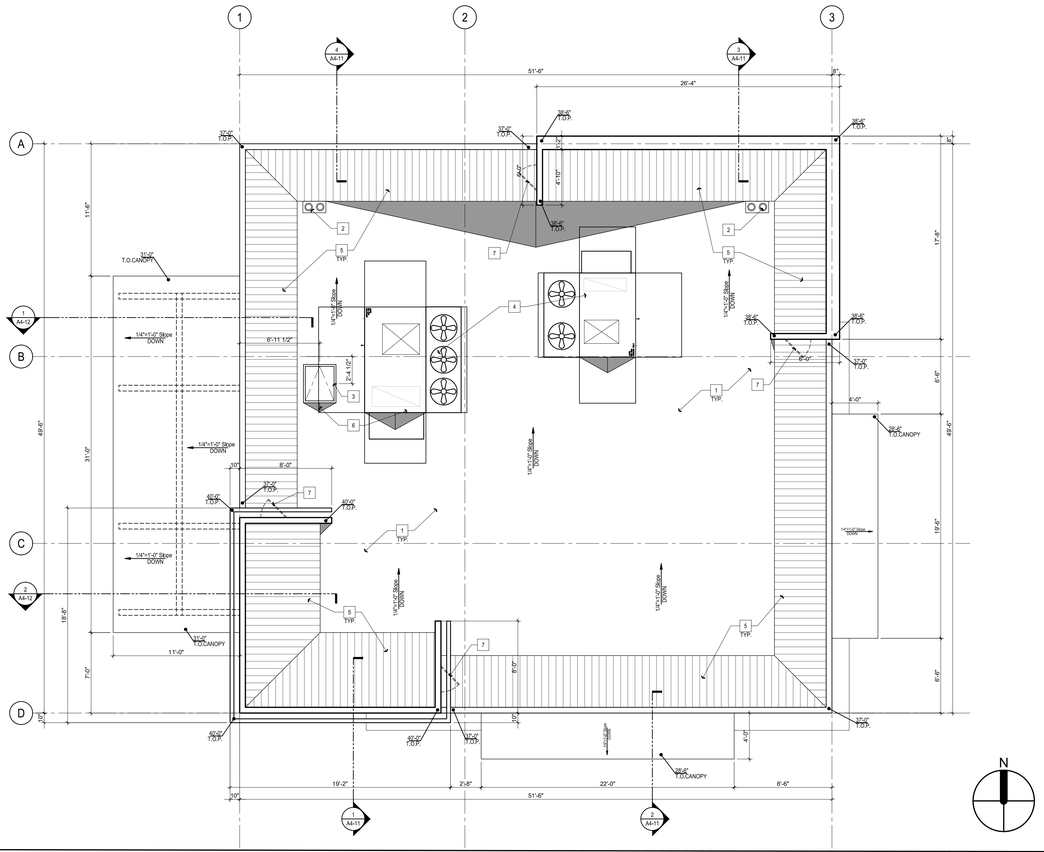

ROOF PLAN | SCALE: 3/16"=1'-0" | 1

ROOF PLAN KEYNOTES

1. TPO ROOFING SYSTEM CLASS A INSTALLED PER MANUFACTURE REQUIREMENT O/ WOOD FRAMING - REFER STRUCTURAL DWG'S
2. ROOF DRAIN AND OVERFLOW SYSTEM - REFER PLUMBING DWG'S
3. ROOF HATCH W/ LADDER UP SAFETY POST LOCATION - REFER DETAIL 21/AD-02
4. ROOF TOP UNIT W/ CURB - REFER MECHANICAL DWG'S
5. WOOD BRACE FRAMING TO SUPPORT PARAPET WALL - REFER STRUCTURAL DWG'S
6. ROOF CRICKET, TYP
7. ATTIC ACCESS METAL PANEL DOOR - PAINT TO MATCH ADJACENT

GENERAL NOTES

1. ALL ROOF HEIGHTS ARE REFERENCED FROM FINISH FLOOR ELEVATION 0'-0".
2. EXTEND DRAFT STOPS THROUGH VOID SPACES.
3. FOR BUILDING AND PARAPET HEIGHT VERTICAL ELEVATIONS, REFER TO EXTERIOR ELEVATIONS.
4. PROVIDE CLASS 'A' ROOFING SYSTEM.
5. PROVIDE ROUND PENETRATIONS THROUGH ROOF. THE USE OF CHANNELS, ANGLES, OR UNI-STRUTS THROUGH THE ROOF ALONE OR WITH PITCH POCKETS IS NOT ALLOWED.
6. DO NOT PENETRATE ROOFING WITHIN 18" OF VALLEYS, HIPS OR RIDGES.
7. VERIFY ALL REQUIRED ROOF TOP EQUIPMENT CURB AND SUPPORT DIMENSIONS PRIOR TO FRAMING OF ROOF SUPPORTS, OPENINGS AND CURB FABRICATION AND INSTALLATION.
8. PROVIDE CRICKETS AT ROOF MOUNTED EQUIPMENT AS REQUIRED FOR PROPER DRAINAGE.
9. DIRECTLY CONNECT ALL DOWNSPOUTS AND ROOF DRAINS TO STORM DRAIN FILTRATION SYSTEM.
10. ROOF DRAIN PIPES AND FITTINGS ARE TO BE CONCEALED WITHIN BUILDING CONSTRUCTION.
11. TERMINATE OVERFLOW DRAIN AT EXTERIOR WALL AT 18" ABOVE ADJACENT EXTERIOR FINISH GRADE.
12. PROVIDE ATTIC VENTILATION PER CALCULATIONS ON THIS DRAWING.
13. WHERE DEMOLITION IS REQUIRED TO INSTALL NEW WORK, PATCH AND REPAIR ALL ASSEMBLIES AND SURFACES TO BE VISUALLY UNDETECTABLE IN PROFILE, LIFT, TEXTURE, COLOR AND TO MATCH ALL ADJACENT SURFACES. PROVIDE ALL STRUCTURAL AND COSMETIC MATERIALS TO COMPLETE THIS WORK.

SYMBOLS & ABBREVIATIONS

- ROOF DRAIN AND OVERFLOW — 12 / AD-02
- CRICKET — 9 / AD-02
- PARAPET BRACE FRAMING - REFER STRUCT. DWG'S
- EXHAUST FAN
- ROOF HATCH — 17 / AD-02
- SLOPE — DIRECTION OF SLOPE
- 0'-0" FS — SPOT ELEVATION

BIT	BITUMINOUS	RFG	ROOFING
DS	DOWNSPOUT	RWL	RAIN WATER LEADER
EPS	EXPANDED POLY-STYRENE	SHTG	SHEATHING
FS	FINISH SURFACE	TOS	TOP OF STEEL
INSUL	INSULATION	TOD	TOP OF DECK
OF	OVERFLOW DRAIN		
MOD	MODIFIED		
RD	ROOF DRAIN		

ktgy

17911 Von Karman Ave.
Suite 200
Irvine, CA 92614
ktgy.com
949.851.2133

ktgy Project Number 20250428

Contact	DORINA WATSON
Email	dwatson@ktgy.com
Senior Director	DAVID SCHMITZ
Designer	RUSSEL ROSALES

Developer
SEDC
23906 SOBOBA ROAD
SAN JACINTO, CA 92581

PHONE: (951) 663-2058

SOBOBA SOVOVATUM VILLAGE PHASE-2

SAN JACINTO, CA

No.	DATE	DESCRIPTION

Client is responsible for notifying architect in writing for any discovered errors or omissions in the plans and specifications during construction of the project. Failure for Client to notify Architect of any known errors or omissions in the plans or specifications, and proceeding with constructing the portion of work shown in the plans or specifications containing known errors or omissions shall be a waiver by Client for any liability of Architect for such known errors or omissions. Client releases Architect for any liability for such portions of work, and Architect shall not be liable for any delay damages, change orders, repair costs, removal or demolition costs, or replacement of any such portions of work.

ROOF PLAN

2026-05-26, ISSUED FOR BID

A2-21

Printed: 1/7/2026 4:29:06 PM

COPYRIGHT 2024 KTGY GROUP INC. These plans and specifications are protected by United States copyright law and may not be used, reproduced, distributed, transmitted, displayed, or modified in any way without the prior written consent of KTGY Group, Inc. or the authorized copyright holder or licensee.

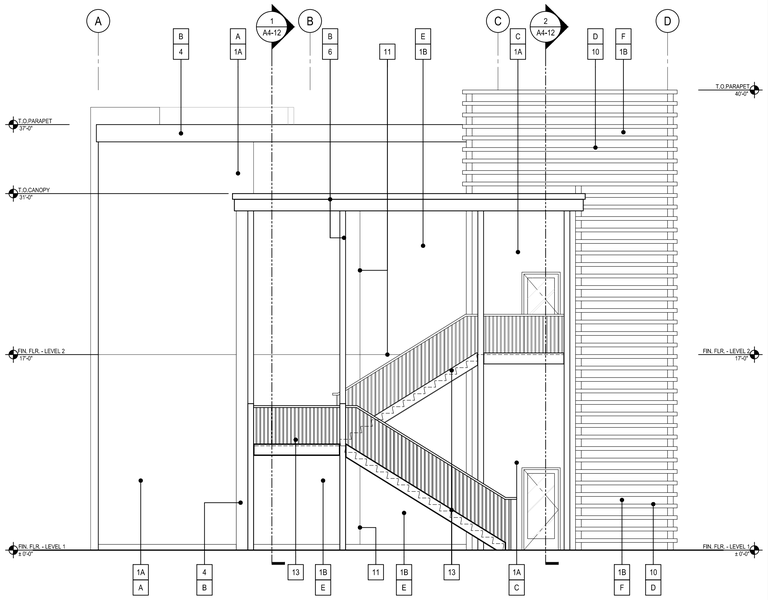

LEFT ELEVATION - WEST | SCALE: 3/16"=1'-0" | 4

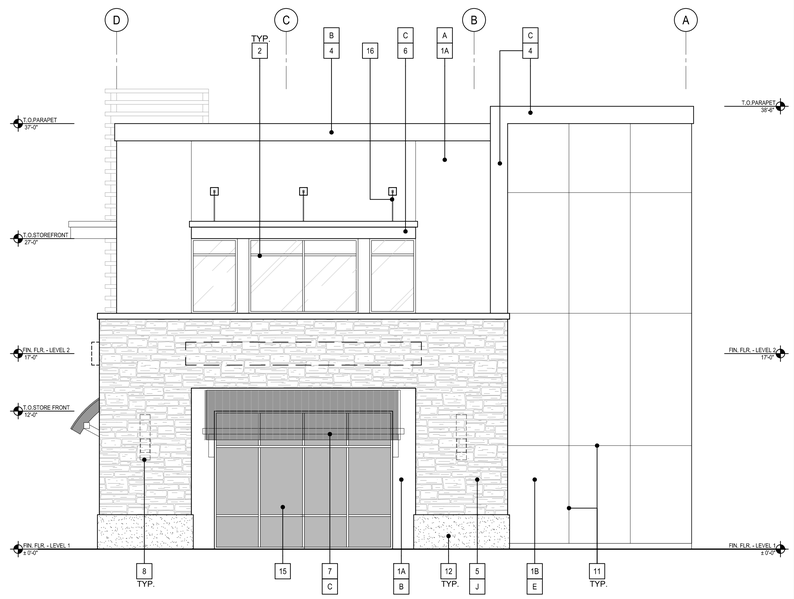

RIGHT ELEVATION - EAST | SCALE: 3/16"=1'-0" | 2

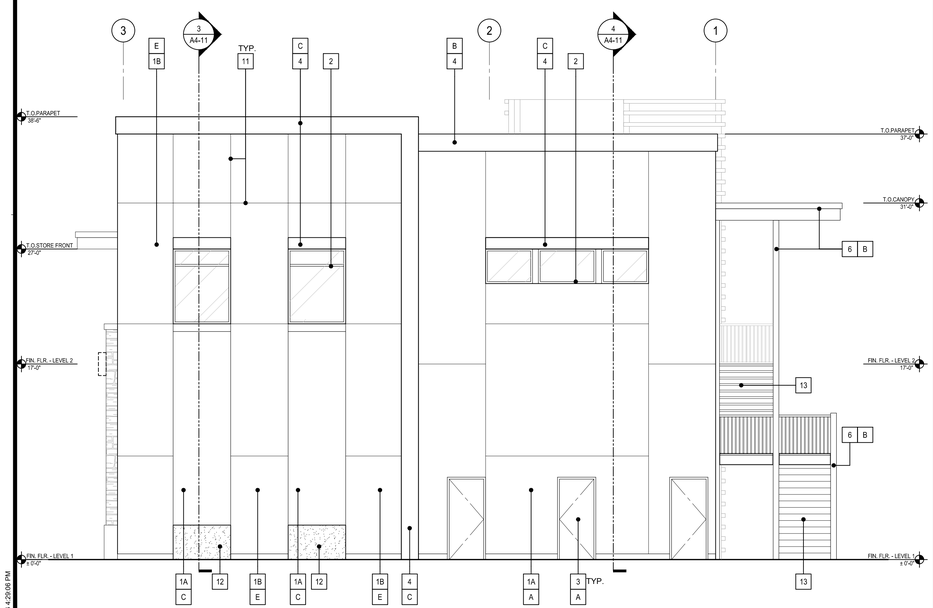

REAR ELEVATION - NORTH | SCALE: 3/16"=1'-0" | 3

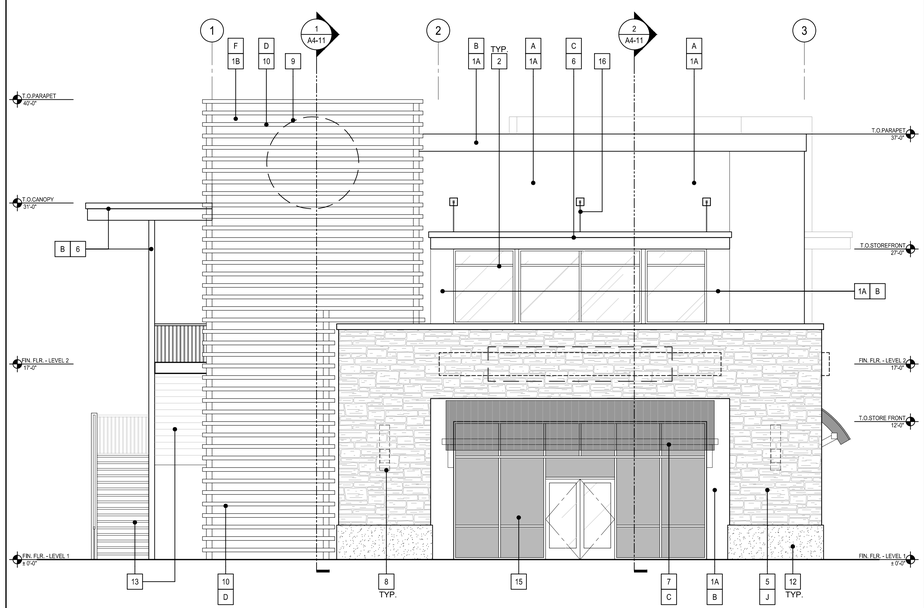

FRONT ELEVATION - SOUTH | SCALE: 3/16"=1'-0" | 1

GENERAL NOTES

1. SEE FLOOR PLANS FOR WINDOW AND DOOR IDENTIFICATION (- / A2-11)
2. FOR DOOR FINISHES - SEE DOOR SCHEDULE (- / A7-11)
3. DATUM LINE 0'-0" IS FOR REFERENCE ONLY. VERIFY ACTUAL SLAB/DECK HEIGHTS, SLOPES AND ELEVATIONS ON FLOOR PLANS AND SECTIONS
4. RETURN FINISHES TO INSIDE CORNERS TERMINATE PERPENDICULAR TO ADJACENT DISSIMILAR FINISHES, UNLESS NOTED OTHERWISE.
5. UNLESS INDICATED OTHERWISE PROVIDE METAL PLASTER CONTROL JOINTS IN AT 10'-0" O.C. MAX. EACH WAY.
6. PROVIDE DISABLED ACCESS ENTRANCE SIGNS AT PUBLIC ENTRANCES.
7. PAINT EXPOSED METAL FLASHING TO MATCH COLOR OF ADJACENT SURFACES.
8. PROVIDE 2 POUNDS PER CUBIC FOOT EPS WITHIN 8'-0" OF EXTERIOR GRADE LINE. USE 1 POUND PER CUBIC FOOT EPS AT ALL OTHER LOCATIONS.
9. PROVIDE FLASHING FOR ALL ITEMS PENETRATING EXTERIOR WALL CONSTRUCTION.
10. EXTEND SUBSTRATE SHTG TO NEAREST INSIDE OR OUTSIDE WALL CORNER TO OBTAIN CONTINUOUS FLUSH WALL. PROVIDE 1/2" GYPSUM SHEATHING ON EXTERIOR WALLS NOT INDICATED TO HAVE STRUCTURAL WOOD SHEATHING.
11. DETERMINE GAGE OF EXTERIOR METAL STUDS BASED ON INDICATED DEPTH, SPACING AND WIND LOADS. REFER TO STRUCTURAL DRAWINGS FOR WIND LOADS.
12. SEAL FIXED WINDOWS TO LIMIT AIR INFILTRATION.
13. PROVIDE TO THE OWNER A "CERTIFICATION OF COMPLIANCE" SIGNED BY THE GENERAL CONTRACTOR STATING THAT MATERIALS WORKMANSHIP COMPLY WITH THE PLANS AND SPECIFICATIONS AFFECTING T-24 ENERGY DESIGN REQUIREMENTS.
14. INSTALL ALL NEW GLAZING WITH A CERTIFYING LABEL ATTACHED, SHOWING U-VALUE.
15. PROVIDE DUAL PANE INSULATING GLASS AT ALL EXTERIOR GLAZING, EXCEPT AT DOORS.
16. PROVIDE SAFETY GLAZING REQUIRED BY CBC.
17. PROVIDE GLASS THICKNESS REQUIRED BY CBC.
18. FOR OPENING FLASHING REQUIREMENTS REFER TO DETAILS. (13 / AD-01)

ELEVATION MATERIALS

1	EXTERIOR WALL: 3-COAT EXTERIOR PLASTER SYSTEM, MINIMUM 7/8" THICK OVER (2) LAYERS GRADE 'D' MINIMUM BUILDING PAPER, SMOOTH PLASTER FINISH. INSTALL PER MANUFACTURER'S INSTRUCTIONS. A. **OMEGA** - "SMOOTH" B. **OMEGA** - "GLACIER"
2	ALUMINUM STOREFRONT: **ARCADIA**, AB6 "MEDIUM BRONZE"
3	DOOR: HOLLOW METAL DOOR. PAINT TO MATCH ADJACENT. REFER TO DOOR SCHEDULE.
4	ARCHITECTURAL TRIM/ CORNICE: FOAM CONCEPTS MANUFACTURED DECORATIVE ELEMENT, REFER TO ARCHITECTURAL DETAILS. PAINT PER PAINT COLORS.
5	STONE VENEER: CRAFT PEAK LEDGE
6	METAL CANOPY: METAL AWNING WITH PERFORATED METAL PANEL INFILL. PER PAINT COLORS. REFER TO DETAILS XX-XX AND STRUCTURAL DRAWINGS.
7	CORRUGATED METAL AWNING: METAL AWNING WITH PERFORATED METAL PANEL INFILL. PER PAINT COLORS. REFER TO DETAILS XX-XX AND STRUCTURAL DRAWINGS.
8	LIGHT FIXTURE: MANUFACTURER TBD.
9	SIGNAGE: FOR FUTURE SIGNAGE BY TENANT, PROVIDE BACKING. REFER TO WALL SECTIONS.
10	ALUMINUM BATTEN: PRIME TO PAINT
11	REVEAL: PAINT TO MATCH ADJACENT, REFER TO ARCHITECTURAL DETAILS.
12	PRECAST CONCRETE BASE:
13	STAIRCASE WITH GUARDRAIL & HANDRAIL SYSTEM
14	J-BOX: FUTURE SIGNAGE BY TENANT. CONTRACTOR TO VERIFY WITH SIGNAGE VENDOR REQUIRED LOCATION OF J-BOX PRIOR TO INSTALLATIONS. REFER TO ELECTRICAL DRAWINGS.
15	SPANDREL GLASS
16	5/8" DIA. TIE ROD W/ TURN BUCKLE - PAINT TO MATCH CANOPY COLOR

ELEVATION FINISHES

A	SHERWIN WILLIAMS: SW 7022 - ALPACA
B	SHERWIN WILLIAMS: SW 7041 - VAN DYKE BROWN
C	SHERWIN WILLIAMS: SW 7048 - URBANE BRONZE
D	SHERWIN WILLIAMS: SW 6394 - SEQUIN
E	SHERWIN WILLIAMS: SW 9570 - IRONCLAD
F	SHERWIN WILLIAMS: SW 6020 - MAROONED
G	SHERWIN WILLIAMS: SW 7668 - MARCH WIND
H	SHERWIN WILLIAMS: SW 7006 - EXTRA WHITE
J	CREATIVE MINES: CRAFT PEAK LEDGE, "BLACKTRUFFLE"
K	ELDORADO STONE: EUROPEAN LEDGE, "ZINC"

SYMBOLS & ABBREVIATIONS

X	MATERIAL & FINISH KEYNOTE
T	TEMPERED GLASS
	ELDORADO STONE
	OMEGA STUCCO
	CORRUGATED METAL AWNING
	SPANDREL GLASS
	PRECAST CONCRETE BASE

AB	ANCHOR BOLT	FIN	FINISH
ACT	ACOUSTICAL CEILING TILE	FTG	FOOTING
ALUM	ALUMINUM	HVAC	HEATING VENTILATION & AIR CONDITIONING
BLDG	BUILDING		
CLG	CEILING	INSUL	INSULATION
COL	COLUMN	TYP	TYPICAL
CONC	CONCRETE	UNF	UNFINISHED
CPT	CARPET	UNO	UNLESS NOTED OTHERWISE
CT	CERAMIC TILE	VCT	VINYL COMPOSITION TILE
DR	DOOR	VIF	VERIFY IN FIELD

ktgy

17911 Von Karman Ave.
Suite 200
Irvine, CA 92614
ktgy.com
949.851.2133

ktgy Project Number	20250428
Contact	DORINA WATSON
Email	dwatson@ktgy.com
Senior Director	DAVID SCHMITZ
Designer	RUSSEL ROSALES

Developer
SEDC
23906 SOBOBA ROAD
SAN JACINTO, CA 92581

PHONE: (951) 663-2058

SOBOBA SOVOVATUM VILLAGE PHASE-2

SAN JACINTO, CA

No.	DATE	DESCRIPTION

Client is responsible for notifying architect in writing for any discovered errors or omissions in the plans and specifications during construction of the project. Failure for Client to notify Architect of any known errors or omissions in the plans or specifications, and proceeding with constructing the portion of work shown in the plans or specifications containing known errors or omissions shall be a waiver by Client for any liability of Architect for such known errors or omissions. Client releases Architect for any liability for such portions of work, and Architect shall not be liable for any delay damages, change orders, repair costs, removal or demolition costs, or replacement of any such portions of work.

2026-05-26, ISSUED FOR BID

EXTERIOR ELEVATIONS

A3-11

Printed: 1/7/2026 4:29:06 PM

COPYRIGHT 2024 KTGY GROUP INC. These plans and specifications are protected by United States copyright law and may not be used, reproduced, distributed, transmitted, displayed, or modified in any way without the prior written consent of KTGY Group, Inc. or the authorized copyright holder or licensee.

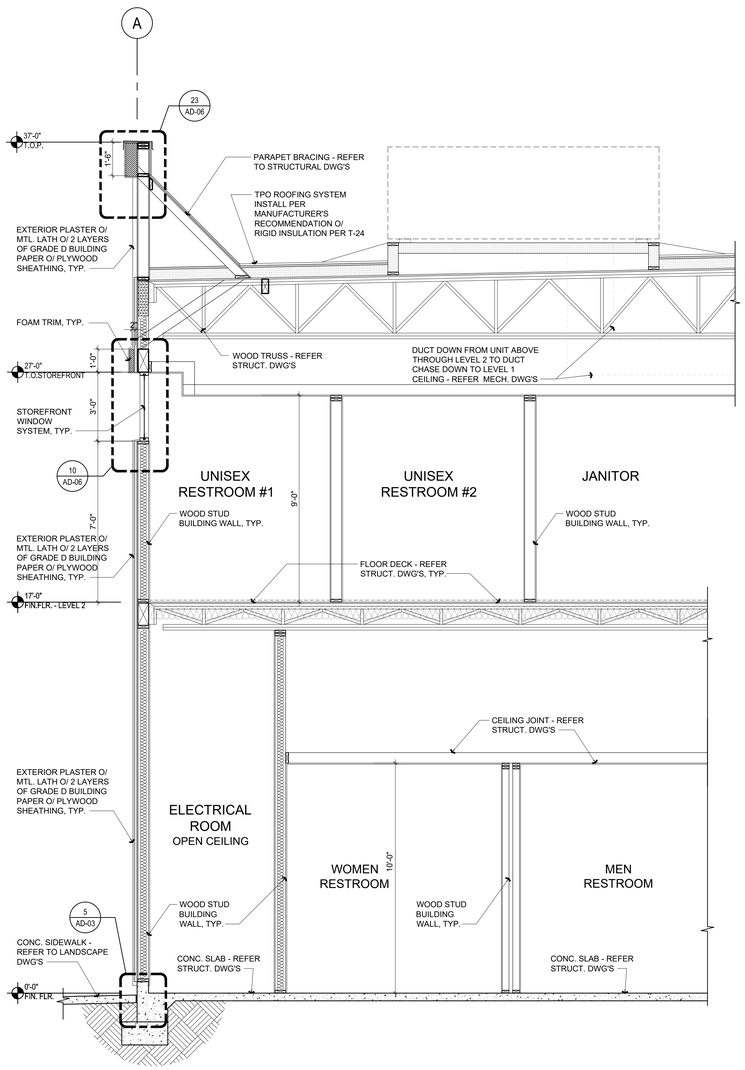

WALL SECTION | SCALE: 3/8"=1'-0" | 4

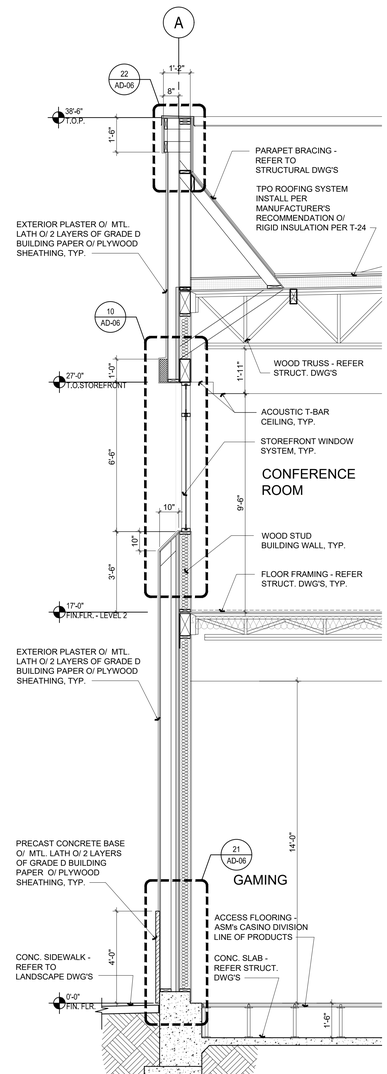

WALL SECTION | SCALE: 3/8"=1'-0" | 3

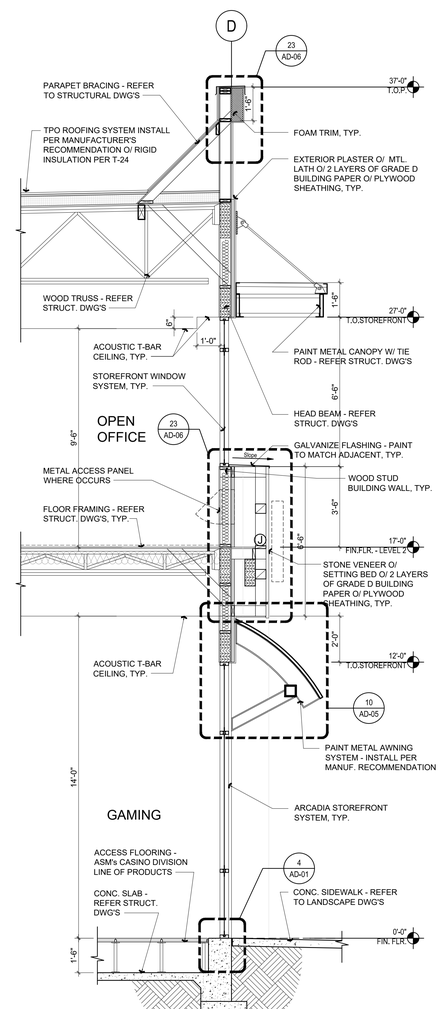

WALL SECTION | SCALE: 3/8"=1'-0" | 2

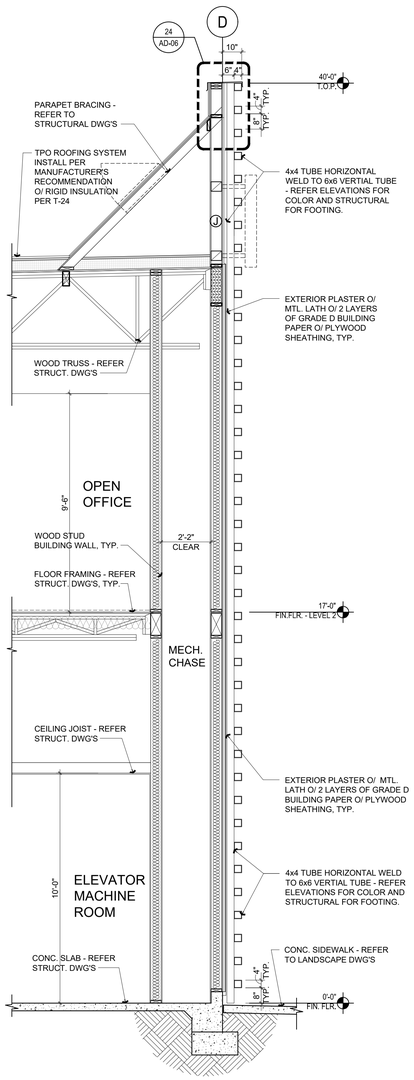

WALL SECTION | SCALE: 3/8"=1'-0" | 1

ktgy

17911 Von Karman Ave.
Suite 200
Irvine, CA 92614
ktgy.com
949.851.2133

ktgy Project Number	20250428
Contact	DORINA WATSON
Email	dwatson@ktgy.com
Senior Director	DAVID SCHMITZ
Designer	RUSSEL ROSALES

Developer
SEDC
23906 SOBOBA ROAD
SAN JACINTO, CA 92581

PHONE: (951) 663-2058

SOBOBA SOVOVATUM VILLAGE PHASE-2

SAN JACINTO, CA

No.	DATE	DESCRIPTION

Client is responsible for notifying architect in writing for any discovered errors or omissions in the plans and specifications during construction of the project. Failure for Client to notify Architect of any known errors or omissions in the plans or specifications, and proceeding with constructing the portion of work shown in the plans or specifications containing known errors or omissions shall be a waiver by Client for any liability of Architect for such known errors or omissions. Client releases Architect for any liability for such portions of work, and Architect shall not be liable for any delay damages, change orders, repair costs, removal or demolition costs, or replacement of any such portions of work.

2026-05-26, ISSUED FOR BID

WALL SECTIONS

A4-11

Printed: 1/7/2026 4:29:06 PM

COPYRIGHT 2024 KTGY GROUP INC. These plans and specifications are protected by United States copyright law and may not be used, reproduced, distributed, transmitted, displayed, or modified in any way without the prior written consent of KTGY Group, Inc. or the authorized copyright holder or licensee.

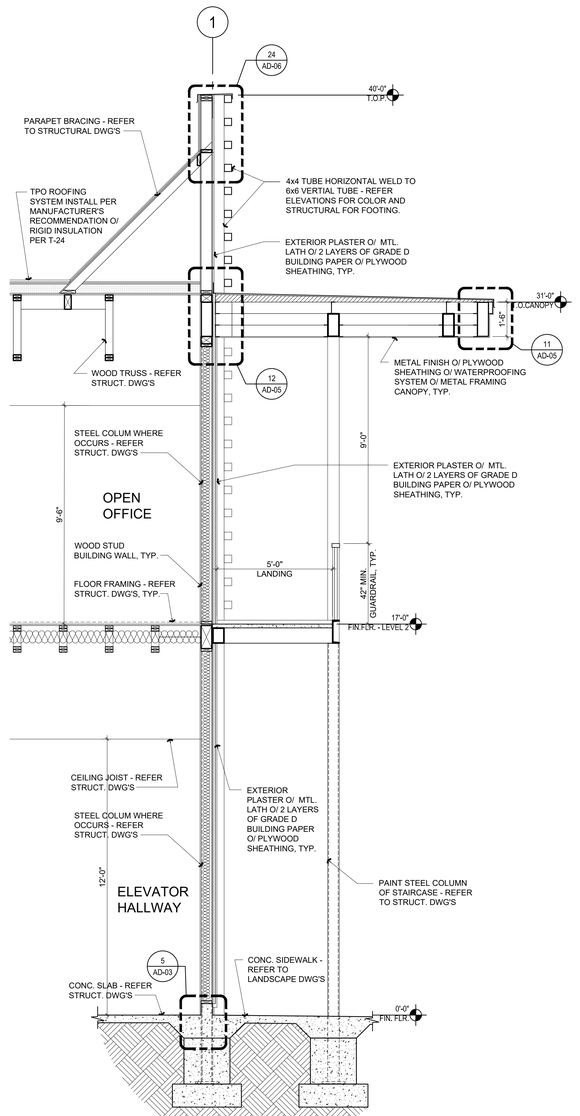

WALL SECTION | SCALE: 3/8"=1'-0" | 2

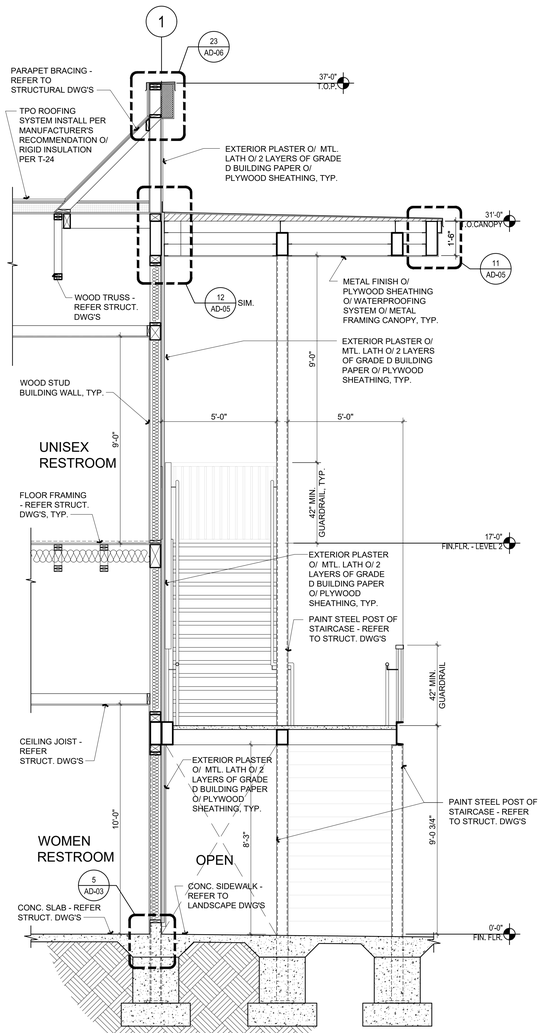

WALL SECTION | SCALE: 3/8"=1'-0" | 1

ktgy

17911 Von Karman Ave.
Suite 200
Irvine, CA 92614
ktgy.com
949.851.2133

ktgy Project Number	20250428
Contact	DORINA WATSON
Email	dwatson@ktgy.com
Senior Director	DAVID SCHMITZ
Designer	RUSSEL ROSALES

Developer
SEDC
23906 SOBOBA ROAD
SAN JACINTO, CA 92581

PHONE: (951) 663-2058

SOBOBA SOVOVATUM VILLAGE PHASE-2

SAN JACINTO, CA

No.	DATE	DESCRIPTION

Client is responsible for notifying architect in writing for any discovered errors or omissions in the plans and specifications during construction of the project. Failure for Client to notify Architect of any known errors or omissions in the plans or specifications, and proceeding with constructing the portion of work shown in the plans or specifications containing known errors or omissions shall be a waiver by Client for any liability of Architect for such known errors or omissions. Client releases Architect for any liability for such portions of work, and Architect shall not be liable for any delay damages, change orders, repair costs, removal or demolition costs, or replacement of any such portions of work.

2026-05-26, ISSUED FOR BID

WALL SECTIONS

A4-12

Printed: 1/7/2026 4:29:08 PM

COPYRIGHT 2024 KTGY GROUP INC. These plans and specifications are protected by United States copyright law and may not be used, reproduced, distributed, transmitted, displayed, or modified in any way without the prior written consent of KTGY Group, Inc. or the authorized copyright holder or licensee.

ROOM FINISH SCHEDULE

ROOM NAME #	FLOOR	BASE	WALLS NORTH	WALLS EAST	WALLS SOUTH	WALLS WEST	CEILING	REMARKS
FIRST FLOOR								
GAMING 100	CPT-2	RB2	P003	P003	P003	P003	ACT-1/ P002	LEVEL 4 GYPSUM BOARD
MAN TRAP 101	ECON2	RB1	P001	P001	P001	P001	ACT2/ P001	LEVEL 4 GYPSUM BOARD
CASHIER 102	ECON2	RB1	P001	P001	P001	P001	ACT2/ P001	LEVEL 4 GYPSUM BOARD
MEN RESTROOM 103	PFT1	PTB1	PWT2/ PWT3/ P001	PWT2/ PWT3/ P001	PWT2/ PWT3/ P001	PWT2/ PWT3/ P001	P001S	PWT3 WALL ACCENT. LEVEL 4 GYPSUM BOARD
WOMEN RESTROOM 104	PFT1	PTB1	PWT2/ PWT3/ P001	PWT2/ PWT3/ P001	PWT2/ PWT3/ P001	PWT2/ PWT3/ P001	P001S	PWT3 WALL ACCENT. LEVEL 4 GYPSUM BOARD
JANITOR 105	ECON2	RB1	P001S	P001S	P001S	P001S	P001S	LEVEL 4 GYPSUM BOARD
ELECTRICAL ROOM 106	ECON1	-	P001	P001	P001	P001	OPEN	LEVEL 3 GYPSUM BOARD
FIRE RISER ROOM 107	ECON1	-	P001	P001	P001	P001	OPEN	LEVEL 3 GYPSUM BOARD
ELEVATOR LOBBY 108	CPT-1	RB1	P001	P001	P001	P001	ACT2/ P001	LEVEL 4 GYPSUM BOARD
ELEVATOR MACHINE ROOM 109	ECON1	-	P001	P001	P001	P001	P001	LEVEL 3 GYPSUM BOARD
SECOND FLOOR								
OPEN OFFICE AREA 200	CPT-1	RB1	P001	P001	P001	P001	ACT2/ P001	LEVEL 5 GYPSUM BOARD
OFFICE #1 201	CPT-1	RB1	P001	P001	P001	P001	ACT2/ P001	LEVEL 5 GYPSUM BOARD
OFFICE #2 202	CPT-1	RB1	P001	P001	P001	P001	ACT2/ P001	LEVEL 5 GYPSUM BOARD
OFFICE #3 203	CPT-1	RB1	P001	P001	P001	P001	ACT2/ P001	LEVEL 5 GYPSUM BOARD
CONFERENCE ROOM 204	CPT-1	RB1	P001	P001	P001	P001	ACT2/ P001	LEVEL 5 GYPSUM BOARD
OFFICE #4 205	CPT-1	RB1	P001	P001	P001	P001	ACT2/ P001	LEVEL 5 GYPSUM BOARD
OFFICE #5 206	CPT-1	RB1	P001	P001	P001	P001	ACT2/ P001	LEVEL 5 GYPSUM BOARD
KITCHENETTE & BREAK AREA 207	LVT2	RB1	PWT1/ P001S	-	-	PWT1/ P001S	ACT3	LEVEL 5 GYPSUM BOARD
UNISEX RESTROOM #1 208	PFT1	PTB1	PWT2/ PWT3/ P001	PWT2/ PWT3/ P001	PWT2/ PWT3/ P001	PWT2/ PWT3/ P001	P001S	PWT3 WALL ACCENT. LEVEL 4 GYPSUM BOARD
UNISEX RESTROOM #2 209	PFT1	PTB1	PWT2/ PWT3/ P001	PWT2/ PWT3/ P001	PWT2/ PWT3/ P001	PWT2/ PWT3/ P001	P001S	PWT3 WALL ACCENT. LEVEL 4 GYPSUM BOARD
JANITOR 210	LVT1	RB1	P001S	P001S	P001S	P001S	P001S	LEVEL 4 GYPSUM BOARD

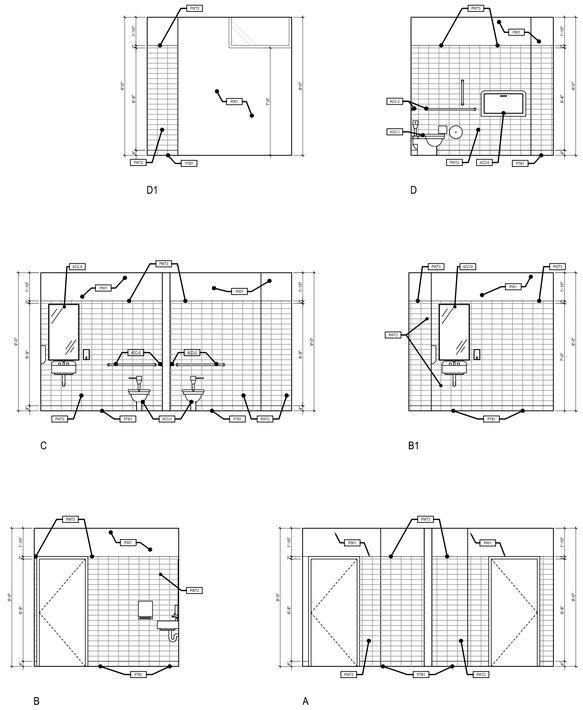

NOTE:
REFER SHEET A2-13 FOR
RCP FINISH SCHEDULE

UNSEX RESTROOM INTERIOR ELEVATIONS | SCALE: 1/2"=1'-0" | 3

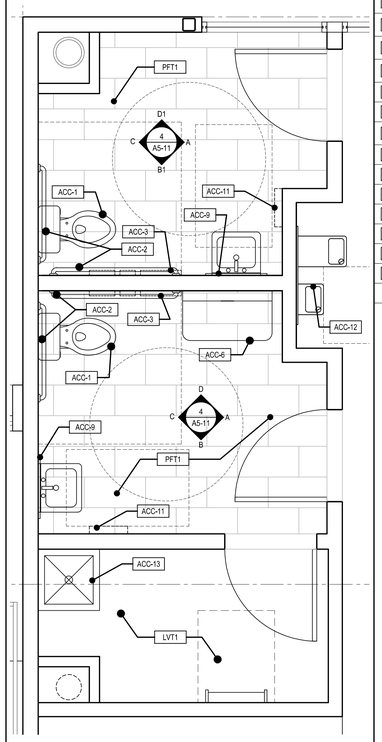

NOTE:
REFER SHEET A2-13 FOR
RCP FINISH SCHEDULE

UNISEX RESTROOM PLAN | SCALE: 1/2"=1'-0" | 2

ACCESSORY LEGEND

SYMBOL	DSCRIPTION	COLOR/ FINISH
ACC-1	FLOOR MOUNTED WATER CLOSET - REFER PLUMBING DWG'S	
ACC-2	TOILET GRAB BAR	
ACC-3	SURFACE MOUNTED TOILET SEAT COVER DISPENSER	
ACC-4	PARTITION MOUNTED SEAT COVER & TOILET PAPER DISPENSER	
ACC-5	WATERLESS URINAL - REFER PLUMBING DWG'S	
ACC-6	FOLDING DIAPER CHANGING STATION	
ACC-7	GRANITE COUNTER TOP	
ACC-8	UNDER MOUNTED SINK	
ACC-9	STAINLESS STEEL FRAMED MIRRORS	
ACC-10	SURFACE MOUNTED LIQUID SOAP DISPENSER	
ACC-11	SURFACE MOUNTED HAND DRYER	
ACC-12	DRINKING FOUNTAIN	
ACC-13	MOP SINK - REFER PLUMBING DWG'S	
ACC-14	STAINLESS STEEL SHELF WITH MOP & BROOM HOLDERS	

℄	CENTERLINE	FOC	FACE OF CONCRETE
EOS	EDGE OF SLAB	FOM	FACE OF MASONRY
EQ	EQUAL	FOW	FACE OF WALL
FE	FIRE EXTINGUISHER	RO	ROUGH OPENING
FOS	FACE OF STUD	WP	WORK POINT
FOF	FACE OF FINISH		

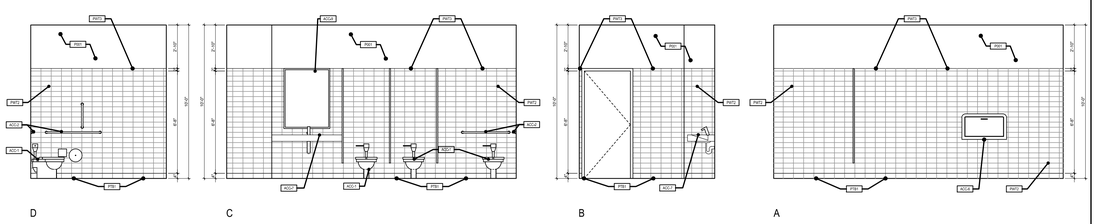

NOTE:
REFER SHEET A2-13 FOR
RCP FINISH SCHEDULE

WOMEN RESTROOM INTERIOR ELEVATIONS | SCALE: 1/2"=1'-0" | 5

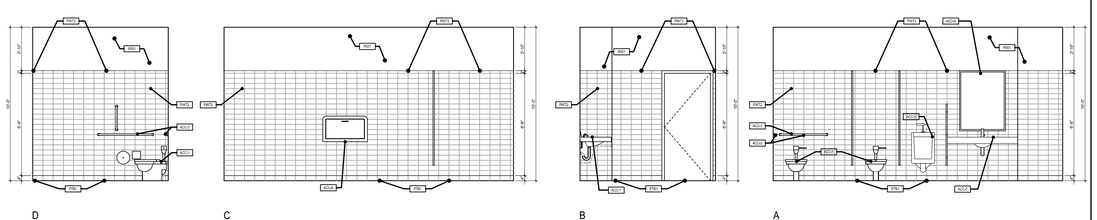

NOTE:
REFER SHEET A2-13 FOR
RCP FINISH SCHEDULE

MEN RESTROOM INTERIOR ELEVATIONS | SCALE: 1/2"=1'-0" | 4

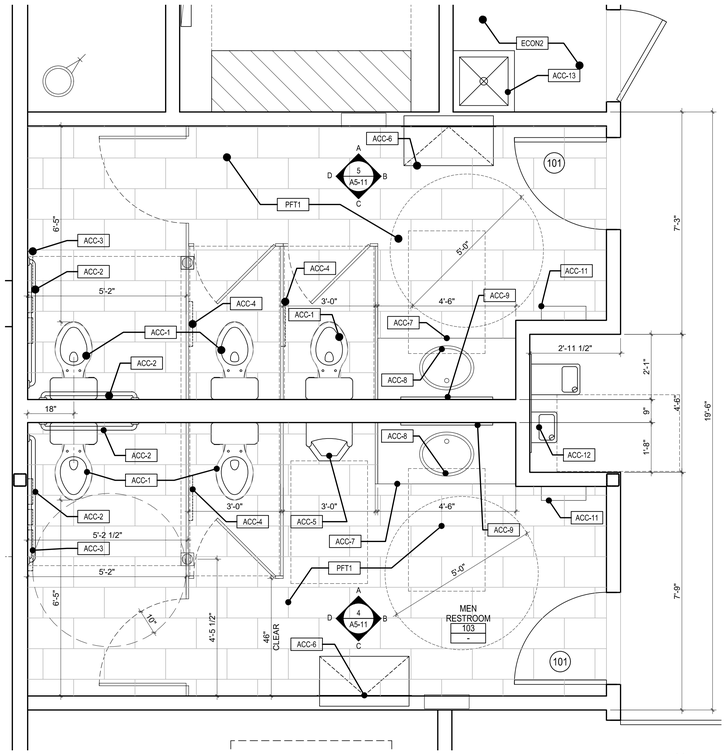

NOTE:
REFER SHEET A2-13 FOR
RCP FINISH SCHEDULE

RESTROOM FLOOR PLAN - LEVEL 1 | SCALE: 1/2"=1'-0" | 1

ktgy

17911 Von Karman Ave.
Suite 200
Irvine, CA 92614
ktgy.com
949.851.2133

ktgy Project Number 20250428
Contact DORINA WATSON
Email dwatson@ktgy.com
Senior Director DAVID SCHMITZ
Designer RUSSEL ROSALES

Developer
SEDC
23906 SOBOBA ROAD
SAN JACINTO, CA 92581

PHONE: (951) 663-2058

SOBOBA SOVOVATUM VILLAGE PHASE-2

SAN JACINTO, CA

No.	DATE	DESCRIPTION

Client is responsible for notifying architect in writing for any discovered errors or omissions in the plans and specifications during construction of the project. Failure for Client to notify Architect of any known errors or omissions in the plans or specifications, and proceeding with constructing the portion of work shown in the plans or specifications containing known errors or omissions shall be a waiver by Client for any liability of Architect for such known errors or omissions. Client releases Architect for any liability for such portions of work, and Architect shall not be liable for any delay damages, change orders, repair costs, removal or demolition costs, or replacement of any such portions of work.

2026-05-26, ISSUED FOR BID

ENLARGED RESTROOM PLANS AND RESTROOM ELEVATIONS

A5-11

Printed: 1/7/2026 4:29:00 PM

COPYRIGHT 2024 KTGY GROUP INC. These plans and specifications are protected by United States copyright law and may not be used, reproduced, distributed, transmitted, displayed, or modified in any way without the prior written consent of KTGY Group, Inc. or the authorized copyright holder or licensee.

ROOM FINISH SCHEDULE

ROOM NAME #	FLOOR	BASE	WALLS NORTH	WALLS EAST	WALLS SOUTH	WALLS WEST	CEILING	REMARKS
SECOND FLOOR								
KITCHENETTE & BREAK AREA 207	LVT2	RB1	PWT1/ P001S	-	-	PWT1/ P001S	ACT3	LEVEL 5 GYPSUM BOARD

KITCHENETTE KEYNOTES

1. WOOD MILLWORK CABINETRY
2. COUNTERTOP
3. TILE BACKSPLASH
4. DOUBLE SINK - REFER PLUMBING DWG'S W/ CLEAR FOR ADA ACCESSIBLE UNDER

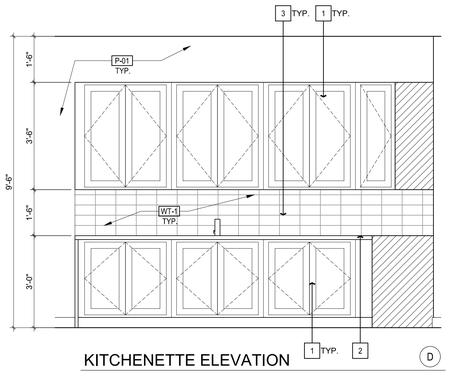

KITCHENETTE ELEVATION

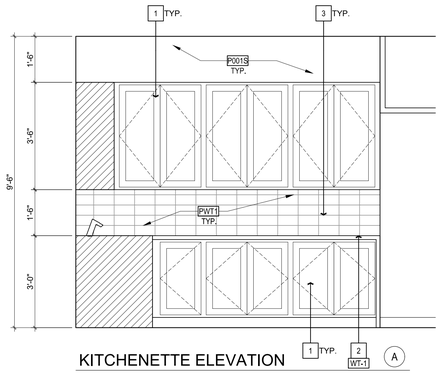

KITCHENETTE ELEVATION

NOTE:
REFER SHEET A2-13 FOR RCP FINISH SCHEDULE

KITCHENETTE INTERIOR ELEVATIONS | SCALE: 1/2"=1'-0" | 5

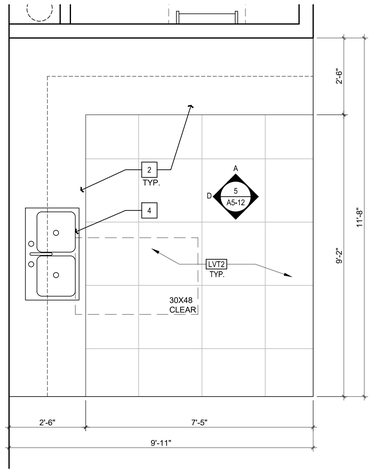

NOTE:
REFER SHEET A2-13 FOR RCP FINISH SCHEDULE

ENLARGED KITCHENETTE & BREAK AREA | SCALE: 1/2"=1'-0" | 4

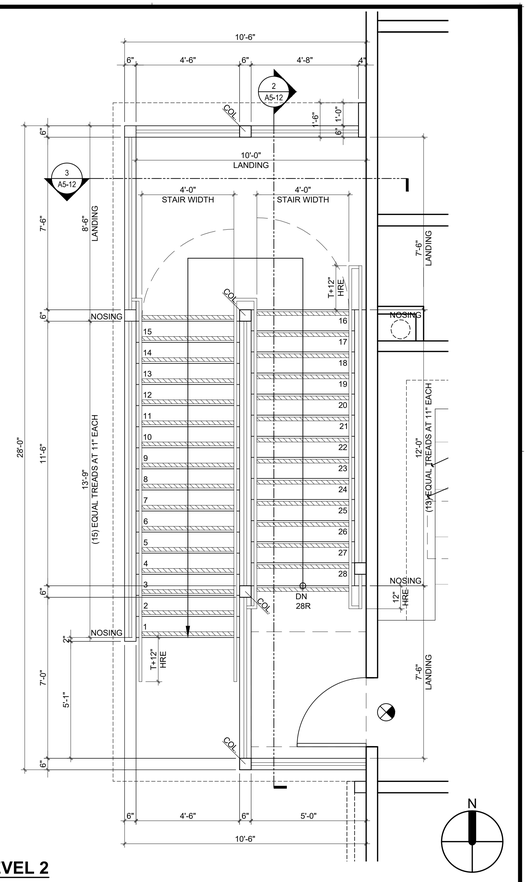

LEVEL 2

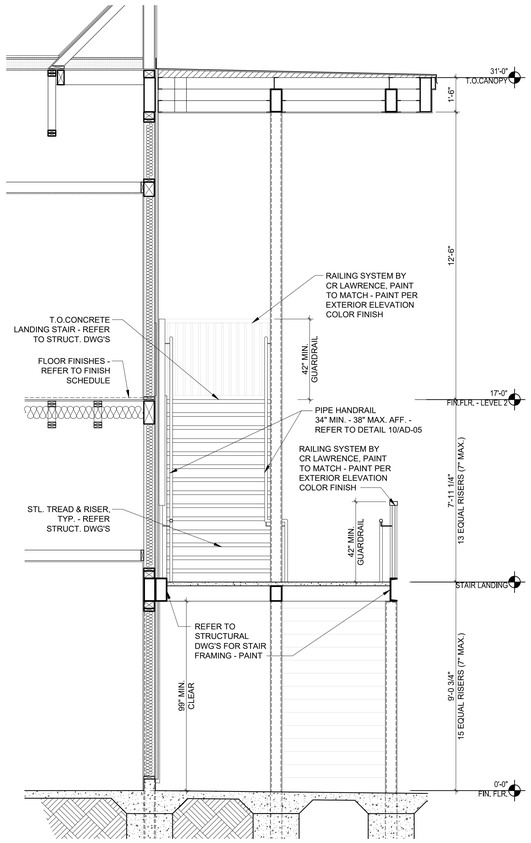

STAIRS SECTION | SCALE: 3/8"=1'-0" | 3

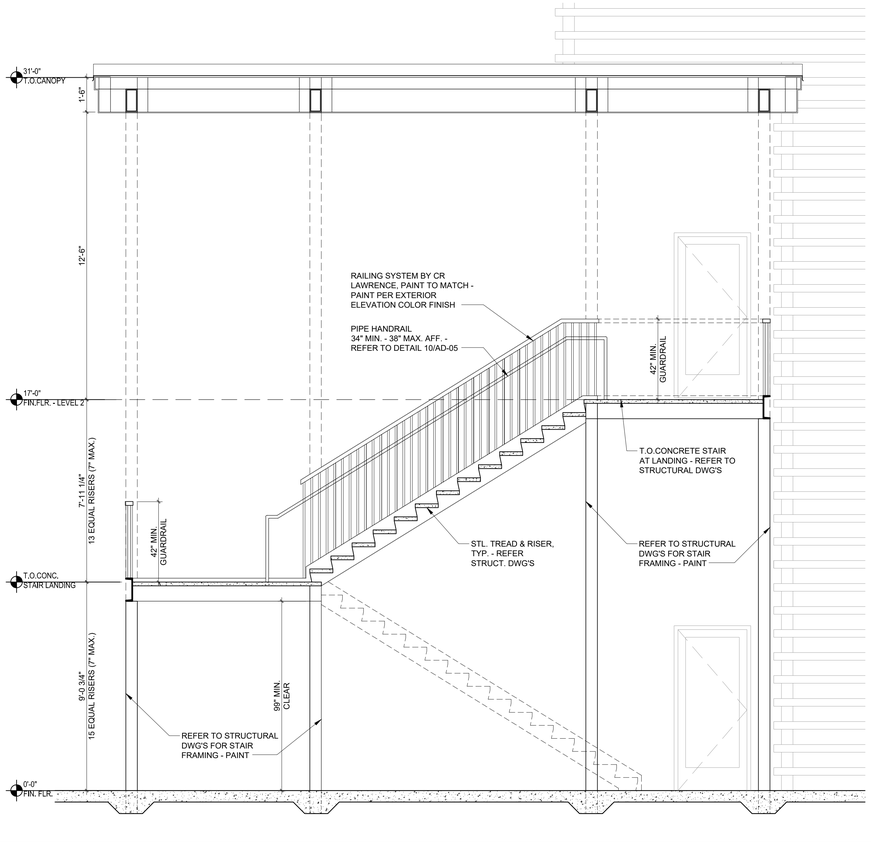

STAIRS SECTION | SCALE: 3/8"=1'-0" | 2

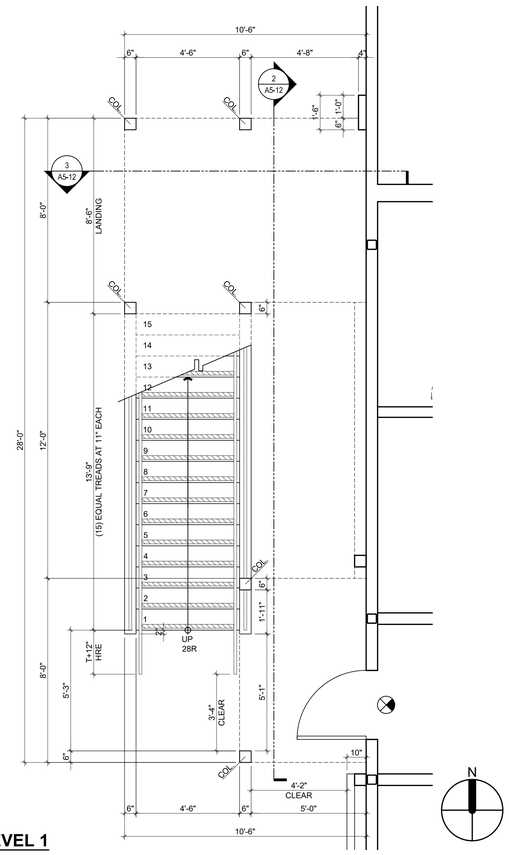

LEVEL 1

STAIRS PLAN | SCALE: 3/8"=1'-0" | 1

ktgy

17911 Von Karman Ave.
Suite 200
Irvine, CA 92614
ktgy.com
949.851.2133

ktgy Project Number	20250428
Contact	DORINA WATSON
Email	dwatson@ktgy.com
Senior Director	DAVID SCHMITZ
Designer	RUSSEL ROSALES

Developer
SEDC
23906 SOBOBA ROAD
SAN JACINTO, CA 92581

PHONE: (951) 663-2058

SOBOBA SOVOVATUM VILLAGE PHASE-2

SAN JACINTO, CA

No.	DATE	DESCRIPTION

Client is responsible for notifying architect in writing for any discovered errors or omissions in the plans and specifications during construction of the project. Failure for Client to notify Architect of any known errors or omissions in the plans or specifications, and proceeding with constructing the portion of work shown in the plans or specifications containing known errors or omissions shall be a waiver by Client for any liability of Architect for such known errors or omissions. Client releases Architect for any liability for such portions of work, and Architect shall not be liable for any delay damages, change orders, repair costs, removal or demolition costs, or replacement of any such portions of work.

2026-05-26, ISSUED FOR BID

STAIRS PLAN AND ENLARGED KITCHENETTE

A5-12

Revised: 1/7/2026 4:29:06 PM

COPYRIGHT 2024 KTGY GROUP INC. These plans and specifications are protected by United States copyright law and may not be used, reproduced, distributed, transmitted, displayed, or modified in any way without the prior written consent of KTGY Group, Inc. or the authorized copyright holder or licensee.

ROOM FINISH SCHEDULE

ROOM NAME #	FLOOR	BASE	WALLS NORTH	WALLS EAST	WALLS SOUTH	WALLS WEST	CEILING	REMARKS
FIRST FLOOR								
GAMING 100	CPT-2	RB2	P003	P003	P003	P003	ACT-1/ P002	LEVEL 4 GYPSUM BOARD
MAN TRAP 101	ECON2	RB1	P001	P001	P001	P001	ACT2/ P001	LEVEL 4 GYPSUM BOARD
CASHIER 102	ECON2	RB1	P001	P001	P001	P001	ACT2/ P001	LEVEL 4 GYPSUM BOARD
MEN RESTROOM 103	PFT1	PTB1	PWT2/ PWT3/ P001	PWT2/ PWT3/ P001	PWT2/ PWT3/ P001	PWT2/ PWT3/ P001	P001S	PWT3 WALL ACCENT. LEVEL 4 GYPSUM BOARD
WOMEN RESTROOM 104	PFT1	PTB1	PWT2/ PWT3/ P001	PWT2/ PWT3/ P001	PWT2/ PWT3/ P001	PWT2/ PWT3/ P001	P001S	PWT3 WALL ACCENT. LEVEL 4 GYPSUM BOARD
JANITOR 105	ECON2	RB1	P001S	P001S	P001S	P001S	P001S	LEVEL 4 GYPSUM BOARD
ELECTRICAL ROOM 106	ECON1	-	P001	P001	P001	P001	OPEN	LEVEL 3 GYPSUM BOARD
FIRE RISER ROOM 107	ECON1	-	P001	P001	P001	P001	OPEN	LEVEL 3 GYPSUM BOARD
ELEVATOR LOBBY 108	CPT-1	RB1	P001	P001	P001	P001	ACT2/ P001	LEVEL 4 GYPSUM BOARD
ELEVATOR MACHINE ROOM 109	ECON1	-	P001	P001	P001	P001	P001	LEVEL 3 GYPSUM BOARD
SECOND FLOOR								
OPEN OFFICE AREA 200	CPT-1	RB1	P001	P001	P001	P001	ACT2/ P001	LEVEL 5 GYPSUM BOARD
OFFICE #1 201	CPT-1	RB1	P001	P001	P001	P001	ACT2/ P001	LEVEL 5 GYPSUM BOARD
OFFICE #2 202	CPT-1	RB1	P001	P001	P001	P001	ACT2/ P001	LEVEL 5 GYPSUM BOARD
OFFICE #3 203	CPT-1	RB1	P001	P001	P001	P001	ACT2/ P001	LEVEL 5 GYPSUM BOARD
CONFERENCE ROOM 204	CPT-1	RB1	P001	P001	P001	P001	ACT2/ P001	LEVEL 5 GYPSUM BOARD
OFFICE #4 205	CPT-1	RB1	P001	P001	P001	P001	ACT2/ P001	LEVEL 5 GYPSUM BOARD
OFFICE #5 206	CPT-1	RB1	P001	P001	P001	P001	ACT2/ P001	LEVEL 5 GYPSUM BOARD
KITCHENETTE & BREAK AREA 207	LVT2	RB1	PWT1/ P001S	-	-	PWT1/ P001S	ACT3	LEVEL 5 GYPSUM BOARD
UNISEX RESTROOM #1 208	PFT1	PTB1	PWT2/ PWT3/ P001	PWT2/ PWT3/ P001	PWT2/ PWT3/ P001	PWT2/ PWT3/ P001	P001S	PWT3 WALL ACCENT. LEVEL 4 GYPSUM BOARD
UNISEX RESTROOM #2 209	PFT1	PTB1	PWT2/ PWT3/ P001	PWT2/ PWT3/ P001	PWT2/ PWT3/ P001	PWT2/ PWT3/ P001	P001S	PWT3 WALL ACCENT. LEVEL 4 GYPSUM BOARD
JANITOR 210	LVT1	RB1	P001S	P001S	P001S	P001S	P001S	LEVEL 4 GYPSUM BOARD

VERTICAL CIRCULATION SCHEDULE

ID	MANUFACTURER	MODEL	CAPACITY	OPENING TYPE	SPEED (FT./MIN)	POWER	SHAFT DIMENSIONS (WIDTH)	SHAFT DIMENSIONS (DEPTH)	CAB INT. DIMENSIONS (WIDTH)	CAB INT. DIMENSIONS (DEPTH)	PIT DEPTH	CAB HEIGHT	DOOR HEIGHT	DOOR WIDTH	OVERHEAD BELOW HOIST BM
ELEVATOR (PASSENGER)	SCHINDLER	330A	2,100 LBS	SINGLE SPEED SIDE OPENING	150 FPM	460 V 3 PHASE	8'-0"	7'-0"	6'-9"	5'-6"	4'-0"	8'-0"	7'-0" CLR	3'-0" CLR	12'-3"

NOTE: EMERGENCY ELEVATOR COMMUNICATION SYSTEMS FOR THE DEAF, HARD OF HEARING AND SPEECH IMPAIRED PER IBC 3001.2:
THE SYSTEM SHALL PROVIDE VISIBLE TEXT AND AUDIBLE MODES THAT MEET ALL OF THE FOLLOWING REQUIREMENTS:
1.WHEN OPERATING IN EACH MODE, INCLUDE A LIVE INTERACTIVE SYSTEM THAT ALLOWS BACK AND FORTH CONVERSATION BETWEEN THE ELEVATOR OCCUPANTS AND EMERGENCY PERSONNEL.
2.IS OPERATIONAL WHEN THE ELEVATOR IS OPERATIONAL.
3.ALLOWS ELEVATOR OCCUPANTS TO SELECT THE TEXT-BASED OR AUDIBLE MODE DEPENDING ON THEIR COMMUNICATION NEEDS TO INTERACT WITH EMERGENCY PERSONNEL.

SYMBOLS

STUD WALL - REFER STRUCTURAL DWG'S

XX DOOR TAG — - / A6-11

XX STOREFRONT TAG — - / A6-11

XX WALL TAG — - / AD-01

℄	CENTERLINE	FOC	FACE OF CONCRETE
EOS	EDGE OF SLAB	FOM	FACE OF MASONRY
EQ	EQUAL	FOW	FACE OF WALL
FE	FIRE EXTINGUISHER	RO	ROUGH OPENING
FOS	FACE OF STUD	WP	WORK POINT
FOF	FACE OF FINISH		

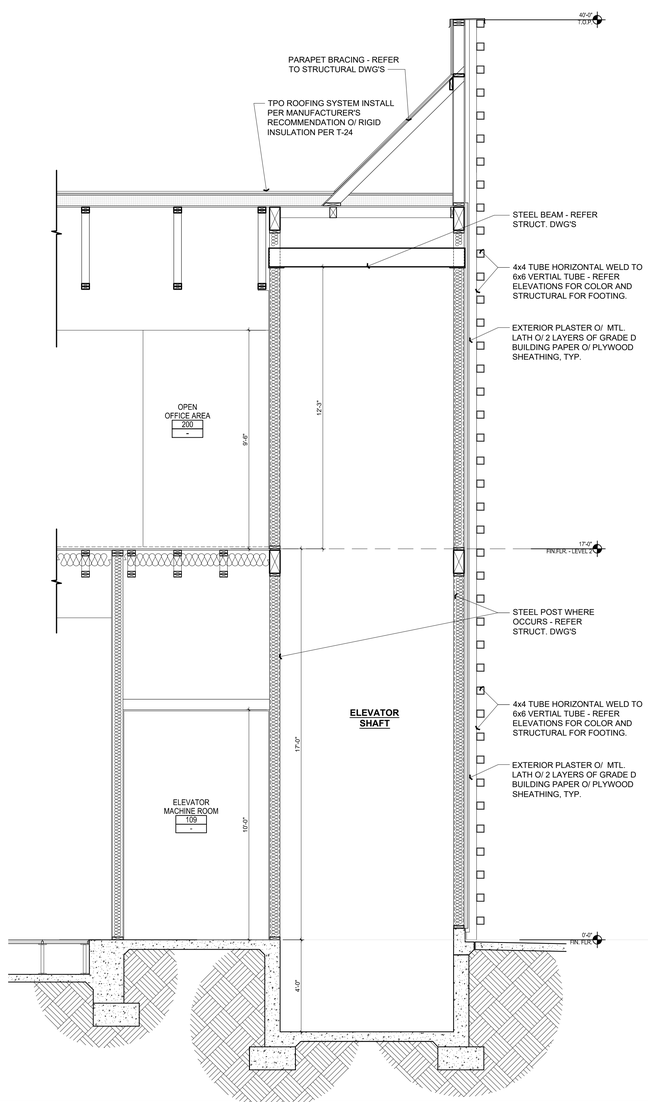

ELEVATOR SECTION | SCALE: 3/8"=1'-0" | 2

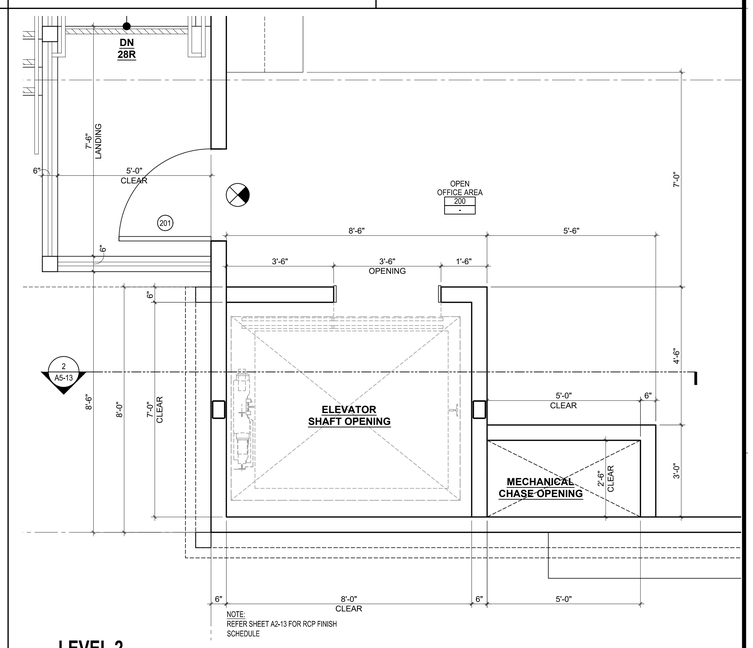

LEVEL 2

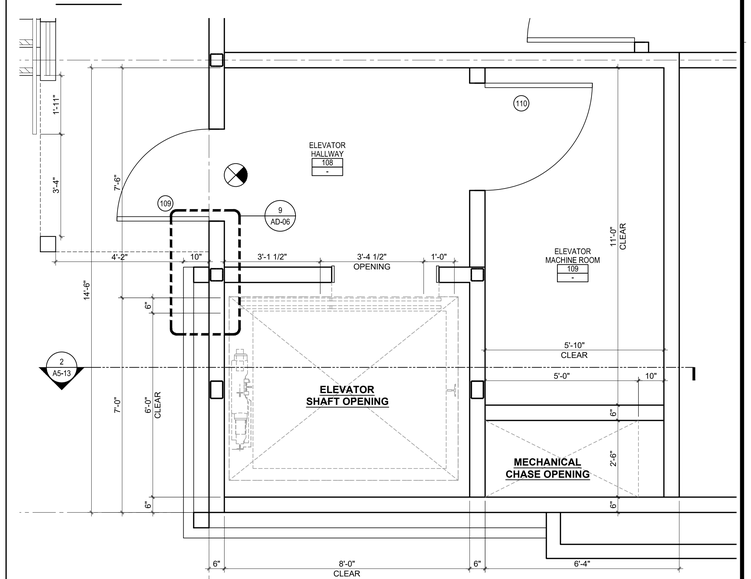

LEVEL 1

ELEVATOR & MACHINE ROOM FLOOR PLAN | SCALE: 1/2"=1'-0" | 1

ktgy

17911 Von Karman Ave.
Suite 200
Irvine, CA 92614
ktgy.com
949.851.2133

ktgy Project Number 20250428
Contact DORINA WATSON
Email dwatson@ktgy.com
Senior Director DAVID SCHMITZ
Designer RUSSEL ROSALES

Developer
SEDC
23906 SOBOBA ROAD
SAN JACINTO, CA 92581

PHONE: (951) 663-2058

SOBOBA SOVOVATUM VILLAGE PHASE-2

SAN JACINTO, CA

No.	DATE	DESCRIPTION

Client is responsible for notifying architect in writing for any discovered errors or omissions in the plans and specifications during construction of the project. Failure for Client to notify Architect of any known errors or omissions in the plans or specifications, and proceeding with constructing the portion of work shown in the plans or specifications containing known errors or omissions shall be a waiver by Client for any liability of Architect for such known errors or omissions. Client releases Architect for any liability for such portions of work, and Architect shall not be liable for any delay damages, change orders, repair costs, removal or demolition costs, or replacement of any such portions of work.

2026-05-26, ISSUED FOR BID

ELEVATOR PLANS AND SECTION

A5-13

Printed: 1/7/2026 4:20:06 PM

COPYRIGHT 2024 KTGY GROUP INC. These plans and specifications are protected by United States copyright law and may not be used, reproduced, distributed, transmitted, displayed, or modified in any way without the prior written consent of KTGY Group, Inc. or the authorized copyright holder or licensee.

MATERIALS AND FINISH LEGEND

KEY NAME	MATERIAL TYPE	MANUFACTURER	STYLE	COLOR/NO	FINISH	INSTALLATION	SIZE	ROOM/ AREA	DESCRIPTION / NOTES
MILLWORK FINISH									
PL1	PLASTIC LAMINATE	NEVAMAR	PANOLAM	APPALACHIAN-WALNUT	HPL			KITCHENETTE	
WALL / FLOORING BASE									
PTB1	6" TILE BASE	DALTILE	CLASSIC COLORWHEEL COL	ARTIC WHITE 0790			6"X6"		#60 CHARCOAL GROUT FROM CUSTOM BUILDING PRODUCTS PROVIDE CONTINOUS SELF COVING 6" BASE WITH RADIUS COVE
RB1	RUBBER BASE	THERMOSET - TYPE TS	#20 CHARCOAL				4" HIGH	OFFICE	PER MANUFACTURERS INSTALLATION RECOMMENDATIONS AND INSTRUCTIONS
RB2	RUBBER BASE	THERMOSET - TYPE TS	#284 GANACHE				4" HIGH	GAMING	PER MANUFACTURERS INSTALLATION RECOMMENDATIONS AND INSTRUCTIONS
SOLID SURFACE									
SS1	QUARTZ	DALTILE	ONCE QUARTZ	CHATEAU				KITCHENETTE, RESTROOM SINK	
TILE									
PWT1	CERAMIC TILE	VILLA	ZEUEGE CERAMIC TILE	AGAVE				KITCHENETTE, BACKSPLASH	#544 ROLLING FOG, GROUT FROM CUSTOM BUILDING PRODUCTS, SEMI-POLISHED AND 6" COVE BASE
PWT2	CERAMIC TILE	DALTILE	COLOR WHEEL CLASSIC	ARCTIC WHITE	MATTE FINISH			RESTROOM WALLS	#60 CHARCOAL GROUT STAGGERED BRICK JOINT PATTERN. 4" BULLNOSE AT RESTROOMS
PWT3	CERAMIC TILE	DALTILE	COLOR WHEEL CLASSIC	ARTISAN BROWN	MATTE FINISH			RESTROOM WALL ACCENT	#333 ALABASTER GROUT FROM CUSTOM BUILDING PRODUCTS
FIBERGLASS									
FRP-1	FIBERGLASS	MARLITE		P-100 WHITE				JANITOR CLOSETS (2)	
FLOOR FINISH									
CPT-1	CARPET	SHAW CONTRACT	FLOW OF TIME	CRAFT 01516		ASHLAR	9" X 36"	OFFICE, ELEVATOR LOBBY	
CPT-2	CARPET	ASM's CASINO DIVISION						GAMING	
ECON1	EXPOSED CONCRETE							UTILITY	
ECON2	POLISHED CONCRETE	LATICRETE	PERMAGUARD SPS	BEIGE				STAIRS, CASHIER, MAN TRAP	PROVIDE MOCK-UP FOR OWNER/ARCHITECT APPROVAL
LVT1	VINYL TILE SHEET	ARMSTRONG	STRATAMAX PRO ASP 17	PEARL	LOW GLOSS		12" WIDE	SERVICE AREAS	
LVT2	LUXURY VINYL TILE	INTERFACE	NORTHER GRAIN 4.5 MM	NORDIC WASH			25 CM X 1 CM	KITCHENETTE	
PFT1	FLOOR TILE	TILEBAR	KARO OLIVE GRAY	GRAY	MATTE		12" X 24"	RESTROOMS	GROUT FROM CUSTOM BUILDING PRODUCTS. PROVIDE 6" COVE BASE AND BULLNOSE TRIM.
TR1	METAL EDGE	GENOTECK	EDGE DIVIDER 303	SATIN #66 BRONZE 312			3/8"	WHERE OCCURS	METAL EDGE BETWEEN CARPET AND TILE
PAINT									
P001	PAINT	SHERWIN WILLIAMS		SW7551 GREEK VILLA	EGGSHELL			OFFICE	
P001S	PAINT	SHERWIN WILLIAMS		SW7551 GREEK VILLA	SEMI GLOSS			KITCHENETTE, RESTROOMS	
P002	PAINT	SHERWIN WILLIAMS		SW7048 URBANE BRONZE	EGGSHELL			CEILING TILE IN GAMING	
P003	PAINT	SHERWIN WILLIAMS		SW7640 FAWN BRINDLE				GAMING	
ACOUSTICAL CEILING TILE									
ACT1	ACOUSTICAL CEILING TILE	ARMSTRONG	OPTIMA CONCEALED	SW7048 URBANE BRONZE		Prelude® XL® HD 15/16" suspension system	24" X 24"	GAMING	
ACT2	ACOUSTICAL CEILING TILE	ARMSTRONG	OPTIMA CONCEALED	SW7551 GREEK VILLA		Prelude® XL® HD 15/16" suspension system	24" X 24"	OFFICE	
ACT3	ACOUSTICAL CEILING TILE	ARMSTRONG	OPTIMA CONCEALED	SW7551 GREEK VILLA	CLEANABLE /WET	Prelude® XL® HD 15/16" suspension system	24" X 24"	KITCHENETTE	

ROOM FINISH SCHEDULE

ROOM NAME #	FLOOR	BASE	WALLS NORTH	WALLS EAST	WALLS SOUTH	WALLS WEST	CEILING	REMARKS
FIRST FLOOR								
GAMING 100	CPT-2	RB2	P003	P003	P003	P003	ACT-1/ P002	LEVEL 4 GYPSUM BOARD
MAN TRAP 101	ECON2	RB1	P001	P001	P001	P001	ACT2/ P001	LEVEL 4 GYPSUM BOARD
CASHIER 102	ECON2	RB1	P001	P001	P001	P001	ACT2/ P001	LEVEL 4 GYPSUM BOARD
MEN RESTROOM 103	PFT1	PTB1	PWT2/ PWT3/ P001	PWT2/ PWT3/ P001	PWT2/ PWT3/ P001	PWT2/ PWT3/ P001	P001S	PWT3 WALL ACCENT. LEVEL 4 GYPSUM BOARD
WOMEN RESTROOM 104	PFT1	PTB1	PWT2/ PWT3/ P001	PWT2/ PWT3/ P001	PWT2/ PWT3/ P001	PWT2/ PWT3/ P001	P001S	PWT3 WALL ACCENT. LEVEL 4 GYPSUM BOARD
JANITOR 105	ECON2	RB1	P001S	P001S	P001S	P001S	P001S	LEVEL 4 GYPSUM BOARD
ELECTRICAL ROOM 106	ECON1	-	P001	P001	P001	P001	OPEN	LEVEL 3 GYPSUM BOARD
FIRE RISER ROOM 107	ECON1	-	P001	P001	P001	P001	OPEN	LEVEL 3 GYPSUM BOARD
ELEVATOR LOBBY 108	CPT-1	RB1	P001	P001	P001	P001	ACT2/ P001	LEVEL 4 GYPSUM BOARD
ELEVATOR MACHINE ROOM 109	ECON1	-	P001	P001	P001	P001	P001	LEVEL 3 GYPSUM BOARD
SECOND FLOOR								
OPEN OFFICE AREA 200	CPT-1	RB1	P001	P001	P001	P001	ACT2/ P001	LEVEL 5 GYPSUM BOARD
OFFICE #1 201	CPT-1	RB1	P001	P001	P001	P001	ACT2/ P001	LEVEL 5 GYPSUM BOARD
OFFICE #2 202	CPT-1	RB1	P001	P001	P001	P001	ACT2/ P001	LEVEL 5 GYPSUM BOARD
OFFICE #3 203	CPT-1	RB1	P001	P001	P001	P001	ACT2/ P001	LEVEL 5 GYPSUM BOARD
CONFERENCE ROOM 204	CPT-1	RB1	P001	P001	P001	P001	ACT2/ P001	LEVEL 5 GYPSUM BOARD
OFFICE #4 205	CPT-1	RB1	P001	P001	P001	P001	ACT2/ P001	LEVEL 5 GYPSUM BOARD
OFFICE #5 206	CPT-1	RB1	P001	P001	P001	P001	ACT2/ P001	LEVEL 5 GYPSUM BOARD
KITCHENETTE & BREAK AREA 207	LVT2	RB1	PWT1/ P001S	-	-	PWT1/ P001S	ACT3	LEVEL 5 GYPSUM BOARD
UNISEX RESTROOM #1 208	PFT1	PTB1	PWT2/ PWT3/ P001	PWT2/ PWT3/ P001	PWT2/ PWT3/ P001	PWT2/ PWT3/ P001	P001S	PWT3 WALL ACCENT. LEVEL 4 GYPSUM BOARD
UNISEX RESTROOM #2 209	PFT1	PTB1	PWT2/ PWT3/ P001	PWT2/ PWT3/ P001	PWT2/ PWT3/ P001	PWT2/ PWT3/ P001	P001S	PWT3 WALL ACCENT. LEVEL 4 GYPSUM BOARD
JANITOR 210	LVT1	RB1	P001S	P001S	P001S	P001S	P001S	LEVEL 4 GYPSUM BOARD

INTERIOR KEYNOTES

1. WOOD MILLWORK CABINETRY
2. COUNTERTOP
3. TILE BACKSPLASH
4. INTERIOR DOOR - PAINT
5. EXTERIOR STOREFRONT DOOR AND WINDOW SYSTEM BEYOND - REFER DOOR AND WINDOW SCHEDULES SHEET A7-11
6. ELEVATOR DOOR - REFER TO ELEVATOR SPECIFICATION

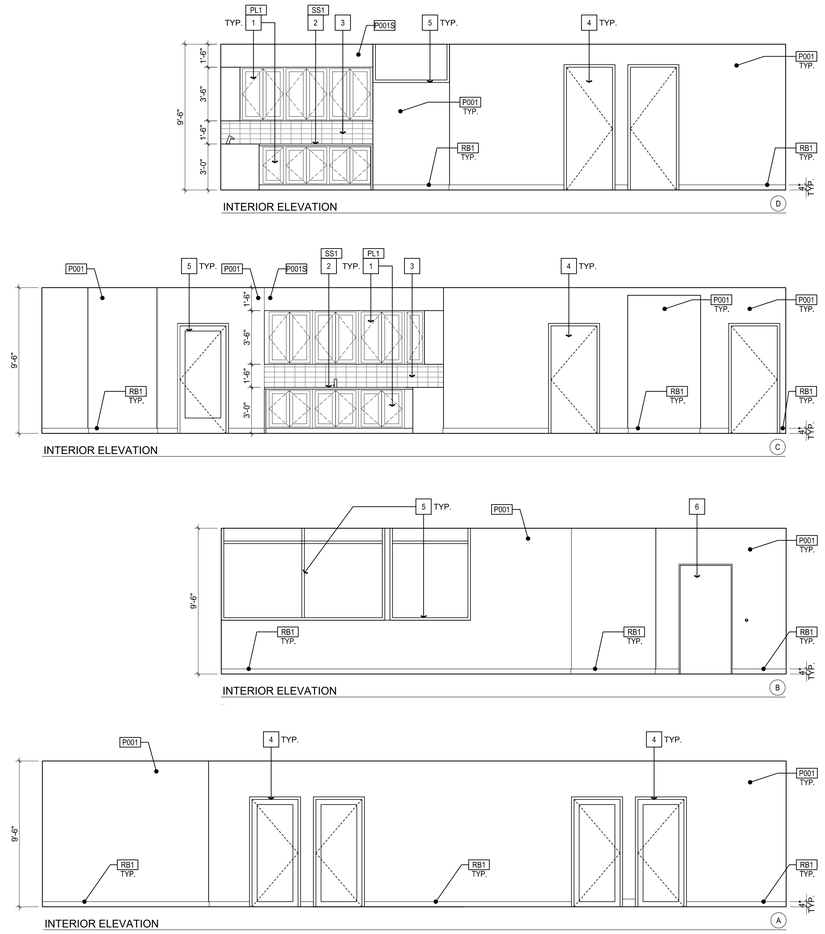

INTERIOR ELEVATIONS AT SECOND FLOOR | SCALE: 1/4"=1'-0" | 2

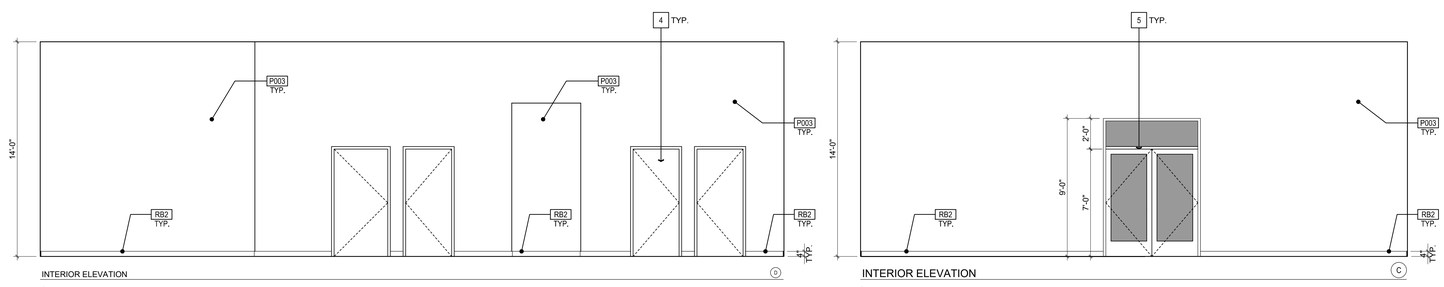

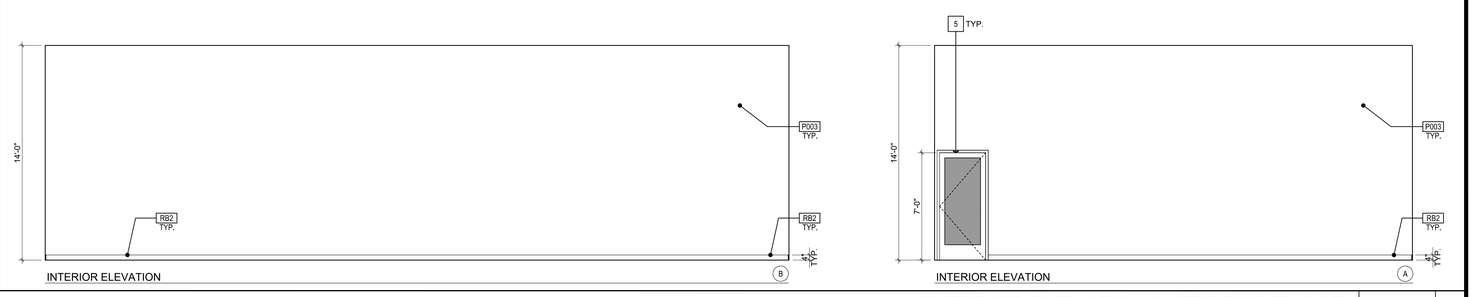

INTERIOR ELEVATIONS AT FIRST FLOOR | SCALE: 1/4"=1'-0" | 1

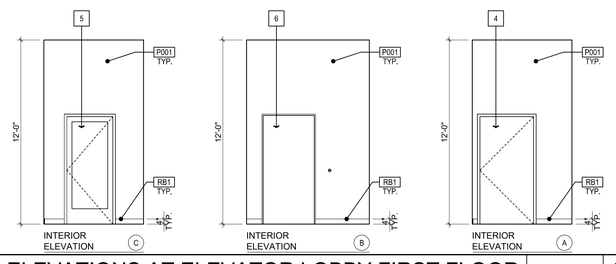

INTERIOR ELEVATIONS AT ELEVATOR LOBBY FIRST FLOOR | SCALE: 1/4"=1'-0" | 3

ktgy

17911 Von Karman Ave.
Suite 200
Irvine, CA 92614
ktgy.com
949.851.2133

ktgy Project Number 20250428
Contact DORINA WATSON
Email dwatson@ktgy.com
Senior Director DAVID SCHMITZ
Designer RUSSEL ROSALES

Developer
SEDC
23906 SOBOBA ROAD
SAN JACINTO, CA 92581

PHONE: (951) 663-2058

SOBOBA SOVOVATUM VILLAGE PHASE-2

SAN JACINTO, CA

No.	DATE	DESCRIPTION

Client is responsible for notifying architect in writing for any discovered errors or omissions in the plans and specifications during construction of the project. Failure for Client to notify Architect of any known errors or omissions in the plans or specifications, and proceeding with constructing the portion of work shown in the plans or specifications containing known errors or omissions shall be a waiver by Client for any liability of Architect for such known errors or omissions. Client releases Architect for any liability for such portions of work, and Architect shall not be liable for any delay damages, change orders, repair costs, removal or demolition costs, or replacement of any such portions of work.

2026-05-26, ISSUED FOR BID

INTERIOR ELEVATIONS

A6-11

Plotted: 1/7/2026 4:29:08 PM

COPYRIGHT 2024 KTGY GROUP INC. These plans and specifications are protected by United States copyright law and may not be used, reproduced, distributed, transmitted, displayed, or modified in any way without the prior written consent of KTGY Group, Inc. or the authorized copyright holder or licensee.

SET #1

1 ea CYL	3902	US26D	HA
Remainder of hardware by door manufacturer			

SET #2

3 ea Hinges	BB1168 4 1/2 X 4 1/2	US32D	HA
1 ea Push	33E 4"x16"	US32D	HA
1 ea Pull	H30S 8"x16"	US32D	HA
1 ea Closer	5200	ALM	HA
1 ea Kick Plate	190S 10"x2" LDW	US32D	HA
1 ea Mop Plate	190S 4"x1" LDW	US32D	HA
1 ea Wall Stop	232W/236W (as required)	US26D	HA
3 ea Door Silencers	307D	GREY	HA

SET #3

3 ea Hinges	BB1279 4 1/2 X 4 1/2	US26D	HA
1 ea Storeroom	3480 SECT WTN	US26D	HA
1 ea Closer	5100	ALM	HA
1 ea Kick Plate	190S 10"x2" LDW	US32D	HA
1 ea Set Seal	726S x LAR	MIL	HA

SET #4

3 ea Hinges	BB1191 NRP 4 1/2 X 4 1/2	US32D	HA
1 ea Exit Device	4501 RIM	US26D	HA
1 ea Trim	45NL WTN	US26D	HA
1 ea CYL	3902	US26D	HA
1 ea Closer	5100 HDCS	ALM	HA
1 ea Kick Plate	190S 10"x2" LDW	US32D	HA
1 ea Door Sweep	783S X LAR	MIL	HA
1 ea Threshold	413S X LAR	MIL	HA
1 ea Set Seal	891S X LAR	MIL	HA
1 ea Rain Drip	810S X LAR	MIL	HA

SET #5

3 ea Hinges	BB1191 NRP 4 1/2 X 4 1/2	US32D	HA
1 ea Storeroom Lock	3480 WTN	US26D	HA
1 ea Closer	5100	ALM	HA
1 ea Kick Plate	190S 10"x2" LDW	US32D	HA
1 ea Door Sweep	783S X LAR	MIL	HA
1 ea Threshold	413S X LAR	MIL	HA
1 ea Set Seal	891S X LAR	MIL	HA

SET #6

3 ea Hinges	BB1279 4 1/2 X 4 1/2	US26D	HA
1 ea Storeroom Lock	3480 WTN	US26D	HA
1 ea Closer	5100	ALM	HA
1 ea Wall Stop	232W/236W (as required)	US26D	HA
1 ea Eye Viewer	DS2000-ALS	ALM	SPI
1 ea Set Seal	726S X LAR	MIL	HA

SET #7

Hardware by manufacturer

SET #8

3 ea Hinges	BB1191 4 1/2 X 4 1/2	US32D	HA
1 ea Electronic Lock	34K2 WTN	US26D	HA
1 ea Prox Cards	2-679-0021	WHT	HA
1 ea Closer	5100 TRKNHOTA	ALM	HA
1 ea Wall Stop	232W/236W (as required)	US26D	HA
1 ea Eye Viewer	DS2000-ALS	ALM	SPI
1 ea Set Seal	891S	MIL	HA
1 ea Door Sweep	783S X LAR	MIL	HA
1 ea Threshold	413S X LAR	MIL	HA
1 ea Set Seal	891S X LAR	MIL	HA

SET #9

3 ea Hinges	BB1279 NRP 4 1/2 X 4 1/2	US26D	HA
1 ea Storeroom lock	3480 WTN	US26D	HA
1 ea Overhead Stop	6017	US32D	HA
1 ea Silencers	307D	GRY	HA

DOOR HARDWARE

SCALE: N.T.S. | 19

REVISION #	DOOR #	DOOR TYPE	DOOR WIDTH	DOOR HGT	DOOR THK	DOOR MAT	DOOR FINISH PUSH SIDE	DOOR FINISH PULL SIDE	DOOR GLASS	DOOR MANU-FACTURER	FRAME MAT	FRAME FINISH PUSH SIDE	FRAME FINISH PULL SIDE	DETAILS HEAD	DETAILS JAMB	DETAILS THRESH	HARDWARE SET	ASSY FIRE RATING (MIN)	REMARKS
1st FLOOR PLAN																			
	100	AA	(PAIR) 3'-0"	7'-0"	-	ALUM	MFR	MFR	GL-1	-	ALUM	MFR	MFR	5/AD-01	5/AD-01	4/A0-11	1	-	PANIC HARDWARE
	101	A	3'-0"	7'-0"	-	ALUM	MFR	MFR	GL-1	-	ALUM	MFR	MFR	5/AD-01	5/AD-01	4/A0-11	1	-	PANIC HARDWARE
	102	B	3'-0"	7'-0"	1-3/4"	HM	P	P	-	-	HM	P	P	11/AD-01	11/AD-01	4/A0-11	6	-	PANIC HARDWARE
	103	B	3'-0"	7'-0"	1-3/4"	HM	P	P	-	-	HM	P	P	11/AD-01	11/AD-01	4/A0-11	6	-	-
	104	B	3'-0"	7'-0"	1-3/4"	HM	P	P	-	-	HM	P	P	11/AD-01	11/AD-01	4/A0-11	2	-	-
	105	B	3'-0"	7'-0"	1-3/4"	HM	P	P	-	-	HM	P	P	11/AD-01	11/AD-01	4/A0-11	2	-	-
	106	B	3'-0"	7'-0"	1-3/4"	HM	P	P	-	-	HM	P	P	11/AD-01	11/AD-01	4/A0-11	2	-	-
	107	B	3'-0"	7'-0"	1-3/4"	HM	P	P	-	-	HM	P	P	9/AD-01	9/AD-01	4/A0-11	3	-	-
	108	B	3'-0"	7'-0"	1-3/4"	HM	P	P	-	-	HM	P	P	9/AD-01	9/AD-01	4/A0-11	3	-	-
	109	A	3'-0"	7'-0"	-	ALUM	MFR	MFR	GL-1	-	ALUM	MFR	MFR	5/AD-01	5/AD-01	4/A0-11	1	-	VISION GLAZING W/ PANIC HARDWARE
	110	B	3'-0"	7'-0"	1-3/4"	HM	P	P	-	-	HM	P	P	11/AD-01	11/AD-01	4/A0-11	9	-	-
2nd FLOOR PLAN																			
	200	A	3'-0"	7'-0"	-	ALUM	MFR	MFR	GL-1	-	ALUM	MFR	MFR	5/AD-01	5/AD-01	4/A0-11	1	-	VISION GLAZING W/ PANIC HARDWARE
	201	C	3'-0"	7'-0"	-	ALUM	MFR	MFR	GL-1	-	ALUM	MFR	MFR	11/AD-01	11/AD-01	4/A0-11	1	-	-
	202	C	3'-0"	7'-0"	-	ALUM	MFR	MFR	GL-1	-	ALUM	MFR	MFR	11/AD-01	11/AD-01	4/A0-11	1	-	-
	203	C	3'-0"	7'-0"	-	ALUM	MFR	MFR	GL-1	-	ALUM	MFR	MFR	11/AD-01	11/AD-01	4/A0-11	1	-	-
	204	C	3'-0"	7'-0"	-	ALUM	MFR	MFR	GL-1	-	ALUM	MFR	MFR	11/AD-01	11/AD-01	4/A0-11	1	-	-
	205	C	3'-0"	7'-0"	-	ALUM	MFR	MFR	GL-1	-	ALUM	MFR	MFR	11/AD-01	11/AD-01	4/A0-11	1	-	-
	206	C	3'-0"	7'-0"	-	ALUM	MFR	MFR	GL-1	-	ALUM	MFR	MFR	11/AD-01	11/AD-01	4/A0-11	1	-	-
	207	B	3'-0"	7'-0"	1-3/4"	HM	P	P	-	-	HM	P	P	11/AD-01	11/AD-01	4/A0-11	2	-	-
	208	B	3'-0"	7'-0"	1-3/4"	HM	P	P	-	-	HM	P	P	11/AD-01	11/AD-01	4/A0-11	2	-	-
	209	B	3'-0"	7'-0"	1-3/4"	HM	P	P	-	-	HM	P	P	11/AD-01	11/AD-01	4/A0-11	2	-	-

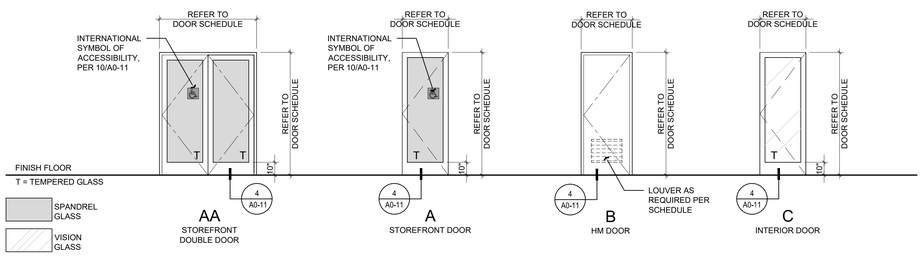

DOOR TYPES

SCALE: N.T.S. | 7

GLASS ASSEMBLY SCHEDULE

#	PANE 1	PANE 2	SPACE	U VALUE	SHADING COEFICIENT
GL-1	1/4" CLEAR	1/4" LOWe (PPG SOLARBAN 70XL)	1/2"	0.41	0.26

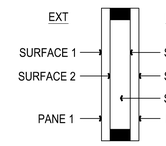

CLEAR GLASS

T TEMPERED GLASS

GENERAL NOTES

1. VERIFY ALL ROUGH OPENINGS (R.O.) IN FIELD PRIOR TO WINDOW AND WINDOW WALL ORDER AND FABRICATION. R.O. DIMENSIONS SHOWN INCLUDE SHIM SPACE. REFER TO OPENING DETAILS FOR SHIM SPACE CONFIGURATION AND REQUIREMENTS.
2. PROVIDE DUAL PANE INSULATING GLASS AT ALL EXTERIOR WINDOW WALLS AND WINDOWS.
3. PROVIDE SAFETY GLAZING REQUIRED BY GOVERNING AGENCY.
4. PROVIDE GLASS THICKNESS REQUIRED BY GOVERNING AGENCY.
5. PROVIDE OPENING FLASHING PER DETAIL. (13 / AD-01)
6. FOR DOOR SCHEDULE REFER TO DRAWING; (7 / A7-11)
7. FOR CODE COMPLIANCE INFORMATION REFER TO DRAWING; (5 / A0-21)
8. FOR GREEN CODE MANDATORY MEASURES REFER TO DRAWING; (- / A0-31)
9. FOR ACCESSIBILITY REQUIREMENTS SEE DRAWINGS. (- / A0-11)
10. REFER TO FLOOR PLAN FOR WALL TYPE REFERENCES. FOR WALL TYPE ASSEMBLIES REFER TO SHEET; (1 / AD-01)

WINDOW NOTES

1. VERIFY ALL ROUGH OPENINGS (R.O.) IN FIELD PRIOR TO WINDOW AND WINDOW WALL ORDER AND FABRICATION. R.O. DIMENSIONS SHOWN INCLUDE SHIM SPACE. REFER TO OPENING DETAILS FOR SHIM SPACE CONFIGURATION AND REQUIREMENTS.
2. PROVIDE DUAL PANE INSULATING GLASS AT ALL EXTERIOR WINDOW WALLS AND WINDOWS.
3. PROVIDE SAFETY GLAZING REQUIRED BY GOVERNING AGENCY.
4. PROVIDE GLASS THICKNESS REQUIRED BY GOVERNING AGENCY.
5. PROVIDE OPENING FLASHING PER DETAIL. (13 / AD-01)

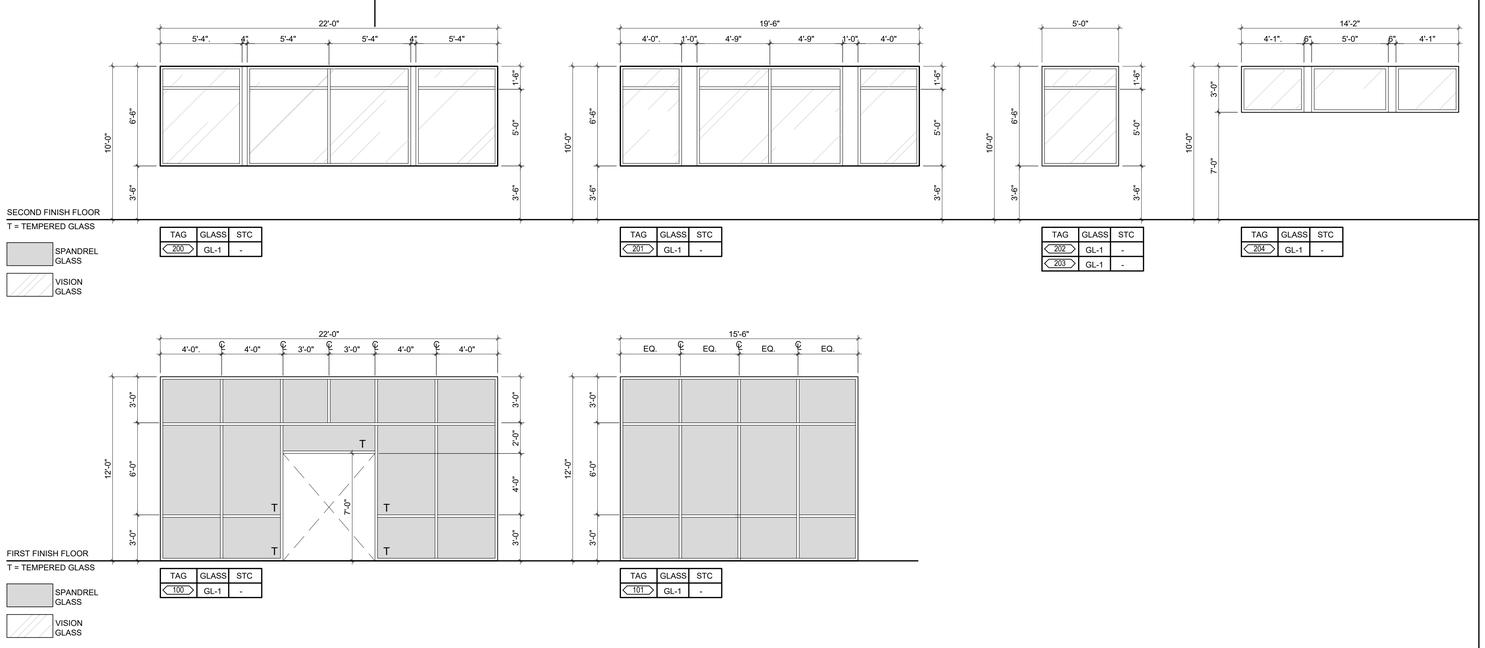

STOREFRONT AND GLAZING ELEVATIONS

SCALE: 1/4"=1'-0" | 6

ktgy

17911 Von Karman Ave.
Suite 200
Irvine, CA 92614
ktgy.com
949.851.2133

ktgy Project Number 20250428
Contact DORINA WATSON
Email dwatson@ktgy.com
Senior Director DAVID SCHMITZ
Designer RUSSEL ROSALES

Developer
SEDC
23906 SOBOBA ROAD
SAN JACINTO, CA 92581

PHONE: (951) 663-2058

SOBOBA SOVOVATUM VILLAGE PHASE-2

SAN JACINTO, CA

No.	DATE	DESCRIPTION

Client is responsible for notifying architect in writing for any discovered errors or omissions in the plans and specifications during construction of the project. Failure for Client to notify Architect of any known errors or omissions in the plans or specifications, and proceeding with constructing the portion of work shown in the plans or specifications containing known errors or omissions shall be a waiver by Client for any liability of Architect for such known errors or omissions. Client releases Architect for any liability for such portions of work, and Architect shall not be liable for any delay damages, change orders, repair costs, removal or demolition costs, or replacement of any such portions of work.

2026-05-26, ISSUED FOR BID

DOOR & STOREFRONT SCHEDULES

A7-11

Printed: 1/7/2026 4:29:06 PM

COPYRIGHT 2024 KTGY GROUP INC. These plans and specifications are protected by United States copyright law and may not be used, reproduced, distributed, transmitted, displayed, or modified in any way without the prior written consent of KTGY Group, Inc. or the authorized copyright holder or licensee.

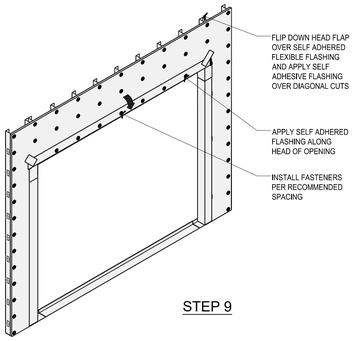

STEP 9

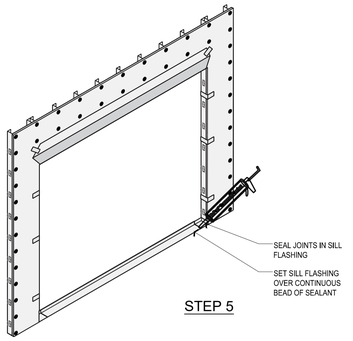

STEP 5

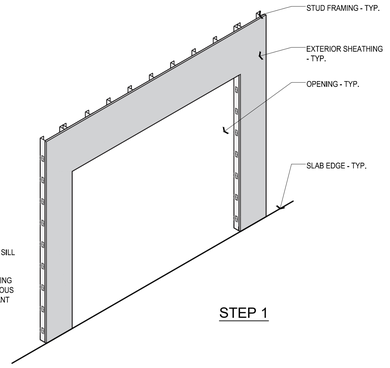

STEP 1

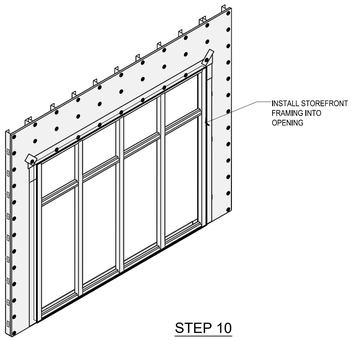

STEP 10

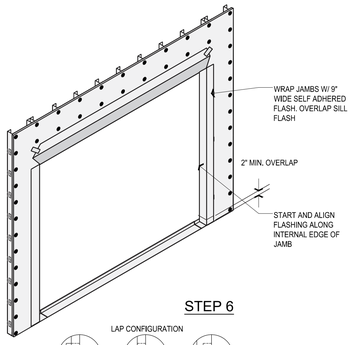

STEP 6

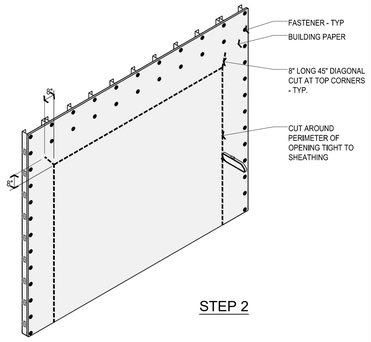

STEP 2

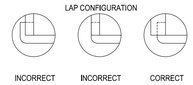

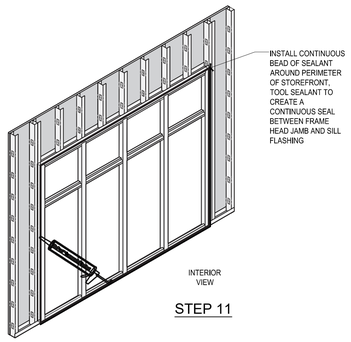

STEP 11

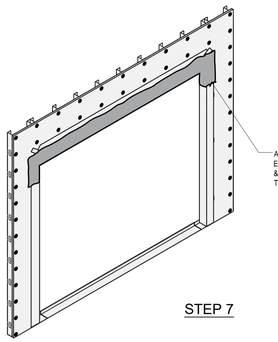

STEP 7

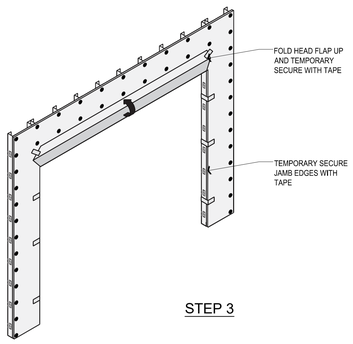

STEP 3

STEP12

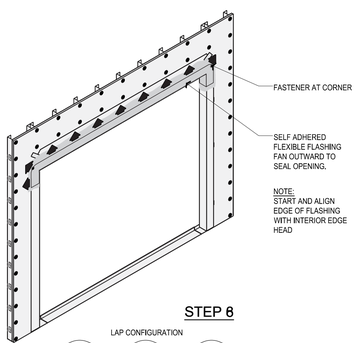

STEP 6

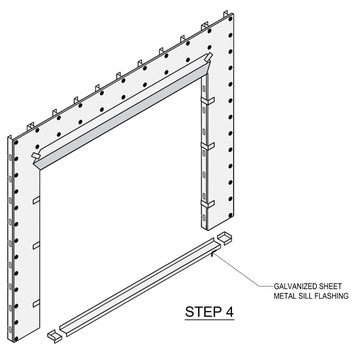

STEP 4

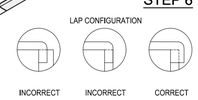

DETAIL TITLE — DETAIL DESCRIPTION | SCALE 1'-0"=1'-0" | 13
943.1.04

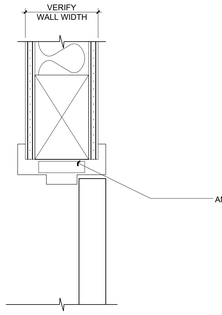

HEAD

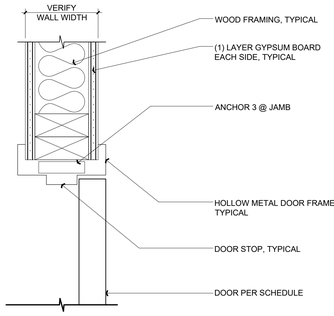

JAMB

INTERIOR HOLLOW METAL FRAME DOOR — SCALE 3"=1'-0" | 11
958.2.01

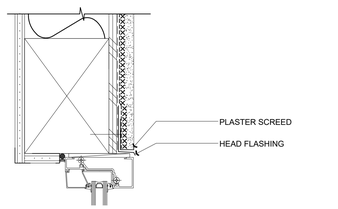

HEAD

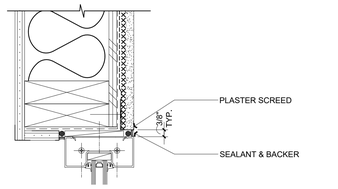

JAMB

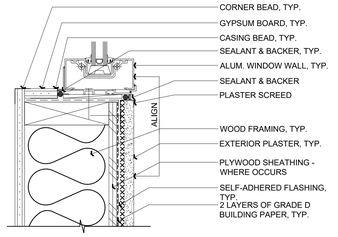

SILL

WINDOW WALL @ PLASTER — SCALE 3"=1'-0" | 7
947.1.06

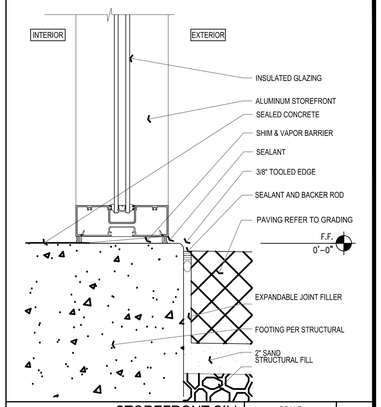

STOREFRONT SILL — SCALE 3"=1'-0" | 4

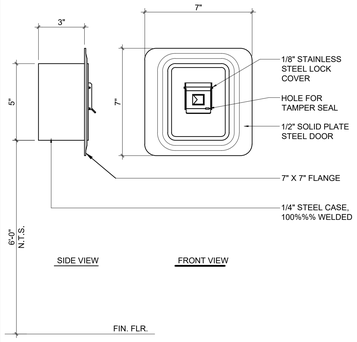

NOTE: KEYS PLACED IN THE KNOX-BOX SHALL BE IDENTIFIED WITH A TAG OR LABEL.

KNOX-BOX RECESSED MOUNTED — SCALE 3"=1'-0" | 3

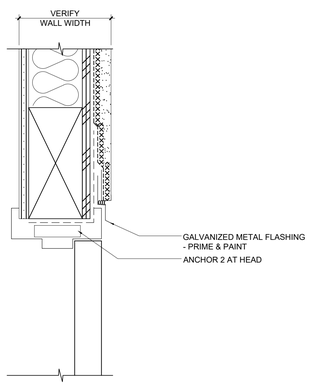

HEAD

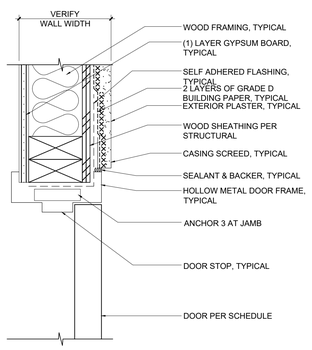

JAMB

HM HEAD/JAMB AT PLASTER — SCALE 3"=1'-0" | 9
944.1.01

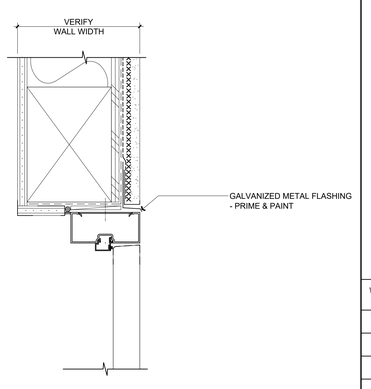

HEAD

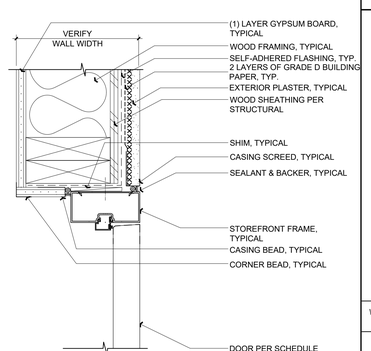

JAMB

EXT. STOREFRONT DOOR — SCALE 3"=1'-0" | 5
947.3.01

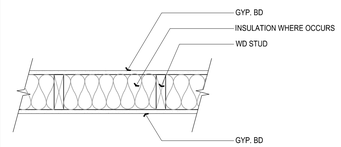

WALL TYPE NUMBER	STUD SIZE	STUD GA	STUD SPACING	INSUL.	NO. LAYER	GYP. BD. SIZE	GYP. BD. TYP.	FIRE RATING	U.L. LIST
2	2x6	-	16" O.C.	-	1	5/8"	-	-	-
2A	2x4	-	16" O.C.	-	1	5/8"	-	-	-

WALL TYPE - 2 — SCALE NTS | 2

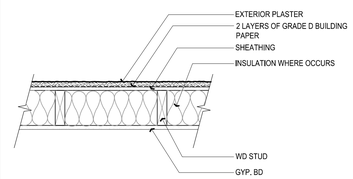

WALL TYPE NUMBER	STUD SIZE	STUD GA	STUD SPACING	INSUL.	NO. LAYER	GYP. BD. SIZE	GYP. BD. TYP.	FIRE RATING	U.L. LIST
1	2x6	-	16" O.C.	-	1	5/8"	-	-	-
1A	2x6	-	16" O.C.	1" EXT.	1	5/8"	-	-	-

WALL TYPE - 1 — SCALE NTS | 1

ktgy

17911 Von Karman Ave.
Suite 200
Irvine, CA 92614
ktgy.com
949.851.2133

ktgy Project Number	20250428
Contact	DORINA WATSON
Email	dwatson@ktgy.com
Senior Director	DAVID SCHMITZ
Designer	RUSSEL ROSALES

Developer
SEDC
23906 SOBOBA ROAD
SAN JACINTO, CA 92581

PHONE: (951) 663-2058

SOBOBA SOVOVATUM VILLAGE PHASE-2

SAN JACINTO, CA

No.	DATE	DESCRIPTION

Client is responsible for notifying architect in writing for any discovered errors or omissions in the plans and specifications during construction of the project. Failure for Client to notify Architect of any known errors or omissions in the plans or specifications, and proceeding with constructing the portion of work shown in the plans or specifications containing known errors or omissions shall be a waiver by Client for any liability of Architect for such known errors or omissions. Client releases Architect for any liability for such portions of work, and Architect shall not be liable for any delay damages, change orders, repair costs, removal or demolition costs, or replacement of any such portions of work.

2026-05-26, ISSUED FOR BID

PROJECT DETAILS

AD-01

Printed: 1/7/2026 4:29:06 PM

COPYRIGHT 2024 KTGY GROUP INC. These plans and specifications are protected by United States copyright law and may not be used, reproduced, distributed, transmitted, displayed, or modified in any way without the prior written consent of KTGY Group, Inc. or the authorized copyright holder or licensee.

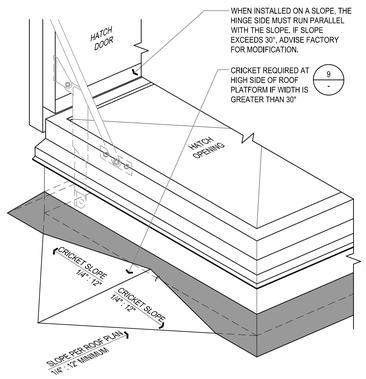

ROOF HATCH | SCALE 1"=1'-0" | 20

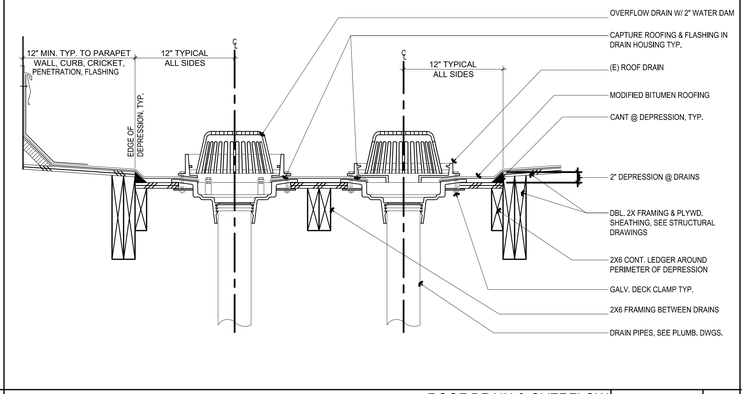

ROOF DRAIN & OVERFLOW | SCALE 1-1/2"=1'-0" | 12

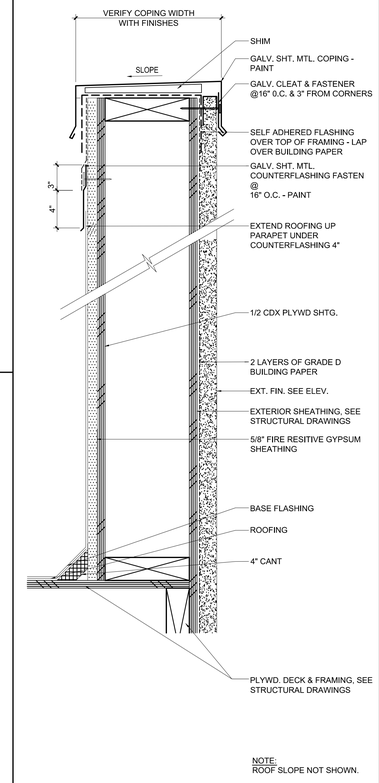

NOTE:
ROOF SLOPE NOT SHOWN.

WOOD PARAPET WALL | SCALE 3"=1'-0" | 3

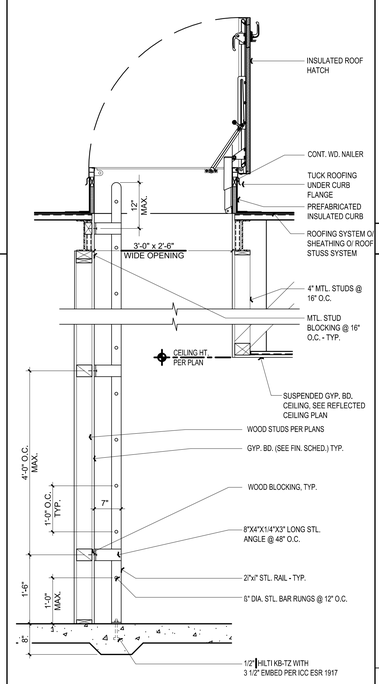

SECTION

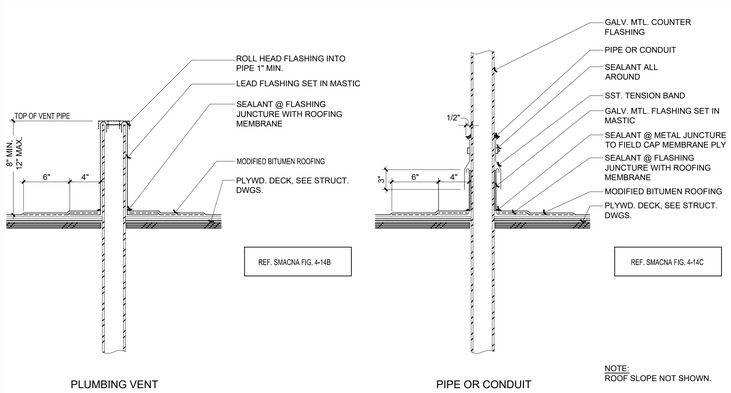

NOTE:
ROOF SLOPE NOT SHOWN.

PIPE PENETRATIONS LARGER THAN 2" Ø | SCALE 1-1/2"=1'-0" | 11

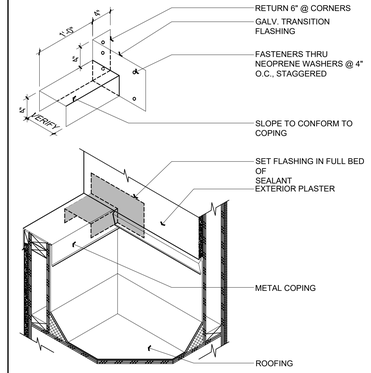

ROOF FLASHING | SCALE 1"=1'-0" | 2

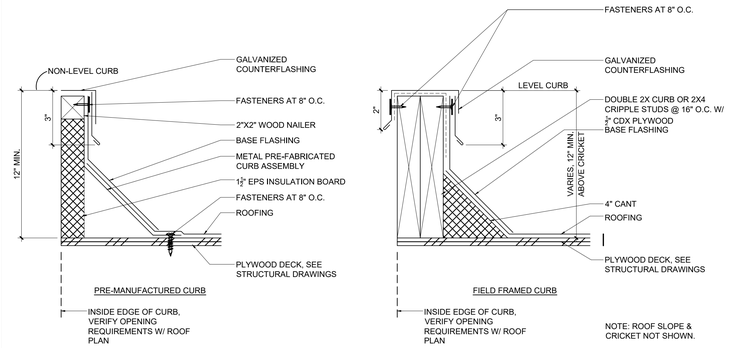

NOTE: ROOF SLOPE & CRICKET NOT SHOWN.

FLASHING AT TYPICAL CURB | SCALE 3"=1'-0" | 10

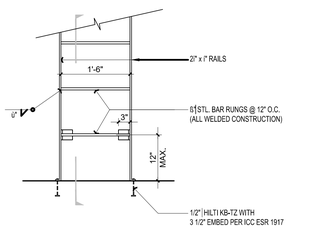

PARTIAL ELEVATION

NOTE:
INSTALL SAFTEY POST EXTENSION AS PROVIDED BY MANUFACTURER

ROOF HATCH AND LADDER | SCALE 3/4"=1'-0" | 17

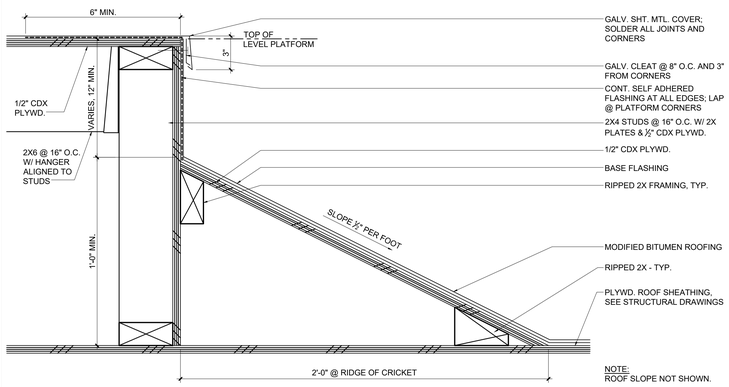

NOTE:
ROOF SLOPE NOT SHOWN.

TYPICAL CRICKET @ PLATFORM OR CURB | SCALE 3"=1'-0" | 9

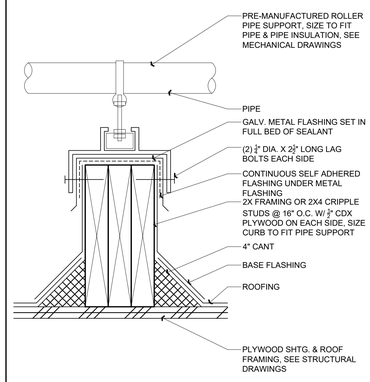

PIPE SUPPORT | SCALE 3"=1'-0" | 5

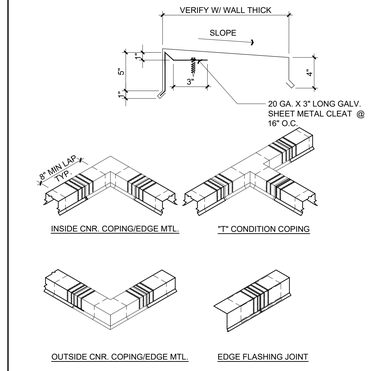

NOTE: SET ALL LAPS IN FULL SEALANT BED

COPING /EDGE METAL JOINTS | SCALE 1-1/2"=1'-0" | 1

ktgy

17911 Von Karman Ave.
Suite 200
Irvine, CA 92614
ktgy.com
949.851.2133

ktgy Project Number 20250428
Contact DORINA WATSON
Email dwatson@ktgy.com
Senior Director DAVID SCHMITZ
Designer RUSSEL ROSALES

Developer
SEDC
23906 SOBOBA ROAD
SAN JACINTO, CA 92581

PHONE: (951) 663-2058

SOBOBA SOVOVATUM VILLAGE PHASE-2

SAN JACINTO, CA

No.	DATE	DESCRIPTION

Client is responsible for notifying architect in writing for any discovered errors or omissions in the plans and specifications during construction of the project. Failure for Client to notify Architect of any known errors or omissions in the plans or specifications, and proceeding with constructing the portion of work shown in the plans or specifications containing known errors or omissions shall be a waiver by Client for any liability of Architect for such known errors or omissions. Client releases Architect for any liability for such portions of work, and Architect shall not be liable for any delay damages, change orders, repair costs, removal or demolition costs, or replacement of any such portions of work.

2026-05-26, ISSUED FOR BID

PROJECT DETAILS

AD-02

Printed: 1/7/2026 4:29:00 PM

COPYRIGHT 2024 KTGY GROUP INC. These plans and specifications are protected by United States copyright law and may not be used, reproduced, distributed, transmitted, displayed, or modified in any way without the prior written consent of KTGY Group, Inc. or the authorized copyright holder or licensee.

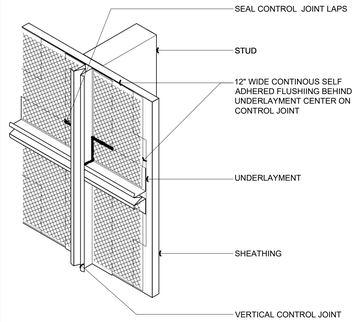

REVEAL/CONTROL JOINT INTERSECTION — SCALE 3"=1'-0" — 8
941.2.04

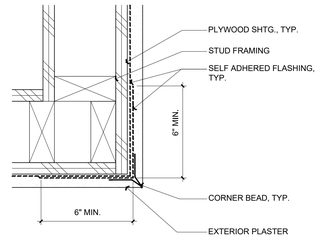

CORNER DETAIL — SCALE 3"=1'-0" — 4

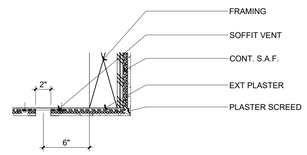

SOFFIT VENT — SCALE 1-1/2"=1'-0" — 7

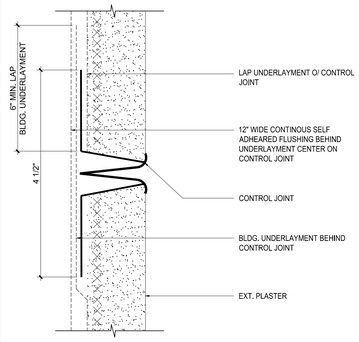

TYPICAL PLASTER CONTROL JOINT — SCALE 6"=1'-0" — 3
941.2.01

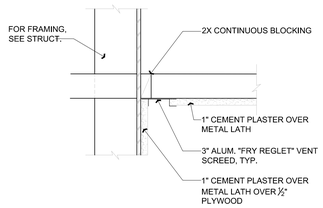

VENT SCREED DETAIL — SCALE 1-1/2"=1'-0" — 6

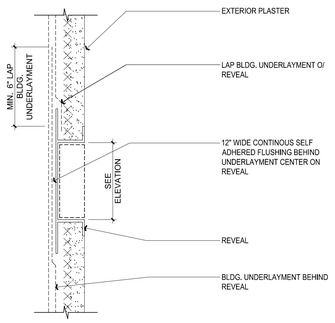

TYPICAL REVEAL — SCALE 6"=1'-0" — 2
941.3.01

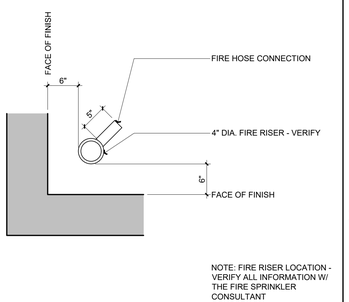

FIRE RISER PIPE — SCALE 1"=1'-0" — 9
963.2.03

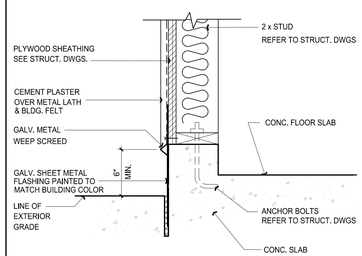

SILL @ STUD WALL — SCALE 1-1/2"=1'-0" — 5

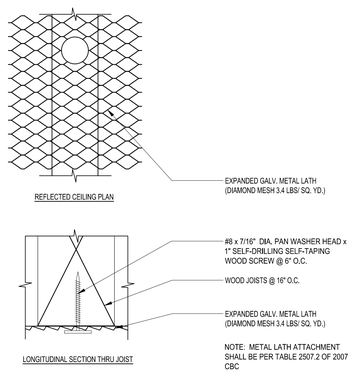

NOTE: METAL LATH ATTACHMENT SHALL BE PER TABLE 2507.2 OF 2007 CBC

METAL LATH ATTACHMENT @ WOOD STUDS — SCALE NTS — 1

ktgy

17911 Von Karman Ave.
Suite 200
Irvine, CA 92614
ktgy.com
949.851.2133

ktgy Project Number	20250428
Contact	DORINA WATSON
Email	dwatson@ktgy.com
Senior Director	DAVID SCHMITZ
Designer	RUSSEL ROSALES

Developer
SEDC
23906 SOBOBA ROAD
SAN JACINTO, CA 92581

PHONE: (951) 663-2058

SOBOBA SOVOVATUM VILLAGE PHASE-2

SAN JACINTO, CA

No.	DATE	DESCRIPTION

Client is responsible for notifying architect in writing for any discovered errors or omissions in the plans and specifications during construction of the project. Failure for Client to notify Architect of any known errors or omissions in the plans or specifications, and proceeding with constructing the portion of work shown in the plans or specifications containing known errors or omissions shall be a waiver by Client for any liability of Architect for such known errors or omissions. Client releases Architect for any liability for such portions of work, and Architect shall not be liable for any delay damages, change orders, repair costs, removal or demolition costs, or replacement of any such portions of work.

PROJECT DETAILS

2026-05-26, ISSUED FOR BID

AD-03

Plotted: 1/7/2026 4:29:06 PM

COPYRIGHT 2024 KTGY GROUP INC. These plans and specifications are protected by United States copyright law and may not be used, reproduced, distributed, transmitted, displayed, or modified in any way without the prior written consent of KTGY Group, Inc. or the authorized copyright holder or licensee.

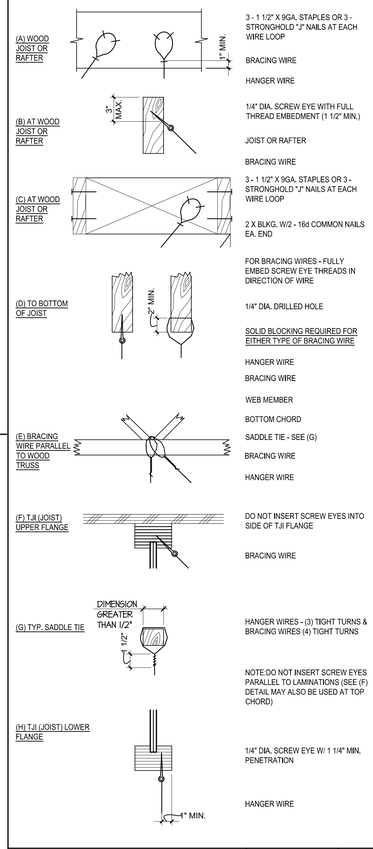

WIRE CONNECTIONS | SCALE NTS | 7

957.1.01

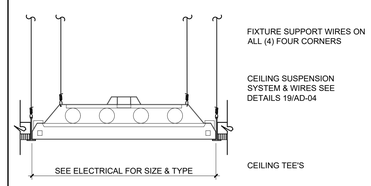

FIXTURE SUPPORT | SCALE 1-1/2"=1'-0" | 4

ICC-ESR-3336

NOTE: ALL COMPONENTS OF CEILING GRID TO BE CLASSIFIED 'HEAVY DUTY' BY CERTAINTEED CEILINGS CORPORATION

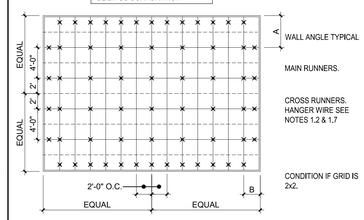

A = 47 1/2" OR LESS TO ACCOMMODATE STANDARD GRID & CEILING BOARD.

B = 24" OR LESS TO ACCOMMODATE STANDARD CEILING BOARD.

TYPICAL SUPPORT PLAN | SCALE 1'-0"=1'-0" | 3

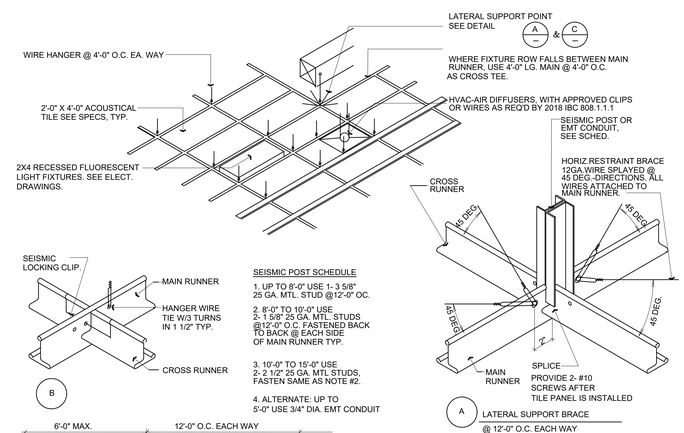

SEISMIC POST SCHEDULE

1. UP TO 8'-0" USE 1- 3 5/8" 25 GA. MTL. STUD @12'-0" OC.

2. 8'-0" TO 10'-0" USE 2- 1 5/8" 25 GA. MTL. STUDS @12'-0" O.C. FASTENED BACK TO BACK @ EACH SIDE OF MAIN RUNNER TYP.

3. 10'-0" TO 15'-0" USE 2- 2 1/2" 25 GA. MTL STUDS, FASTEN SAME AS NOTE #2.

4. ALTERNATE: UP TO 5'-0" USE 3/4" DIA. EMT CONDUIT

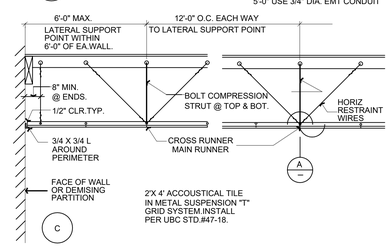

CEILING NOTES

1. ALL HANGER WIRE SHALL BE #12 GALV. WIRE OR CODE-APPROVED EQUAL

2. ALL HANGERS AND RUNNERS SHALL BE ACCURATELY LEVELED AND BE SPACED IN ACCORDANCE WITH MANUF. SPECS.

3. ALL INTERSECTIONS AND CONNECTION ACCESSORIES THROUGHOUT SHALL BE CAPABLE OF WITHSTANDING DESIGN LOADS REQUIRED BY 2018 IBC 808.1.1.1.

4. AT LIGHT FIXTURES PROVIDE #12 GALV. WIRE AT DIAGONAL OPPOSED

5. SEE ELECTRICAL DRAWINGS AND REFLECTED CEILING PLANS FOR LOCATIONS AND DIRECTIONS OF LIGHT FIXTURES (DESIGN BUILD)

ICC-ESR-3336

CEILING DETAIL | SCALE 1/4"=1'-0" | 1

ktgy

17911 Von Karman Ave.
Suite 200
Irvine, CA 92614
ktgy.com
949.851.2133

ktgy Project Number	20250428
Contact	DORINA WATSON
Email	dwatson@ktgy.com
Senior Director	DAVID SCHMITZ
Designer	RUSSEL ROSALES

Developer

SEDC
23906 SOBOBA ROAD
SAN JACINTO, CA 92581

PHONE: (951) 663-2058

SOBOBA SOVOVATUM VILLAGE PHASE-2

SAN JACINTO, CA

No.	DATE	DESCRIPTION

Client is responsible for notifying architect in writing for any discovered errors or omissions in the plans and specifications during construction of the project. Failure for Client to notify Architect of any known errors or omissions in the plans or specifications, and proceeding with constructing the portion of work shown in the plans or specifications containing known errors or omissions shall be a waiver by Client for any liability of Architect for such known errors or omissions. Client releases Architect for any liability for such portions of work, and Architect shall not be liable for any delay damages, change orders, repair costs, removal or demolition costs, or replacement of any such portions of work.

2026-05-26, ISSUED FOR BID

PROJECT DETAILS

AD-04

Plotted: 1/7/2026 4:29:06 PM

COPYRIGHT 2024 KTGY GROUP INC. These plans and specifications are protected by United States copyright law and may not be used, reproduced, distributed, transmitted, displayed, or modified in any way without the prior written consent of KTGY Group, Inc. or the authorized copyright holder or licensee.

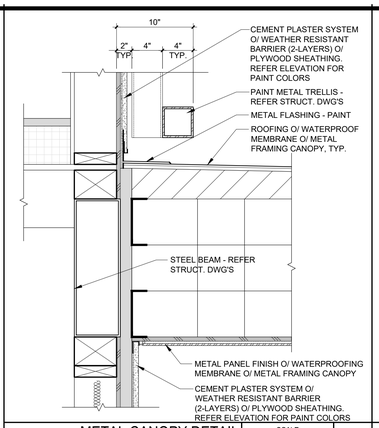

METAL CANOPY DETAIL | SCALE 1-1/2"=1'-0" | 12

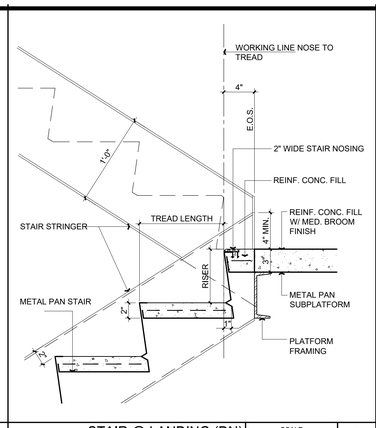

STAIR @ LANDING (DN) | SCALE 1-1/2"=1'-0" | 8

9512.3.04

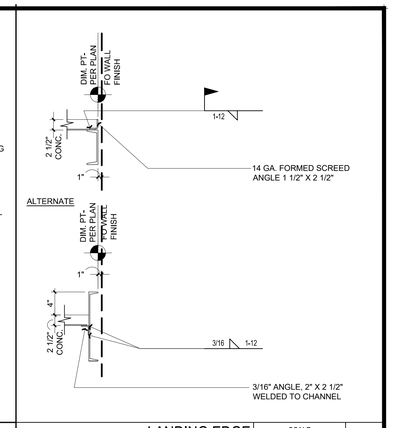

LANDING EDGE | SCALE 3/4"=1'-0" | 4

9512.3.03

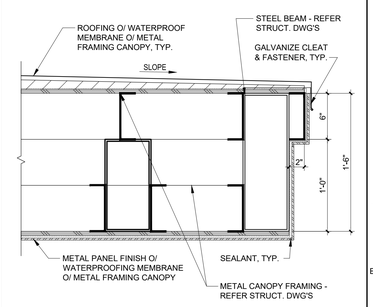

METAL CANOPY DETAIL | SCALE 1-1/2"=1'-0" | 11

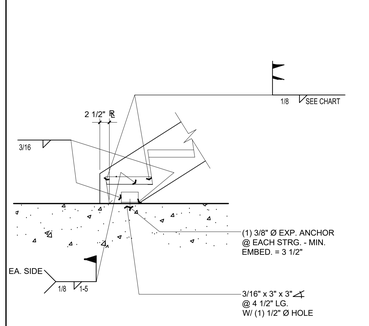

STARTER CONN. | SCALE 1"=1'-0" | 7

9512.3.01

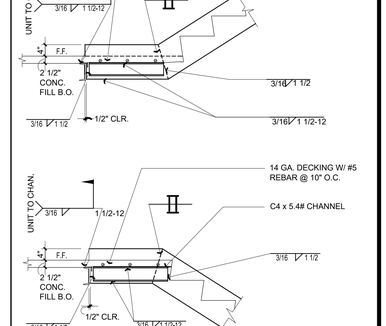

METAL PAN TREAD | SCALE 3/4"=1'-0" | 3

9512.3.08

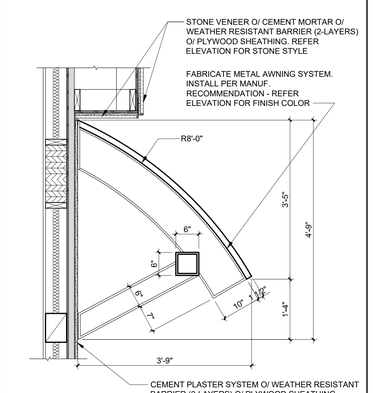

METAL AWNING DETAIL | SCALE 3/4"=1'-0" | 10

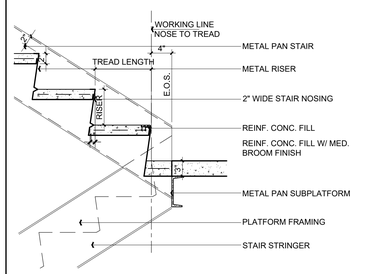

STAIR @ LANDING (UP) | SCALE 1"=1'-0" | 6

9512.3.05

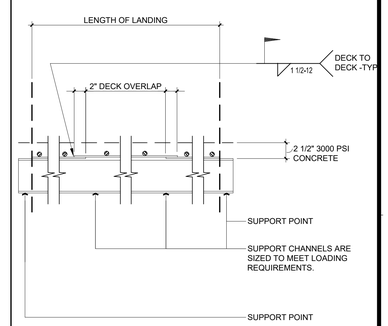

LANDING LEVEL | SCALE 3/4"=1'-0" | 2

9512.3.10

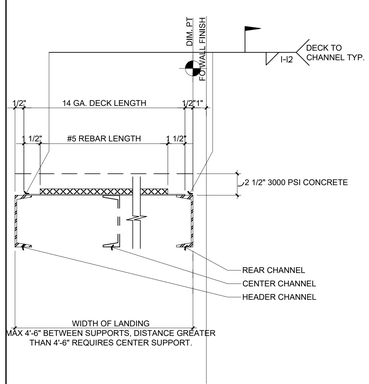

LANDING SUPPORT | SCALE 3/4"=1'-0" | 5

9512.3.11

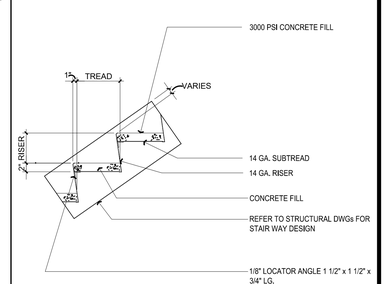

METAL PAN | SCALE 3/8"=1'-0" | 1

9512.3.02

ktgy

17911 Von Karman Ave.
Suite 200
Irvine, CA 92614
ktgy.com
949.851.2133

ktgy Project Number	20250428
Contact	DORINA WATSON
Email	dwatson@ktgy.com
Senior Director	DAVID SCHMITZ
Designer	RUSSEL ROSALES

Developer
SEDC
23906 SOBOBA ROAD
SAN JACINTO, CA 92581

PHONE: (951) 663-2058

SOBOBA SOVOVATUM VILLAGE PHASE-2

SAN JACINTO, CA

No.	DATE	DESCRIPTION

Client is responsible for notifying architect in writing for any discovered errors or omissions in the plans and specifications during construction of the project. Failure for Client to notify Architect of any known errors or omissions in the plans or specifications, and proceeding with constructing the portion of work shown in the plans or specifications containing known errors or omissions shall be a waiver by Client for any liability of Architect for such known errors or omissions. Client releases Architect for any liability for such portions of work, and Architect shall not be liable for any delay damages, change orders, repair costs, removal or demolition costs, or replacement of any such portions of work.

2026-05-26, ISSUED FOR BID

STAIR DETAILS

AD-05

Plotted: 1/7/2026 4:29:06 PM

COPYRIGHT 2024 KTGY GROUP INC. These plans and specifications are protected by United States copyright law and may not be used, reproduced, distributed, transmitted, displayed, or modified in any way without the prior written consent of KTGY Group, Inc. or the authorized copyright holder or licensee.

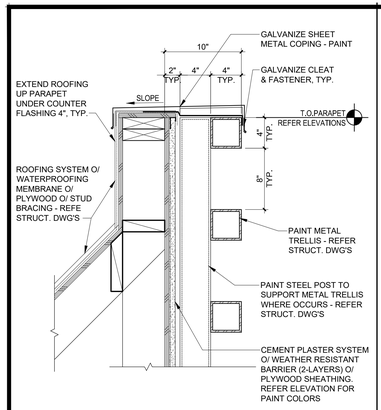

PARAPET DETAIL — SCALE 1-1/2"=1'-0" — 24

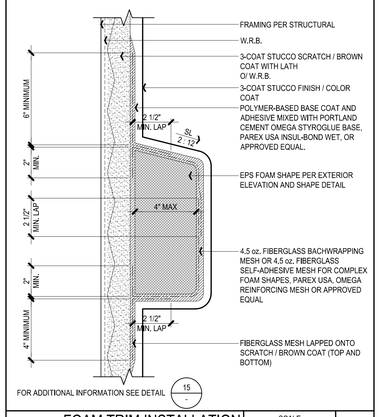

FOAM TRIM INSTALLATION — SCALE 3"=1'-0" — 16

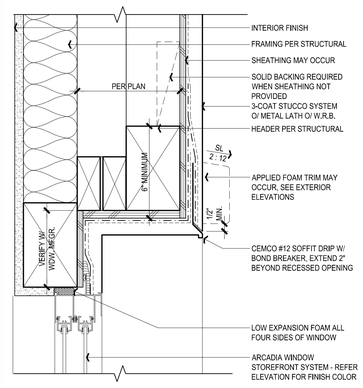

HEAD

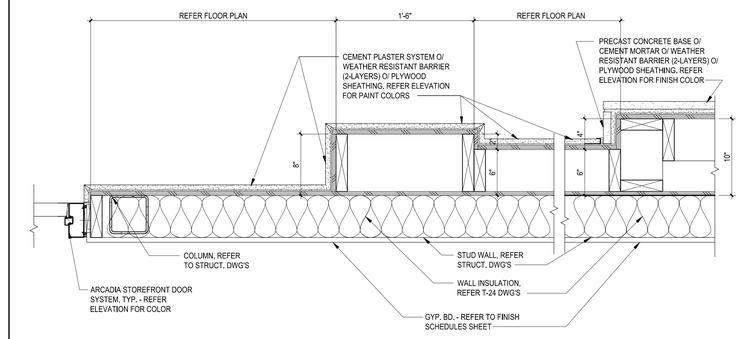

PILASTER DETAIL — SCALE 1-1/2"=1'-0" — 4

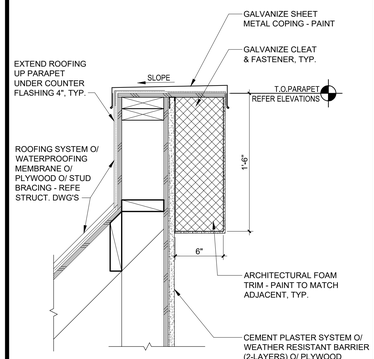

PARAPET DETAIL — SCALE 1-1/2"=1'-0" — 23

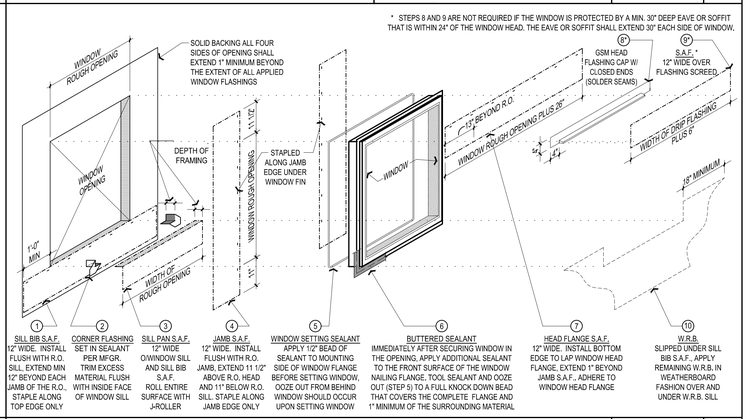

WINDOW FLASHING — SCALE 3"=1'-0" — 15

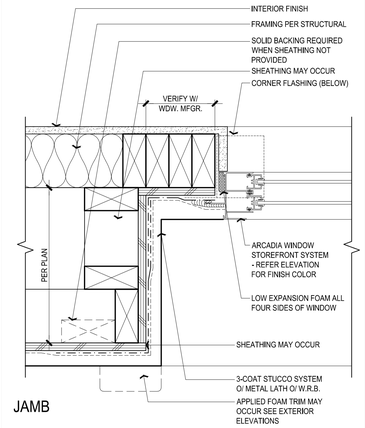

JAMB

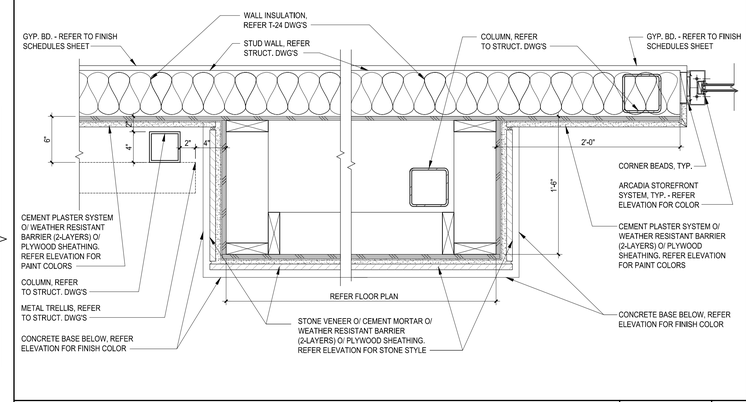

PILASTER DETAIL — SCALE 1-1/2"=1'-0" — 3

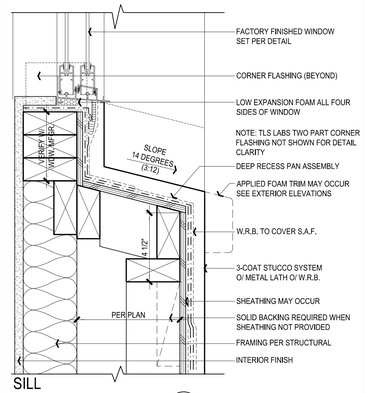

SILL

RECESSED WINDOW (>6" TO 24") — SCALE 3"=1'-0" — 10

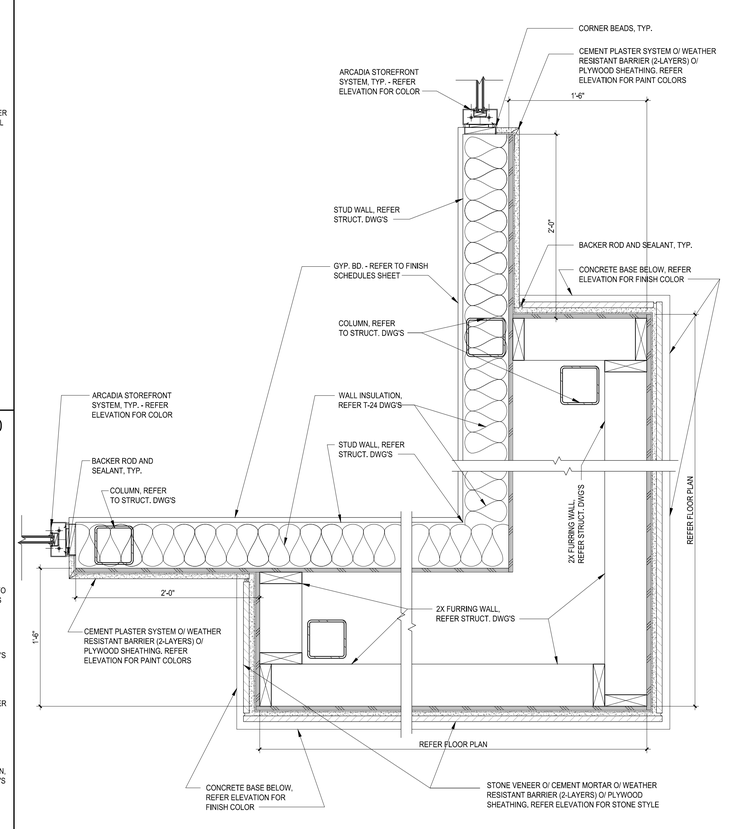

PILASTER DETAIL — SCALE 1-1/2"=1'-0" — 1

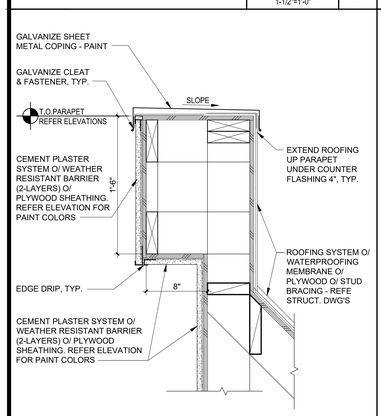

PARAPET DETAIL — SCALE 1-1/2"=1'-0" — 22

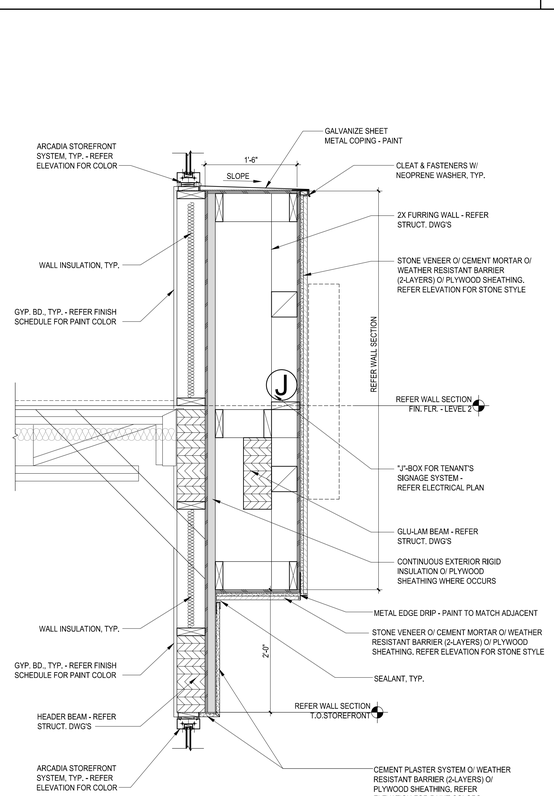

PILASTER DETAIL — SCALE 1"=1'-0" — 13

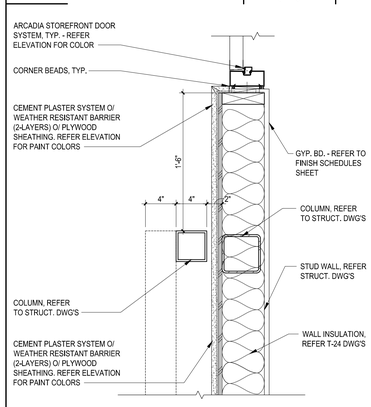

METAL TRELLIS DETAIL — SCALE 1-1/2"=1'-0" — 9

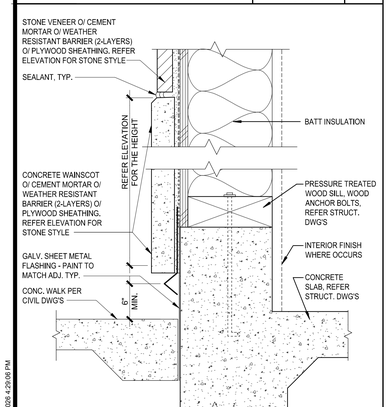

CONCRETE WAINSCOT DETAIL — SCALE 3"=1'-0" — 21

COPYRIGHT 2024 KTGY GROUP INC. These plans and specifications are protected by United States copyright law and may not be used, reproduced, distributed, transmitted, displayed, or modified in any way without the prior written consent of KTGY Group, Inc. or the authorized copyright holder or licensee.

Printed: 1/7/2026 4:29:00 PM

ktgy
17911 Von Karman Ave.
Suite 200
Irvine, CA 92614
ktgy.com
949.851.2133

ktgy Project Number	20250428
Contact	DORINA WATSON
Email	dwatson@ktgy.com
Senior Director	DAVID SCHMITZ
Designer	RUSSEL ROSALES

Developer
SEDC
23906 SOBOBA ROAD
SAN JACINTO, CA 92581

PHONE: (951) 663-2058

SOBOBA SOVOVATUM VILLAGE PHASE-2

SAN JACINTO, CA

No.	DATE	DESCRIPTION

Client is responsible for notifying architect in writing for any discovered errors or omissions in the plans and specifications during construction of the project. Failure for Client to notify Architect of any known errors or omissions in the plans or specifications, and proceeding with constructing the portion of work shown in the plans or specifications containing known errors or omissions shall be a waiver by Client for any liability of Architect for such known errors or omissions. Client releases Architect for any liability for such portions of work, and Architect shall not be liable for any delay damages, change orders, repair costs, removal or demolition costs, or replacement of any such portions of work.

2026-05-26, ISSUED FOR BID

PROJECT DETAILS

AD-06

GENERAL NOTES

STRUCTURAL WOOD (SECTION 1705.12.2)
FIELD GLUING
NAILING, BOLTING, ANCHORING AND FASTENING
DRAG STRUTS
BRACES
HOLD–DOWNS
SHEAR WALLS AND DIAPHRAGM NAILING, ANCHORING, BOLTING, ANCHORING AND FASTENING
COLD FORMED STEEL FRAMING (SECTION 1705A.12.3)
STRUCTURAL RACKS OVER 8 FEET ACCESS FLOORS (SECTION 1705A.12.7)
ARCHITECTURAL COMPONENTS (SECTION 1705A.12.5)
EXTERIOR CLADDING
INTERIOR AND EXTERIOR NON–BEARING WALLS
INTERIOR AND EXTERIOR VENEER
MECHANICAL AND ELECTRICAL COMPONENTS (SECTION 1705A.12.6)
COMPONENT INSPECTION
COMPONENT ATTACHMENT AND TESTING
COMPONENT MANUFACTURER CERTIFICATION

2.14 STRUCTURAL TESTING FOR SEISMIC RESISTANCE (SECTION 1705A.13)
~~MASONRY~~
~~REINFORCING AND PRESTRESSING STEEL~~
STRUCTURAL STEEL
MECHANICAL AND ELECTRICAL EQUIPMENT SEISMIC RESISTANCE TESTING
MANUFACTURER'S CERTIFICATE OF COMPLIANCE ON ANCHORAGE
INSPECTION OF ANCHORAGES AND LABELS

CONTRACTOR RESPONSIBILITY: EACH CONTRACTOR OR SUB–CONTRACTOR RESPONSIBLE FOR THE CONSTRUCTION OF THE WIND AND/OR SEISMIC RESISTING SYSTEM THAT IS LISTED IN THE STATEMENT OF SPECIAL INSPECTIONS SHALL SUBMIT A WRITTEN STATEMENT OF RESPONSIBILITY TO THE BUILDING OFFICIAL AND THE OWNER PRIOR TO COMMENCEMENT OF WORK REQUIRING SPECIAL INSPECTION. THE CONTRACTOR'S STATEMENT OF RESPONSIBILITY SHALL CONTAIN ACKNOWLEDGEMENT OF AWARENESS OF THE SPECIAL REQUIREMENTS CONTAINED IN THE STATEMENT OF OF SPECIAL INSPECTIONS.

	ITEM	CONTINUOUS INSPECTION	PERIODIC INSPECTION	REMARK
CONCRETE	SLAB ON GRADE (f'c= 3000 PSI)	--	YES	PRIOR TO POURING OF CONCRETE & DURING THE TAKING OF TEST SPECIMENS
CONCRETE	WALL, COLUMN FOOTING (f'c= 3000 PSI)	--	YES	PRIOR TO POURING OF CONCRETE & DURING THE TAKING OF TEST SPECIMENS
CONCRETE	GRADE BEAM (f'c= 3000 PSI)	YES	--	PRIOR TO POURING OF CONCRETE & DURING THE TAKING OF TEST SPECIMENS & PLACING OF REINF'D CONCRETE
	BOLTS IN CONCRETE (A307)	--	YES	PRIOR TO AND DURING THE PLACEMENT OF CONC. AROUND BOLTS
FIELD WELDING	STRUCTURAL STEEL (ELECTRODE= E–70xx)	YES	--	DURING THE WELDING
FIELD WELDING	REINFORCING STEEL (ELECTRODE= E–90xx)	YES	--	DURING THE WELDING
	HIGH STRENGTH BOLTS (A325)	--	YES	DURING INSTALLATION OF BOLTS AND TIGHTENING
	PLYWOOD DIAPHRAGM NAILING	--	YES	PRIOR TO COVERING UP
	PLYWOOD SHEARWALL AND HOLDOWN	--	YES	PRIOR TO COVERING UP
	EPOXY ITEMS	YES	--	DURING INSTALLATION
	GRADING, EXCAVATION AND FILLING	YES	--	DURING EARTH–WORK EXCAVATION, GRADING AND FILLING (SEE SOIL REPORT)

4. STRUCTURAL OBSERVATION BY ENGINEER OF RECORD
SECTION 1709, 2022 C.B.C.
STRUCTURAL OBSERVATION SHALL BE PERFORMED FOR THE ITEMS OF WORK DURING THEIR CONTRUCTION PHASE.
THE STRUTURAL OBSEVER SHALL PERFORM SITE VISITS AT THOSE STEPS IN THE PROGRESS OF THE WORK THAT ALLOW FOR CORRECTION OF DEFICIENCIES WITHOUT SUBSTANTIAL EFFORT OR UNCOVERING OF THE WORK INVOLVED. AT A MINIMUM, THE FOLLWING SIGNIFICANT CONSTRUCTION STAGES REQUIRE A VISIT AND AN OBSERVATION REPORT FROM THE STRUCTURAL OBSERVER:

GLUED LAMINATED MEMBER

1. ALL LAMINATED LUMBER SHALL BE PROPERLY KILN–DRIED FOR GLUE LAMINATING AND MOISTURE CONTENT SHALL NOT EXCEED 14%.
2. ALL MEMBERS SHALL CONFORM TO 2022 CBC–NDS TABLES 5A, 5B, 5C & 5D. COMBINATION 24 F,f=2400 P.S.I. – DRY CONDITIONS OF USE. MINIMUM REQUIREMENT: SHEAR f(v)=240 P.S.I.; F1(c) = 450 P.S.I. ON COMPRESSION AND TENSION FACES; E=1.8 X 10^6 P.S.I. MIN. USE 24F–V4 COMBINATION FOR SIMPLE BEAMS AND 24F–V8 FOR CANTILEVERED BEAMS.
3. USE ADHESIVE WATER RESISTANT CASEIN TYPE GLUE WITH MOLD INHIBITOR CONFORMING TO FEDERAL SPECIFICATIONS MMM–125 (WET–USE EXPOSURE CONDITIONS).
4. FABRICATOR SHALL FURNISH ARCHITECT AN "AITC" INSPECTION CERTIFICATE, CERTIFYING THAT THE GLULAM MEMBERS WERE PRODUCED IN ACCORDANCE WITH PROVISIONS OF "AITC" IN–SPECTION MANUAL FOR STRUCTURAL GLUED LAMINATED LUMBER
5. ALL LAMINATED BEAMS SHALL CONFORM TO INDUSTRIAL AP–PEARANCE GRADE UNLESS SHOWN OR SPECIFIED OTHERWISE.
6. TENSION LAMINATION REQUIRED AT TOP & BOTTOM OF ALL CANTILEVER GLULAM BEAMS.
7. IN USE TEMPERATURE OF GLULAM BEAMS NOT TO EXCEED 150 DEG. F.
8. ALL GLULAM MEMBERS EXPOSED TO WEATHER SHALL BE PROTECTED WITH AN APPROVED PRESERVATIVE.
9. PROVIDE STANDARD 1600 FOOT RADIUS CAMBER U.N.O.

METAL SYS. STUDS (METAL STUD MANUFACTURER'S ASSOCIATION - ESR_3064P OR EQUAL APPROVED)

1. ALL METAL STUDS OR JOIST SHALL BE OF THE TYPE, SIZE & GAGE AS SHOWN ON THE PLANS. FOR OTHER INFO. SEE ESR–3064P.
2. ALL STUDS, JOISTS AND TRACKS 12, 14, AND 16 GAGE SHALL BE FORMED FROM STEEL THAT CORRESPONDS TO THE REQUIREMENTS OF ASTM A446, GRADE D, WITH MINIMUM YIELD OF 50,000 PSI. ALL 18 AND 20 GAGE STUDS AND ALL GALVANIZED TRACK, BRIDGING, CLOSURES AND ACCESSORIES SHALL BE FORMED FROM STEEL THAT CORRESPONDS TO THE REQUIREMENTS OF ASTM A446 GRADE A WITH A MINIMUM YIELD OF 33,000 PSI.
3. ALL FRAMING COMPONENTS SHALL BE CUT SQUARELY OR ON AN ANGLE, AS FOR BRACING, TO SQUARELY FIT AGAINST ABUTTING MEMBERS. MEMBERS SHALL BE HELD FIRMLY IN POSITION UNTIL PROPERLY FASTENED.
4. ATTACHMENTS OF SIMILAR COMPONENTS SHALL BE ATTACHED BY WELDING. DISSIMILAR STUD COMPONENTS SHALL BE DONE BY WELDING, SCREW ATTACHING OR BUTTING. WIRE TYING OF FRAMING COMPONENTS IN STRUCTURAL APPLICATIONS SHALL NOT BE PERMITTED. PREFABRICATED PANELS SHALL BE SQUARED AND BRACED AGAINST RACKING. LIFTING OF PREFABRICATED PANELS SHALL BE DONE IN A MANNER SO AS NOT TO CAUSE LOCAL DISTORTION OF ANY MEMBER.
5. BUTT WELDS OR SPLICES SHALL BE USED AT ALL BBUTT JOINTS IN TRACK. SPLICES IN AXIAL LOADED STUDS OR BRACES SHALL NOT BE PERMITTED. ALL WELDS SHALL BE FILLET, PLUG BUTT OR SEAM. WHERE CONNECTED TO STRUCTURAL STEEL, WELDING SHALL NOT BE DONE ON STRAIGHT PORTIONS OF FLANGE OR WEB BUT ONLY AT INTERSECTION OF FLANGE AND WEB. WHERE STUDS ARE BURNED THROUGH BY WELDING PROVIDE SUITABLE STITCH PLATE.
6. WALL STUD BRIDGING SHALL BE INSTALLED IN A MANNER TO PROVIDE RESISTANCE TO BOTH MINOR AXIS BENDING AND ROTATION. BRIDGING ROWS SHALL BE EQUALLY SPACED NOT TO EXCEED 4'–0" ON CENTERS.

SPECIAL INSPECTION AND QUALITY ASSURANCE

1. SPECIAL INSPECTION PER 2022 C.B.C. CHAPTER 17A
SECTION 1704A= SPECIAL INSPECTION.
SECTION 1705A.12= SPECIAL INSPECTION FOR SEISMIC RESISTANCE.
SECTION 1705A.13= STRUCTURAL TESTING FOR SEISMIC RESISTANCE.
SECTION 1704A.3= STATEMENT OF SPECIAL INSPECTION.
   A. THE SPECIAL INSPECTOR SHALL OBSERVE THE WORK ASSIGNED FOR CONFORMANCE WITH THE APPROVED DESIGN DRAWINGS AND SPECIFICATIONS.
   B. THE SPECIAL INSPECTOR SHALL FURNISH INSPECTION REPORTS TO THE BUILDING OFFICIAL, THE ENGINEER OR ARCHITECT OF RECORD, & OTHER DESIGNATED PERSONS. ALL DISCREPANCIES SHALL BE BROUGHT TO THE IMMEDIATE ATTENTION OF THE CONTRACTOR FOR CORRECTION, THEN, IF UNCORRECTED, TO THE PROPER DESIGN AUTHORITY AND TO THE BUILDING OFFICIAL.
   C. THE SPECIAL INSPECTOR SHALL SUBMIT A FINAL SIGNED REPORT STATING WHETHER THE WORK REQUIRING SPECIAL INSPECTION WAS, TO THE BEST OF THE INSPECTOR'S KNOWLEDGE, IN CONFORMANCE WITH THE APPROVED PLANS AND SPECIFICATIONS AND THE APPLICABLE WORKMANSHIP PROVISIONS OF THE CURRENT BUILDING CODE.

2. SPECIAL INSPECTION SHALL BE REQUIRED FOR THE FOLLOWING TYPES OF WORK:(AS MARKED)
2.1 STEEL CONSTRUCTION (TABLE 1705A.1 AND SECTION 1705A.2)
~~MATERIAL VERIFICATION OF HIGH STRENGTH BOLTS,~~
STRUCTURAL STEEL, WELD FILLER
WELDING (SECTION 1705A.2.5 AND TABLE 1705A.2.1)
STRUCTURAL STEEL
REINFORCING STEEL
DETAILS OF STEEL FRAMES (TABLE 1705A.2.1)
~~HIGH STRENGTH BOLTING (SECTION 1705A.2.1)~~
MANUFACTURER'S CERTIFICATE OF COMPLIANCE
VERIFICATION OF APPROVED FABRICATOR
BEARING AND BASE PLATE GROUTING
NON–DESTRUCTIVE TESTING.
2.2 CONCRETE CONSTRUCTION (TABLE 1705A.3 AND SECTION 1705A.3)
MATERIALS
REINFORCING STEEL
PRESTRESSING STEEL
WELDING REINFORCING STEEL
BOLTS IN CONCRETE
~~SHOTCRETE AND PLACEMENT~~
~~PRESTRESSED CONCRETE~~
~~ERECTION OF PRECAST CONCRETE MEMBERS~~
SLAB ON GRADE, EXCEPT NON–STRUCTURAL CONCRETE SLAB
DESIGN MIX
CONCRETE CYLINDERS, SLUMP, AIR, TEMPERATURE
CURING
IN–SITU CONCRETE STRENGTH
2.3 MASONRY CONSTRUCTION (SECTION 1705A.4)
2.4 WOOD CONSTRUCTION (SECTION 1705A.5)
VERIFICATION OF APPROVED FABRICATOR OR PREFABRICATED WOOD STRUCTURAL ELEMENTS
FABRICATION OF HIGH LOAD DIAPHRAGMS (SHEATHING, NAILING, FASTENING, FRAMING)
2.5 SOILS (TABLE 1705A.6 AND SECTION 1705A.6)
SITE PREPARATION
FILL PLACEMENT
IN–PLACE DENSITY
2.6.1 ~~DRIVEN DEEP FOUNDATIONS (TABLE 1705A.7 AND SECTION 1705A.7)~~
2.6.2 ~~CAST–IN–PLACE FOUDNATIONS (TABLE 1705A.8 AND SECTION 1705A.8)~~
2.7 ~~HELICAL PILE FOUNDATIONS (SECTION 1705A.9)~~
2.8 VERTICAL MASONRY FOUNDATION ELEMENTS (SECTION 1705A.4.2)
2.9.1 ~~SPRAYED FIRE RESISTANT MATERIALS (SECTION 1704.10)~~
2.9.2 MASTIC AND INTUMESCENT FIRE–RESISTANT COATINGS (SECTION 1704.11)
2.10 EXTERIOR INSULATION AND FINISH SYSTEMS (EIFS) (SECTION 1704.12)
2.11 SPECIAL CASES
REBAR OR BOLT IN EPOXY GROUT
HOLD–DOWN SUBSTITUTION IN TENSION
ROCK RETAINING WALLS (ROCK PLACEMENT, ROCK SIZE, FOOTING, EMBEDMENT, DRAINAGE, BACKFILL, COMPACTION, FILTER FABRIC, BATTER, SLOPE AND OTHER ITEMS SPECIFIED BY ENGINEER RECORD).
EXPANSION ANCHORS, EMBEDDED PLATES
MECHANICAL SPLICES
2.12 SMOKE CONTROL SHALL BE APPROVED BY LOCAL FIRE DEPARMENT. (SECTION 1705A.18)
2.13 SPECIAL INSPECTIONS FOR SEISMIC RESISTANCE (SECTION 1705A.12)
STRUCTURAL STEEL (SECTION 1705A.12.1.1
STRUCTURAL WELDING (SECTION 1705A.12.1.2)

STRUCTURAL STEEL AND MISCELLANEOUS IRON

1. STRUCTURAL STEEL AND MISCELLANEOUS IRON SHALL CONFORM TO AISC 360.
(ALL ROLLED STEEL SECTIONS AND/OR BOLTS MANUFACTURED OUTSIDE THE UNITED STATES WILL REQUIRE VERIFICATION THAT THE PRODUCTS COMPLY WITH APPLICABLE ASTM STANDARDS. MILL CERTIFICATES WILL BE REQUIRED FOR ALL STEEL. STEEL GRADES OTHER THAN ASTM A36 WILL REQUIRE TESTING BY AN APPROVED LABORATORY. ALL FOREIGN BOLTS MUST BE APPROVED BY BUILDING AND SAFETY DEPARTMENT PRIOR TO THEIR USE.
   A. CONFORM TO AISC MANUAL OF STEEL CONSTRUCTION, LATEST EDITION.
   B. MATERIALS:
   ASTM A 992 — Fy = 50 KSI FOR I–SHAPES
   ASTM A 36 — Fy = 36 KSI FOR PLATES AND ANGLES
   ASTM A 500, GRADE C — Fy = 50 KSI FOR RECTANGULAR HSS
   ASTM A 500, GRADE C — Fy = 46 KSI FOR ROUND HSS
   ASTM A 325 — TYPE 1, FOR HIGH STRENGTH BOLTS
   ASTM A 563 — HEAVY–HEX NUTS
   ASTM AF436 — HARDENED STEEL WASHERS
   ASTM F1554 GRADE 36 — FOR ANCHOR BOLTS
2. WELDING SHALL CONFORM TO LATEST ANSI/ AWS D1.1, AND BE DONE BY ELECTRIC SHIELDED ARC PROCESS USING E–70XX ELECTRODES. WELDING FOR STEEL MOMENT FRAME SHALL ALSO CONFORM TO AWS D1.8, ALL WELDS SHALL BE UNIFORM IN SIZE AND APPEARANCE, AND FREE OF PINHOLES, POROSITY, UNDER–CUTTING OR OTHER DEFECTS. ALL BUTT WELDS SHALL BE FULL PENETRATION.
3. WELDS SHALL BE DONE IN THE SHOP OF A APPROVED FABRICATOR UNLESS OTHERWISE NOTED ON PLANS. ALL THE FIELD WELDING SHALL BE PERFORMED BY QUALIFIED WELDERS APPROVED BY THE BUILDING OFFICIAL AND CONTINUOUS INS–PECTION BY AN APPROVED DEPUTY INSPECTOR IS REQUIRED.
4. STRUCTURAL STEEL NOT ENCASED IN CONCRETE OR MASONRY SHALL BE SHOP PAINTED AS SPECIFIED. ANY ABRASION SHALL BE TOUCHED–UP AFTER ERECTION.
5. FABRICATOR SHALL SUBMIT SHOP DRAWINGS TO STRUCTURAL ENGINEER FOR REVIEW PRIOR TO START FABRICATION. FAB–RICATION SHALL CONFORM TO A.I.S.C. SPECIFICATION.
6. BOLTS SHALL CONFORM TO ASTM A325 UNLESS OTHERWISE NOTED.
7. ALL STEEL FABRICATIONS SHALL BE DONE IN A SHOP LI–CENSED BY THE GOVERNING CITY OR COUNTY.
8. ANCHOR RODS
   a). ANCHOR RODS SHALL CONFORM TO ASTM F1554, GRADE 36, THREADED AND HEADED ANCHOR RODS.
   b). NUT OF ANCHOR RODS SHALL CONFORM TO ASTM A563 NUT, GRADE A HEAVY HEX.
   c). SEE PLANS FOR ANCHOR ROD INFORMATION (SIZE, AMOUNT, EMBED)

WOOD FRAMING

1. ALL WOOD SHALL CONFORM TO THE CHAPTER 23 OF 2022 CBC ALL STRUCTURAL FRAMING MEMBERS SHALL BE GRADE MARKED DOUGLAS FIR AS FOLLOWS UNLESS NOTED OTHERWISE ON PLANS (MOISTURE 19% MAXIMUM):
   A. ALL HORIZONTAL FRAMING MEMBERS AND POSTS SHALL BE D.F. NO. 1.
   B. ALL STUDS AND BRACES SHALL BE D.F. NO. 1 OR BETTER U.N.O.
2. ALL BOLTS SHALL BE STANDARD MACHINE BOLTS WITH M.I. OR STEEL PL WASHERS WHEN HEAD OR NUT BEARS ON WOOD. HOLES FOR BOLTS SHALL BE DRILLED WITH A BIT 1/32" LARGER THAN THE NOMINAL BOLT DIAMETER. TIGHTEN ALL BOLTS BEFORE PLASTERING.
3. NO STRUCTURAL MEMBER SHALL BE CUT WITHOUT THE APPROVAL OF THE STRUCTURAL ENGINEER. ANY CUTTING, NOTCHING BORING OF WOOD SHALL CONFORM TO THE LOCAL BUILDING CODE.
4. TYPICAL SILL BOLTING SHALL BE 5/8" DIA. X 10" ANCHOR BOLTS AT 4'–0" O.C. PROVIDE ONE BOLTS WITHIN NINE INCHES OF EACH END OF EACH SILL PIECE AND AT CORNERS.
5. UNLESS OTHERWISE NOTED ON PLANS, ALL STRUCTURE PLY–WOOD SHALL BE INTERIOR GRADE PLYWOOD WITH EXTERIOR GLUE. STRUCTURAL I CONFORMING TO PS 1, LATEST EDITION.
6. FOR NAILING (ALL NAILS SHALL BE COMMON U.N.O.) OF LUMBER SEE TABLE 2304.10.1 NAILING SCHEDULE OF 2022 CBC.

SIZE OF NAILS	DIAMETER	STANDARD LENGTH
8d	0.131"	2 1/2"
10d	0.148"	3"
16d	0.162"	3 1/2"

7a. ALL SILL PLATES RESTING ON CONCRETE OR MASONRY SHALL BE PRESSURE TREATED DOUGLAS FIR UTILITY GRADE OR FOUNDATION GRADE REDWOOD.
7b. ALL FASTENERS FOR PRESSURE PRESERVATIVE TREATED WOOD SHALL BE HOT DIPPED ZINC COATED GALVANIZED, STAINLESS STEEL, SILICON BRONZE OR COPPER.
8. ALL LEDGER BOLTS SHALL BE SET IN WALLS TO INSURE PROPER ROOF SLOPE PER DRAINAGE PLAN. VERIFY ALL CONDITIONS PRIOR TO SETTING BOLTS.
9. LAG BOLTS AND SCREWS SHALL BE PREDRILLED. THE DIA. OF PREDRILLED HOLES SHALL BE 60% OF SHANK DIAMETER. THE THREADED PORTION OF THE SCREW SHALL BE INSERTED BY TURNING WITH A WRENCH, NOT BY DRIVING WITH A HAMMER. PENETRATION OF THREADED PORTION SHALL BE 7 DIAMETER MINIMUM.
10. WHEN LAMINATING VERTICALLY 2–2" X MEMBERS TOGETHER, USE 16d NAILS AT 9" O.C. STAGGERED.
11. ENDS OF WOOD MEMBERS ENTERING MASONRY WALLS SHALL HAVE A 1/2" AIR SPACE AROUND TOP. END AND SIDES UNLESS WOOD IS TREATED WITH APPROVED PRESERVATIVES.
12. ALL HARDWARE CONNECTING WOOD MEMBERS SHALL BE RECESSED WHEN REQUIRED BY ARCHITECTURAL FINISH. VERIFY WITH ARCHITECTURAL PLANS, TYPICAL.
13. FRAMING ANCHORS, JOIST HANGERS, POST CAPS, POST BASES, TIE DOWNS, ETC, SHALL BE AS MANUFACTURED BY "SIMPSON" OR AN APPROVED EQUAL.
14. NOTCHING OF EXTERIOR AND BEARING/NON–BEARING WALLS STUDS SHALL NOT EXCEED 25%/40% RESPECTIVELY. BORED HOLES IN BEARING/NON–BEARING WALLS STUDS SHALL NOT EXCEED 40%/60% RESPECTIVELY.

DEFERRED ITEMS:

1. CONTRACTOR SHALL SUBMMIT ALL ITEMS LISTED BELOW TO THE ARCHITECT OR ENGINEER OF RECORD FOR REVIEW AND FORWARD THEM TO THE BUILDIING OFFICIAL WITH A NOTATION INDICATING THAT THE DEFERRED SUBMITTAL DOCUMENTS HAVE BEEN REVIEWED AND THAT THEY HAVE BEEN FOUND TO BE IN GENERAL CONFORMANCE WITH THE DESIGN OF THE BUILDING.
2. THE DEFERRED SUBMITTAL ITEMS SHALL NOT BE INSTALLED UNTIL THEIR DESIGN AND SUBMITTAL DOCUMENTS, HAVE BEEN APPROVED BY THE BUILDING OFFICIAL.
3. ITEMS TO DEFERRED:
   a. ROOF TRUSS JOISTS.

DRYPACK

1. DRYPACK SHALL BE 5,000 PSI NON–SHRINK GROUT, FIVE STAR OR EQUIVALENT APPROVED.
2. INSTALL DRYPACK UNDER ALL BEAM BEARING PLATES PRIOR TO FRAMING MEMBER IS INSTALLED.
3. INSTALL DRYPACK UNDER ALL COLUMN BASE PLATES AFTER COLUMN HAS BEEN PLUMBED; PRIOR TO FLOOR OR ROOF INSTALLATION.

GENERAL FOUNDATION NOTES

1. ATTACH ONE COPY OF SOIL REPORT TO THE APPROVED SET. SOIL REPORT SHALL BE PART OF THIS NOTES. PRIOR TO THE POURING OF CONCRETE, THE SOIL ENGINEER SHALL INSPECT AND APPROVE THE FOOTING EXCAVATIONS. HE SHALL POST A NOTICE ON THE JOB SITE FOR THE BUILDING INSPECTOR THAT THE WORK SO INSPECTED MEETS THE CONDI–TIONS OF THE REPORT. A WRITTEN CERTIFICATION TO THIS EFFECT SHALL BE FILED WITH THE BUILDING DEPARTMENT UPON COMPLETION OF THE WORKS. THIS INSPECTION DOES NOT WAIVE THE REQUIRED INSPECTION BY THE BUILDING INS–PECTOR.
2. SOIL REPORT BY: GEOCON WEST, INC.
   41571 CORNING PLACE, SUITE 101
   MURRIETA, CA 92562
   TEL.: (951) 304–2300
   JOB #: T2718–22–04
   DATED: OCTOBER 3, 2017
3. SOIL REMOVAL AND RECOMPACTION SHALL BE DONE PER SOIL REPORT RECOMMENDATIONS UNDER SOIL ENGINEER'S SUPERVI–SION AND INSPECTION.
4. TYPE OF FOOTING --- SHALLOW, SPREAD FOOTING SYSTEM.
   MIMIMUM EMBEDMENT : 18" BELOW LOWEST ADJACENT NATURAL GROUND OR COMPACTED FILL.

   DESIGN SOIL PRESSURE: ADJACENT TO LANDSCAPE.)
   CONTINUOUS FTG. : 4000 PSF
   ISOLATED FTG. : 4000 PSF
5. SLAB BASE AND COMPACTION TO BE IN ACCORDANCE WITH SOIL REPORT.
6. FOR ALL DIMENSIONS, CURBS, SLAB DEPRESSIONS, STOP, FLOOR DRAINS, SINKS, TRENCHES, UNDERFLOOR DUCTS AND CONDUITS. SEE ARCHITECTURAL, MECHANICAL, REFRIGERA–TION, AIR CONDITIONING, PLUMBING & ELECTRICAL DRAW–INGS, TRENCH BACKFILL AS PER SOIL REPORT REQUIRE–MENTS.
7. UTILITY TRENCHES PARALLEL OR SUBPARALLEL WITH FOUNDATIONS SHOULD NOT BE CONSTRUCTED WITHIN A ZONE DEFINED BY A LINE THAT EXTENDS AT AN INCLINATION OF 2 HORIZONTAL TO 1 VERTICAL DOWNWARD FROM THE BOTTOM OF BUILDING FOUNDATIONS, AS RECOMMENDED IN THE SOILS REPORT. IF A CONFLICT EXISTS BETWEEN THIS RECOMMENDATION AND PROJECT PLANS, THE CONTRACTOR SHOULD CONTACT THE ARCHITECT AND THE SOILS ENGINEER FOR ADDITIONAL RECOMMENDATIONS.
8. BRIDGE CONTINUOUS FOOTING OVER TRENCH WITH 4 – #6 x 16'–0" LONG BARS AT BOTTOM. CENTER BARS ON TRENCH. VERIFY ALL CONDITIONS IN FIELD.
9. ALL PLANTERS IN CLOSE PROXIMITY TO THE STRUCTURE SHALL HAVE ADEQUATE DRAINAGE OF SURFACE WATER TO PREVENT SATURATION OF SOIL UNDER FOUNDATION.
10. USE STEPPED FOOTING DETAIL AS REQUIRED, SEE GRADING PLAN.

REINFORCING STEEL

1. REINFORCING STEEL SHALL BE DEFORMED BARS OF INTER–MEDIATE GRADE CONFORMING TO ASTM SPECIFICATION: A615 GRADE 60 FOR BARS #4 AND SMALLER: A615 GRADE 60 FOR BARS #5 AND LARGER. MESH REINFORCING SHALL BE 6X6 – W1.4 X W1.4 UNLESS SHOWN OTHERWISE, CONFORMING TO ASTM SPECIFICATION A185.
2. REINFORCEMENT MARKED CONTINUOUS MAY BE SPLICED BY

   LAPPING 64 BAR DIAMETERS IN MASONRY WITH A 24 INCH MINIMUM LAP EACH CASE.
3. MIN LAP OF WELDED WIRE FABRIC SHALL BE 6" OR ONE FULL MESH, WHICHEVER IS GREATER.
4. DOWELS FROM FOOTINGS SHALL BE OF THE SAME SIZE AND SPACING AS VERTICAL WALLS AND COLUMNS REINFORCEMENT, UNLESS NOTED OTHERWISE ON PLANS.
5. PROVIDE SPACER BARS, SPREADERS, CHAIRS, BLOCKS, ETC., AS REQUIRED TO SECURELY HOLD STEEL IN PLACE.
6. REINFORCING BARS CONFORMING TO ASTM A706 SHALL BE USED FOR REBARS REQUIRING WELDING AND ALL GRADE BEAM REINFORCING

CONCRETE

1. PORTLAND CEMENT SHALL BE TYPE V CONFORMING TO A.S.T.M. SPECIFICATION C 150. AGGREGATES SHALL BE NORMAL WEIGHT CONFORMING TO A.S.T.M. SPECIFICATION C 33, WITH PROVEN SHRINKAGE CHARACTERISTICS OF LESS THAN 0.04%. USE SPECIAL TYPE OF CEMENT WHERE REQUIRED BY SOIL CONDITIONS --- SEE SOIL REPORT. TYPE II CEMENT FOR SLAB ON GRADE.
2. ALL CONCRETE SHALL BE DESIGNED BY APPROVED LABORATORY, AND DESIGN MIX SHALL SUBMIT TO ARCHITECT/ENGINEER FOR REVIEW, AND OBTAIN APPROVAL PRIOR TO USE.
   MAXIMUM SLUMP SHALL BE 4" U.N.O.
   USE MINIMUM OF FIVE SACKS OF CEMENT PER CUBIC YARD.
   CONC. FOOTING (WALL CONT. FTG.) : 3000 PSI @ 28 DAY
   CONC. FOOTING (COLUMN PAD) : 3000 PSI @ 28 DAY
   GRADE BEAM : 3000 PSI @ 28 DAY
   SLAB ON GRADE : 3000 PSI @ 28 DAY
   WATER CEMENT RATIO=0.45 MAX. FOR f'c=4,500PSI
3. NO PIPES OR DUCTS SHALL BE PLACED IN STRUCTURAL CONCRETE UNLESS SPECIFICALLY DETAILED. SEE ARCHITEC–TURAL AND MECHANICAL DRAWINGS FOR LOCATION OF SLEEVES, MOULDS, FLOOR HINGES, ETC., TO BE CAST INTO THE CONCRETE.
4. VIBRATION OF CONCRETE SHALL BE PERFORMED IN ACCORDANCE WITH THE PORTLAND CEMENT ASSOCIATION SPECIFICATION.
5. CONCRETE SHALL BE MAINTAINED IN A MOIST CONDITION FOR A MINIMUM OF SEVEN DAYS AFTER ITS PLACEMENT: APPROVED CURING COMPOUNDS MAY BE USED IN LIEU OF MOIST CURING.

PREFABRICATED WOOD ROOF AND FLOOR MEMBERS

1. ALL ROOF AND FLOOR PREFABRICATED JOIST MEMBERS SHALL BE MANUFACTURED BY TRUS–JOIST CORP OR APPROVED. MINIMUM CAPACITY OF THE ALTERNATE TRUSSES SHOULD BE EQUAL TO, OR LARGER THAN THE MEMBERS AS INDICATED ON THE ROOF FRAMING PLANS – NO EXCEPTIONS ALLOWED
2. ALL JOISTS SHALL CONFORM TO ALL PROVISIONS OF THE 2022 CBC.
3. JOISTS SHALL NOT EXCEED A LIVE LOAD DEFLECTION OF L/360 AT FLOORS OR THE WORKING STRESSES AS SHOWN IN THE "CODE" STANDARDS.
4. JOIST MANUFACTURER SHALL FURNISH COMPLETE ENGINEERING SHOP DRAWING WITH REGISTERED STRUCTURAL ENGINEER'S SEAL.
5. OPEN WEB SERIES
   A. MANUFACTURER SHALL FURNISH ALL PRE–NOTCHED WOOD BEARING PLATES.
   B. MANUFACTURER SHALL FURNISH ALL NO–NOTCHED BEARING CLIPS.
   C. MANUFACTURER SHALL VERIFY SLOPED BEARING REQUIRE–MENTS AND COORDINATE WITH CONTRACTOR.
   SOLID SERIES
   A. MANUFACTURER SHALL FURNISH ALL END AND INTERMEDIATE STIFFENERS, BLOCKING AND/OR SHEAR PANELS. METAL BRIDGING ASSEMBLIES & HANGER AS REQUIRED TO PROVIDE A COMPLETE ROOF STRUCTURAL SYSTEM.
   B. MANUFACTURER SHALL FURNISH ALL BRIDGING & BRACING AS REQUIRED TO PROVIDE A COMPLETE FLOOR OR ROOF SYSTEM.
6. CAMBERS
   A. ROOF MEMBERS 1.25 DEAD LOAD DEFLECTION.
   B. FLOOR MEMBERS 1.25 DEAD LOAD DEFLECTION.
7. DOUBLE ALL JOISTS UNDER MECHANICAL UNITS, UNLESS OTHER–WISE NOTED & APPROVED BY JOIST SUPPLIER.
8. SPRINKLER LINE ATTACHMENTS SHALL CONFORM TO N.F.P.A. PAMPHLET 13A & TRUS–JOIST PUBLICATION "GUIDELINES FOR SPRINKLER SYSTEM INSTALLATION WITH TRUS–JOIST". LOADS HUNG FROM TRUS–JOISTS SHALL NOT EXCEED THIRTY (30) POUNDS AT ANY ONE (1) POINT, NOR SHALL TOTAL LOADS IN POUNDS ON ANY ONE (1) JOIST EXCEED SIX (6) TIMES THE SPAN IN FEET, UNLESS DETAILED OTHERWISE ON THE DRAWINGS. ATTACHMENT OF LOADS EXCEEDING ON HUNDRED (100) POUNDS SHALL BE APPROVED PRIOR TO INSTALLATION. DO NOT NOTCH OR DRILL STRUCTURAL MEMBERS, EXCEPT AS ALLOWED BY "CODE" OR AS APPROVED PRIOR TO INSTALLATION.

ABBREVIATIONS

ABV.	=	ABOVE
B.	=	BOTTOM
BEL.	=	BELOW
B.O.F.	=	BOTTOM OF FOOTING
B.S.	=	BOTH SIDES
E.S.	=	EACH SIDE
E.W.	=	EACH WAY
F.O.S.	=	FACE OF STUD
F.O.SH.	=	FACE OF SHEATHING
O.C.	=	ON CENTER
T.	=	TOP
T&B	=	TOP AND BOTTOM
T.O.F.	=	TOP OF FOOTING
T.O.M.	=	TOP OF MASONRY
T.O.P.	=	TOP OF PARAPET
T.O.D.	=	TOP OF DECK
T.O.S.	=	TOP OF SLAB
T.O.SH.	=	TOP OF SHEATHING
T.O.ST.	=	TOP OF STEEL
V.I.F.	=	VERIFY IN FIELD

CODE:
2022 CBC

GENERAL

1. THE CONTRACTOR SHALL VERIFY ALL DIMENSIONS PRIOR TO STARTING CONSTRUCTION. THE ARCHITECT SHALL BE NOTIFIED OF ANY DISCREPANCES OR INCONSISTENCIES.
2. DO NOT SCALE THE DRAWINGS.
3. NOTES AND DETAILS ON THE DRAWINGS SHALL TAKE PRECEDENCE OVER THESE GENERAL NOTES AND TYPICAL DETAILS.
4. ALL WORK SHALL CONFORM TO THE MINIMUN STANDARDS OF THE FOLLOWING CODES: THE 2022 CALIFORNIA BUILDING CODE, AND OTHER REGULATING AGENCIES WHICH HAVE AUTHORITY OVER ANY PORTION OF THE WORK, AND THOSE CODES AND STANDARDS LISTED IN THESE NOTES AND IN THE PROJECT SPECIFICATIONS.
5. SEE THE ARCHITECTURAL DRAWINGS FOR THE FOLLOWING:
   SIZE AND LOCATION OF DOORS AND WINDOW OPENINGS.
   SIZES AND LOCATIONS OF INTERIOR AND EXTERIOR NON–BEARING PARTITIONS.
   SIZES AND LOCATIONS OF CONCRETE CURBS, FLOOR DRAINS, SLOPES, DEPRESSED AREAS, CHANGES IN LEVEL, CHAMFERS, GROOVES, INSERTS, ETC.
   FLOOR AND ROOF FINISHES.
   STAIR FRAMING AND DETAILS.
   DIMENSIONS HOT SHOWN ON THE STRUCTURAL DRAWINGS.
   CEILING ASSEMBLIES.
   EXTERIOR WALL ASSEMBLIES.
6. SEE MECHANICAL, PLUMBING AND ELECTRICAL DRAWINGS FOR THE FOLLOWING:
   PIPES, SLEEVES, HANGERS, TRENCHES, WALL FLOOR AND ROOF OPENINGS, DUCT PENETRATION ETC., EXCEPT AS SHOWN OR NOTED.
   ELECTRICAL CONDUIT RUNS, BOXES, OUTLETS IN WALLS AND SLABS.
   CONCRETE INSERTS FOR ELECTRICAL, MECHANICAL OR PLUMBING FIXTURES.
   SIZE AND LOCATION OF MACHINE OR EQUIPMENT BASES, ANCHOR BOLTS FOR MOUNTS.
7. THE CONTRACT STRUCTURAL DRAWINGS AND SPECIFICATIONS REPRESENT THE FINISHED STRUCTURE. THEY DO NOT INDICATE THE METHOD OF CONSTRUCTION.
8. THE CONTRACTOR SHALL PROVIDE ALL MEASURES NECESSARY TO PROTECT THE STRUCTURE DURING CONSTRUCTION. SUCH MEASURES SHALL INCLUDE, BUT NOT LIMITED, TO BRACING AND SHORING FOR LOADS DUE TO HYDROSTATIC, EARTH, WIND OR SEISMIC FORCES, CONSTRUCTION EQUIPMENT, ETC. OBSERVATION VISITS TO THE SITE BY THE STRUCTURAL ENGINEER SHALL NOT INCLUDE INSPECTION OF THE ABOVE ITEMS.
9. NOTIFY THE STRUCTURAL ENGINEER WHEN DRAWINGS BY OTHERS SHOW OPENINGS, POCKETS, ETC., NOT SHOWN ON THE STRUCTURAL DRAWINGS, BUT WHICH ARE LOCATED IN THE STRUCTURAL MEMBERS.
10. ALL SPECIFICATIONS AND CODES NOTED SHALL BE THE LATEST. APPROVED EDITIONS AND REVISIONS BY THE GOVERNMENTAL AGENCY HAVING JURISDICTION OVER THIS PROJECT.
11. CONTRACTOR SHALL INVESTIGATE THE SITE DURING CLEARING AND EARTH WORK OPERATIONS FOR FILLED EXCAVATIONS OR BURIED STRUCTURES SUCH AS CESSPOOLS, CISTERNS, FOUNDATIONS, UTILITIES, ETC. IF ANY SUCH STRUCTURES ARE FOUND, THE STRUCTURAL ENGINEER SHALL BE NOTIFIED INMEDIATELLY.
12. CONSTRUCTION MATERIALS SHALL BE SPREAD OUT WHEN PLACED ON FRAMED FLOORS OR ROOFS. THE CONSTRUCTION MATERIAL LOAD SHALL NOT EXCEED THE DESIGN LIVE LOAD PER SQUARE FOOT. PROVIDE ADEQUATE SHORING AND/OR BRACING WHERE STRUCTURE HAS NOT ATTAINED DESIGN STRENGTH.
13. SHOP DRAWINGS SUBMITTED TO THE STRUCTURAL ENGINEER FOR REVIEW SHALL CONSIST OF 1 BLUELINE SET AND 1 SEPIA SET.

DESIGN LOADS

A. WIND DESIGN DATA
1. BASIC WIND SPEED (3 SECOND GUST) ..... V_{3S} = 96 MPH
2. WIND IMPORTANCE FACTOR ..... I_W = 1.0
3. WIND EXPOSURE C
4. OCCUPANCY CATEGORY II
5. DETERMINATION OF WIND LOAD ENVELOPE PROCEDURE FOR LOW RISE BUILDINGS AS SPECIFIED IN CHAPTER 28.

B. EARTHQUAKE DESIGN DATA
1. SEISMIC IMPORTANCE FACTOR ..... I_E = 1.0
   SEISMIC USE GROUP II
2. MAPPED SPECTRAL RESPONSE ACCELERATION ..... S_S = 2.41
   S_1 = 0.87
3. SITE CLASS ..... D
4. SPECTRAL RESPONSE COEFFICIENTS ..... S_{DS}= 1.71
   S_{D1}= 1.53
5. SEISMIC DESIGN CATEGORY ..... D
6. BASIC SEISMIC FORCE RESISTING SYSTEM:
   LIGHT FRAME SHEATHED WITH WOOD STRUCTURAL PANELS
7. DESIGN BASE SHEAR ..... $V= C_S W$
8. SEISMIC RESPONSE COEFFICIENTS ..... $C_S = S_{DS}/R$
9. DESIGN COEFFICIENTS AND FACTORS
   LIGHT FRAME SHEATHED WITH WOOD STRUCTURAL PANELS RATED FOR SHEAR RESISTANCE: ..... R = 6 1/2 $\Omega = 3$ $C_d = 4$
10. ANALYSIS PROCEDURE USED: EQUIVALENT LATERAL FORCE ANALYSIS

C. ROOF LIVE LOAD — 20 PSF REDUCIBLE
FLOOR LIVE LOAD — 50 PSF REDUCIBLE

SITE PREPARATIONS

1. ALL EXCAVATIONS, PREPARATION FOR SLAB ON GRADE, DEPTH OF FOOTINGS, BACK FILL, ETC., SHALL BE PERFORMED IN ACCOR–DANCE WITH THE SOIL ENGINEER'S RECOMMENDATIONS. ANY DIS–CREPANCIES BETWEEN THE SOIL ENGINEER'S REPORT AND THE FOUNDATION PLANS MUST BE BROUGHT TO THE ATTENTION OF THE STRUCTURAL ENGINEER PRIOR TO INITIATING ANY EXCAVATION SO THAT PROPER REMEDIAL WORK CAN BE PERFORMED.

ktgy
17911 Von Karman Ave.
Suite 200
Irvine, CA 92614
ktgy.com
949.851.2133

ktgy Project Number
Contact — DORINA WATSON
Email — dwatson@ktgy.com
Senior Director — DAVID SCHMITZ
Designer — RUSSEL ROSALES

Developer
SEDC
23906 SOBOBA ROAD
SAN JACINTO, CA 92581

PHONE: (951) 663-2058

SOBOBA SOVOVATUM VILLAGE PHASE-2
-
SAN JACINTO, CA

No.	DATE	DESCRIPTION
	5/22/2026	FOR BID

Client is responsible for notifying architect in writing for any discovered errors or omissions in the plans and specifications during construction of the project. Failure for Client to notify Architect of any known errors or omissions in the plans or specifications, and proceeding with constructing the portion of work shown in the plans or specifications containing known errors or omissions shall be a waiver by Client for any liability of Architect for such known errors or omissions. Client releases Architect for any liability for such portions of work, and Architect shall not be liable for any delay damages, change orders, repair costs, removal or demolition costs, or replacement of any such portions of work.

REGISTERED PROFESSIONAL ENGINEER — ANDY M. YU — NO. C27612 — EXP. 12-31-27 — CIVIL — STATE OF CALIFORNIA

ANF & ASSOCIATES
Consulting Structural Engineers
T: (626) 448-8182
F: (626) 448-8092
E: anf1688@anfstructural.com
JOB# 025817.11
923 East Valley Blvd., Suite 268, San Gabriel, CA 91776

Sheet_Name

GENERAL NOTES

2026-05-26, ISSUED FOR BID

ST0

Printed : 1/7/2026 4:29:06 PM

COPYRIGHT 2024 KTGY GROUP INC. These plans and specifications are protected by United States copyright law and may not be used, reproduced, distributed, transmitted, displayed, or modified in any way without the prior written consent of KTGY Group, Inc. or the authorized copyright holder or licensee.

SLAB AT STOREFRONT — 21

1. STOREFRONT SEE ARCH'L
2. BLOCKOUT FOR DOORS AS REQ'D
3. CONC. SLAB, SEE PLAN FOR SUB-BASE & REINF.
4. #4 DOWELS x 36" @ 24" O.C.
5. #5 CONT. REBAR TYP. U.N.O.
6. #5 CONT. T&B (U.N.O.) SEE PLAN FOR NUMBER OF REBARS
7. #5 CONT. FOR EXTERIOR SIDEWALK
8. SIDEWALK, SEE PLAN FOR SUB-BASE & REINF.
9. CONC. CURB W/ #4 CONT. TYP. U.N.O. (WHERE OCCURS)
10. #4 @ 16" O.C. (V)
11. #4 @ 12" O.C. (H)

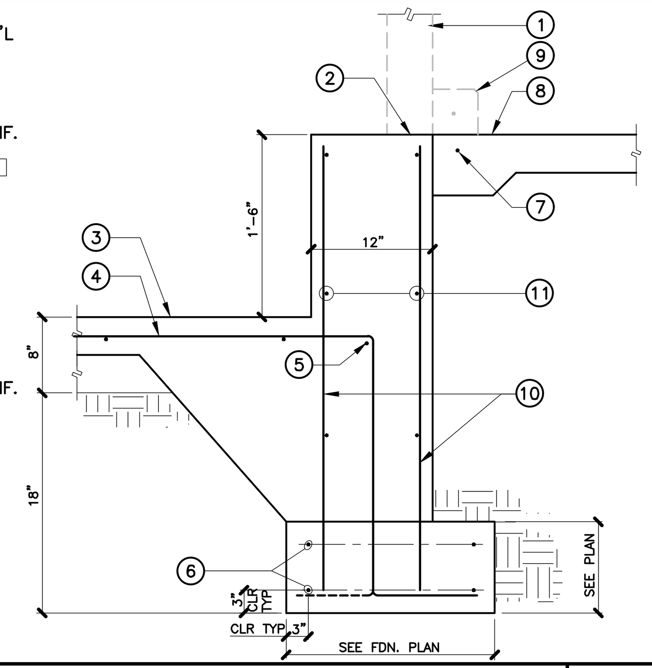

EXTERIOR POST FOOTING — 16
3110.DWG

1. 2x6 @ 16" O.C. TYP. U.N.O. W/2x PRESSURE-TREATED SILL PL. W/ 5/8"DIA A.B. x8"LG. @ 16" O.C. (9" FROM END) (WOOD POST AS OCCURS)
2. SIMPSON 'CB' WHERE WOOD POST OCCURS
3. CONC. SLAB SEE PLAN FOR SUB-BASE & REINF.
4. CONC. PEDESTAL W/ #4 DOWELS x L @ 12" O.C. ALONG PERIMETER #3 TIES @ 8" O.C. 2-#3 TIES @ 2" O.C. AT TOP
5. 1-#5 CONT. REBAR TYP. U.N.O.
6. #4 @ 24" O.C.
7. #4x 36" @ 24" O.C. (ALTERNATE BARS)
8. #4 CONT. @ CURB
9. 2x PRESSURE-TREATED SILL PL. W/ 5/8"DIA A.B. x10"LG. A.B. @ 48" O.C. (OR SEE SHEARWALL SCHED.)
10. 2x6 @ 16" O.C. TYP. U.N.O. (SEE PLAN AND/OR SHEAR WALL SCHEDULE FOR PLYWD)

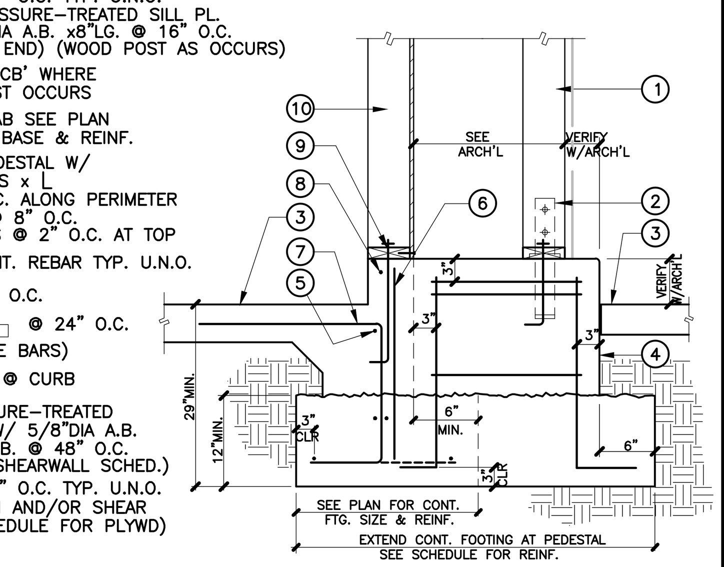

HOLDOWN — 12
3403.DWG

1. WOOD POST, SEE PLAN FOR SIZE & LOC.
2. 2x TRIMMER TYP U.N.O.
3. SIMPSON HOLDOWN SEE PLAN & SCHEDULE
4. DEEPEN FOOTING TO PROVIDE MINIMUM COVERAGE (EXTEND TO PROVIDE COVERAGE WHERE DOUBLE HOLDOWN OCCURS)
5. THREADED ROD WITH 2-SIMPSON BP PLATE AND DOUBLE NUTS *
6. OPTIONAL POUR
7. 2x P/T SILL PL. (3x PER SHEAR WALL SCHEDULE)
8. ANCHOR BOLTS & PL. SEE SHEAR WALL SCHED.
9. 2x6 @ 16" O.C. (3x PER SHEAR WALL SCHEDULE)

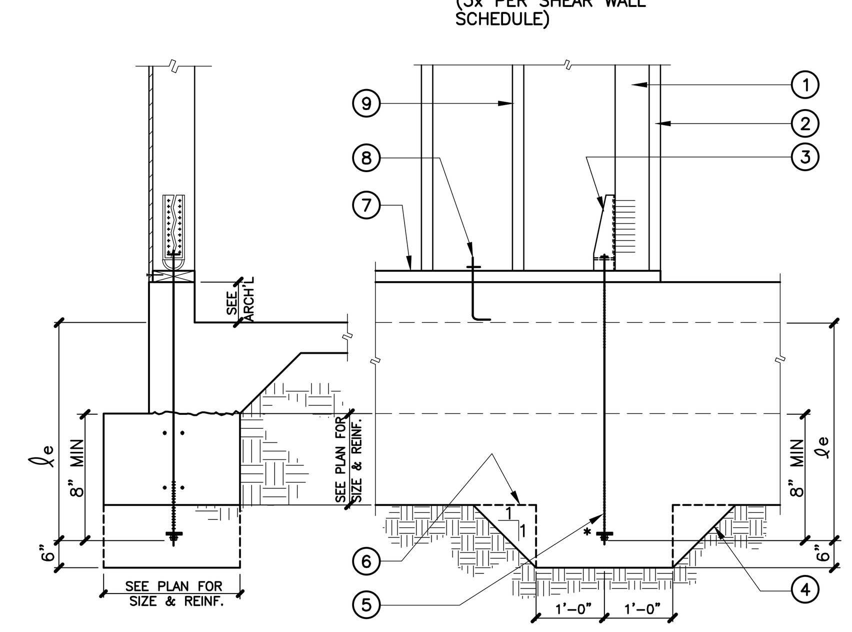

HOLDOWN SCHEDULE (ICC-ESR-2330)

HOLDOWN	SDS SCREW QUANTITY	ANCHOR BOLTS	ℓ_e	CAPACITY (6x6 POST)
HDU2	6-SDS 1/4"x2 1/2"	5/8"DIA.	14"	3075 lb
HDU4	10-SDS 1/4"x2 1/2"	5/8"DIA	14"	4565 lb
HDU5	14-SDS 1/4"x2 1/2"	5/8"DIA.	14"	5670 lb
HDU8	20-SDS 1/4"x2 1/2"	7/8"DIA.	20"	7870 lb
HDU11	30-SDS 1/4"x2 1/2"	1"DIA.	30"	9535 lb
HDU14	36-SDS 1/4"x2 1/2"	1"DIA.	30"	14445 lb

T&B REINF. @ STEPPED FTG. — 6
1010.DWG

1. FOR CONCRETE BLOCK WALLS STEP FOOTING IN 8" INCREMENTS AS NECESSARY TO CONSTRUCT A BLOCK WALL
2. FOOTING REBARS SHALL BE THE SAME AS SHOWN ON WALL FOOTING SECTION.
3. CONTRACTORS SHALL COORDINATE WITH ARCH'L & CIVIL DRAWINGS FOR LOCATION OF STEPPED FOOTINGS WHERE REQUIRED.

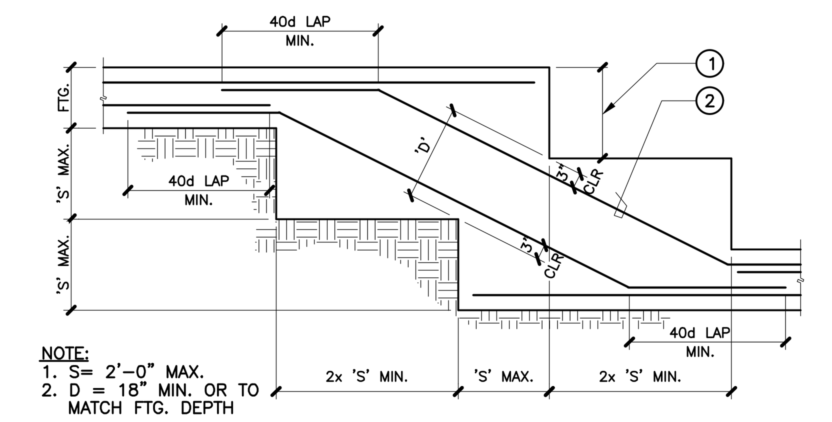

NOTE:
1. S= 2'-0" MAX.
2. D = 18" MIN. OR TO MATCH FTG. DEPTH

BAR BEND SPLICE DETAILS — 1
0701CBC.DWG

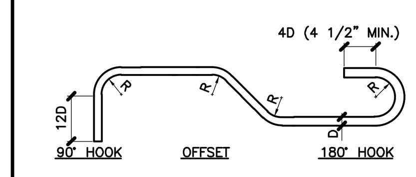

D = DIAMETER OF BAR
R = RADIUS BEND MEASURED ON THE INSIDE OF BAR
= 2 1/2 D FOR #2 ONLY
= 3D FOR #3 THROUGH #8
= 4 1/2 D FOR #9 THROUGH #11

LAP SCHEDULE OF REBARS IN CONCRETE

BAR	LAP LENGTH U.N.O. f"c=3000 psi TOP BARS	f"c=3000 psi OTHER BARS	f"c=4000 psi TOP BARS	f"c=4000 psi OTHER BARS	MASONRY * (f'm=1500PSI)
#3	28"	22"	25"	19"	18"
#4	38"	29"	33"	25"	24"
#5	47"	36"	41"	31"	30"
#6	56"	43"	49"	37"	36"
#7	81"	63"	71"	54"	42"
#8	93"	72"	81"	62"	48"
#9	105"	81"	91"	70"	–
#10	118"	91"	102"	79"	–

NOTES: (FOR REINF. CONCRETE ONLY)
1. TOP BARS ARE HORIZONTAL BARS WITH MORE THAN 12" OF CONC. CAST BELOW THE BARS.
2. BOTTOM BARS ARE ALL VERTICAL BARS AND HORIZONTAL WITH LESS THAN 12" OF CONCRETE CAST BELOW THE BARS.
3. CLEAR SPACING OF BARS SHALL BE EQUAL TO OR LARGER THAN $2d_b$
4. COVER OF BARS SHALL BE EQUAL TO OR LARGER THAN d_b UNLESS NOTED OTHERWISE.
5. FOR LIGHTWEIGHT CONCRETE MULTIPLY THE LENGTH IN SHEDULE BY 1.25

* PROVIDE 72d MIN. LAP FOR BASE OF MASONRY FENCE WALL AND MASONRY RETAINING WALL.

TYP. EXTERIOR WALL FOOTING — 23

1. 2x6 STUD @ 16" O.C. TYP. U.N.O.
2. 2x PRESSURE-TREATED SILL PL. W/ 5/8"DIA A.B. x10"LG MIN @ 32" O.C. (OR SEE SHEARWALL SCHED.)
3. CONC. SLAB, SEE PLAN FOR SUB-BASE & REINF.
4. #4x 36" @ 24" O.C. (ALT)
5. #5 CONT. REBAR T&B (U.N.O.) SEE SCHEDULE
6. #4 (V) @ 16" O.C.
7. #5 CONT. REBAR
8. SEE ARCH'L FOR SIDEWALK OR PAVING
9. SEE ARCH'L FOR FINISH AND SHEARWALL SCHED. FOR PLYWD. SHEATHING WHERE OCCURS
10. 2x BLOCKING @ MIDDLE-HEIGHT
11. #4@12" O.C. (H)

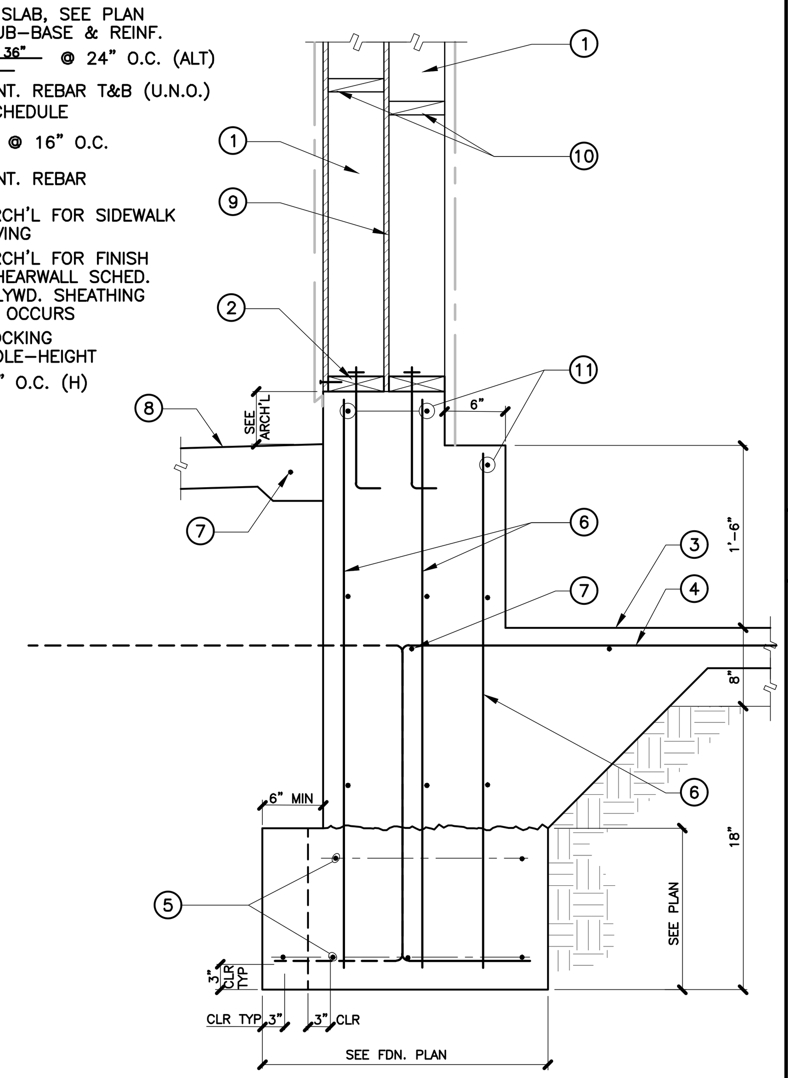

NOTES:
1. FOR STUD SIZE & PARTITION LOC. SEE ARCH'L DWGS.
2. FOR SHEARWALL PLYWOOD, SILL PL., BOLTS, ETC., SEE PLAN AND SCHEDULE
3. FOR BEARING WALLS, USE ANCHOR BOLTS ONLY.
4. 'D' = SEE GENERAL FOUNDATION NOTES, ITEM 4 ON SHEET ST0

EXTERIOR COL. FOOTING — 17

1. STEEL COL. SEE PLAN FOR SIZE & LOC.
2. COL. BASE SEE 10/ST1.
3. SIDEWALK AS OCCURS
4. CONC. PEDESTAL W/#4 @12" E.F. (4-#4 MIN.) VERT. & #3 TIES @ 6" O.C. (3-#3 TIES AT TOP @ 2" O.C.)
5. SEE PLAN FOR SHEARWALL LOC. & SCHED.
6. 2x6 STUD WALL @ 16" O.C. TYP. U.N.O.
7. 2x PRESSURE-TREATED SILL PL. W/ 5/8"ø x 10" LG. @ 48" O.C.
8. #4 @ 24" O.C.
9. #4x 42" @ 24" O.C.
10. CONC. SLAB SEE PLAN FOR SUB-BASE & REINF.

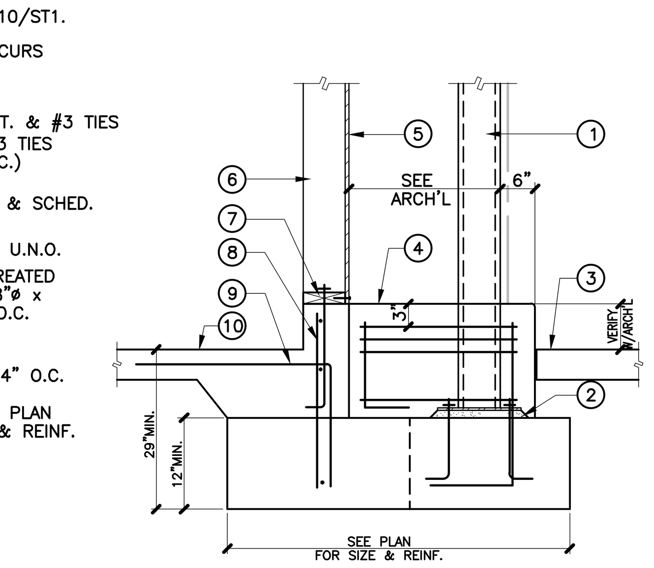

TYP. PIPE INSTALLATION AT FOOTING — 7
1006.DWG

1. BACK FILL COMPACT TRENCH PER SPEC'S AND SOIL REPORT
2. NO TRENCH PARALLEL TO FOOTING BELOW THIS LINE
3. NO PIPES SHALL PENETRATE FOOTING SYSTEM
4. PROVIDE SLEEVES FOR ALL PIPES
5. SEE NOTE 2 BELOW

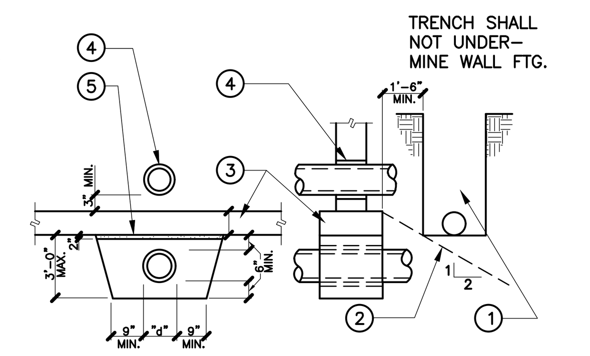

NOTES:
1. FOR PIPE MORE THAN 3'-0" BELOW BOTTOM OF FTGS., STEP FTGS. AS PER DETAIL 6/. NO PIPES ALLOWED IN FTG. STEM.
2. IF FTG. IS PLACED PRIOR TO PLACING PIPE, PLACE PIPE AND CONC. BELOW FTG. TO WITHIN 2" OF BOT. OF FTG. AND DRYPACK THE REMAINING 2".
3. PLACE CONC. FILL AROUND SLEEVE BEFORE POURING FTG. (FULL WIDTH OF FTG.).
4. ALL PIPE SLEEVES TO BE 2" LARGER THAN PIPE.

TYP. FRAMING AT WALL OPENING (10'-0" MAX.) — 2
3410.DWG

1. CRIPPLE STUDS @ 16" O.C.
2. LINTEL, SEE HEADER SCHD'L BELOW OR SEE PLAN
3. 1-2x TRIMMER MIN. FOR OPEN'G SMALLER THAN 4'-0" 2-2x TRIMMER FOR OPENING LARGER THAN 4'-0"
4. 2x SILL PL U.N.O. (PRESSURE TREATED)
5. CONCRE CURB, SEE ARCH'L
6. MUDSILL & ANCHOR BOLTS, SEE FDN. PLAN & ARCH'L
7. 2x SOLID BLK'G FOR 9'-0" HGT. AND OVER
8. DOUBLE STUD MIN. OR SEE PLAN
9. FRAMING ANCHORS
10. DOUBLE PL. (AS OCCURS)
11. 4x BLK'G W/ MST27 @ EA. SIDE OF THE OPEN'G

"d"	HEADER MAX. SPAN
6"	6'-0"
8"	8'-0"
10"	10'-0"

STUDS (U.N.O.)

SIZE	MAX. SPAN
2x4 @ 16" O.C.	14'-0"
3x4 @ 16" O.C.	14'-0"
2x6 @ 16" O.C.	20'-0"

CEILING JOISTS

SIZE	MAX. SPAN
2x4 @ 16" O.C.	8'-6"
2x6 @ 16" O.C.	14'-6"
2x8 @ 16" O.C.	19'-0"

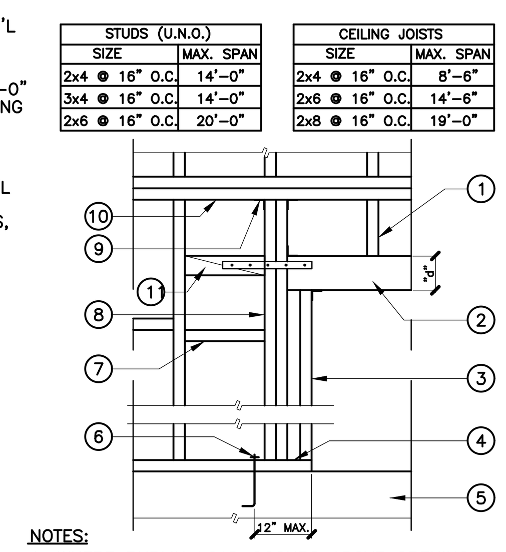

NOTES:
1. WHERE PURLIN LOAD OCCURS ABOVE OPENING, INCREASE LINTEL HEIGHT BY 2" MIN.
2. FOR PLYWOOD SHEATHING LOC. SEE FDN. PLAN

DETAIL — 18

1. PLYWOOD SEE PLAN
2. 2x6 STUDS @16" O.C.
3. E.N.
4. 3x6 STUD W/5/8"ø WELD STUDS @24" O.C.
5. HSS5x5x1/4 STL. COL. SEE PLAN
6. FINISH SEE ARCH'L

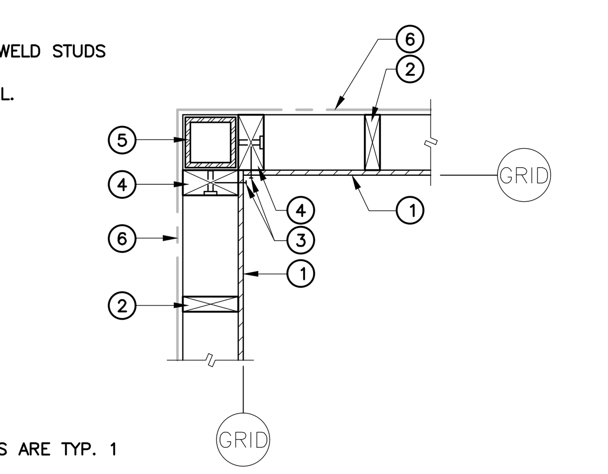

NOTES:
ALL UNMARKED WALLS ARE TYP. 1

SLAB AT STOREFRONT — 13
3120.DWG

1. STOREFRONT SEE ARCH'L
2. BLOCKOUT FOR DOORS AS REQ'D
3. CONC. SLAB, SEE PLAN FOR SUB-BASE & REINF.
4. #4 DOWELS x 36" @ 24" O.C.
5. 1-#5 CONT. REBAR TYP. U.N.O.
6. #5 CONT. T&B (U.N.O.) SEE PLAN FOR NUMBER OF REBARS
7. #5 CONT. FOR EXTERIOR SIDEWALK
8. SIDEWALK, SEE PLAN FOR SUB-BASE & REINF.
9. CONC. CURB W/ #4 CONT. TYP. U.N.O. (WHERE OCCURS)

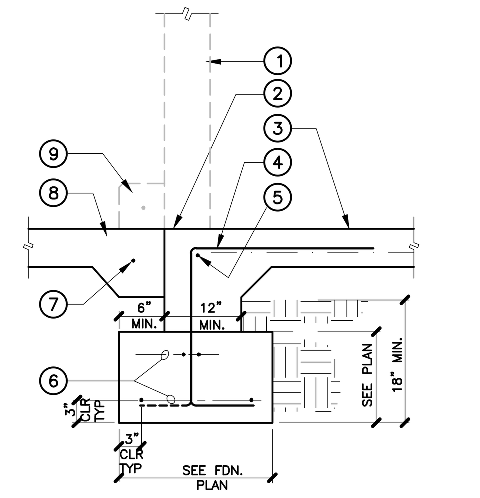

EXTERIOR COLUMN FOOTING — 8
5308.DWG

1. STEEL COL. SEE PLAN
2. PLYWD, SEE PLAN AND/OR SHEARWALL SCHEDULE
3. 25GA GALVANIZED SHEET METAL @ COL UNLESS REQUIRED ALL AROUND BY ARCH.
4. SIDEWALK, SEE PLAN FOR SUB-BASE & REINF. (WHERE OCCURS)
5. CONC. SLURRY MIN 6" E.W. TO PROTECT A.B. & PL.
6. SEE SCHEDULE 10/ST1 FOR BASE PL. & BOLTS
7. #5 BAR TYP.
8. CONC. SLAB, SEE PLAN FOR SUB-BASE & REINF.
9. 2'-6" MIN. POUR AFTER COL. ERECTION
10. STOP SILL PL @ COL. SEE SHEARWALL SCHED.
11. STUD BOLTS FOR PARTITION TRIMMER

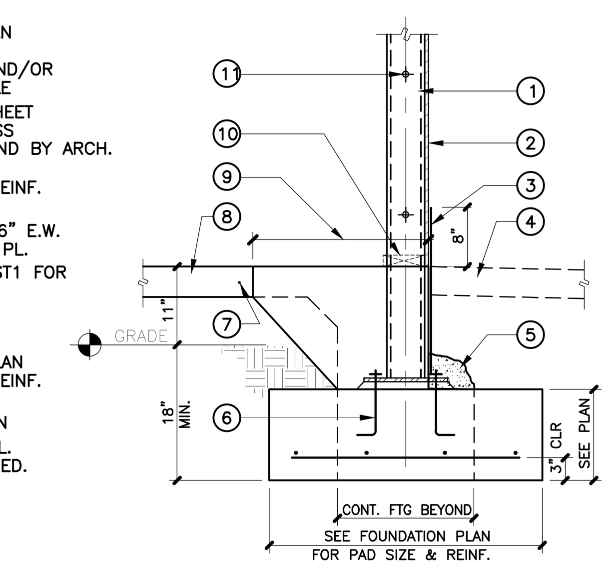

NOTES:
T1 = CONC SLAB THICKNESS + SUB BASE (SEE PLAN AND/OR SLAB SCHED. ON SHEET S1.0)
T2 = MINIMUM EMBEDMENT PER "GENERAL FOUNDATION NOTES" ITEM #4 ON SHEET ST0

STUDWALL AT OPENING — 3
3424.DWG

1. FOR FINISH SEE ARCH'L FOR PLYWD. SEE SHEARWALL SCHED.
2. 2x6 STUD @ 16" O.C. TYP. U.N.O.
3. HOLDOWN SEE PLAN
4. 2x TRIMMER
5. 6x6 WOOD POST U.N.O.
6. 2x NAILER W/ 5/8"ø WELD STUD @ 48" O.C.
7. TS COL SEE PLAN
8. 3x NAILER W/ 5/8"ø" WELD STUD (C.S.) @ 24" O.C.
9. BOUNDARY NAILING

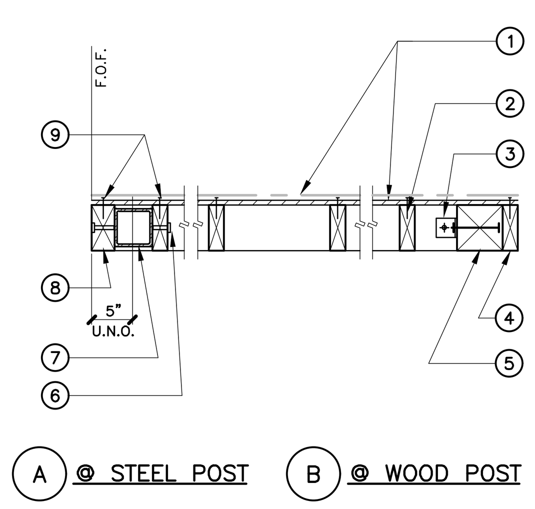

(A) @ STEEL POST (B) @ WOOD POST

SHEARWALL ELEVATIONS — 20
3428.DWG

1. STRAP TIE AS OCCURS, EA. SIDE SEE PLAN
2. HI BEAM SEE PLAN
3. 2x6 STUDS @ 16" O.C.
4. A.B. SEE SHEARWALL SCHEDULE
5. 3x TRIMMER W/5/8"ø WELD STUD @24" O.C.
6. 4x OR 6x END POST. SEE PLAN OR HOLDOWN SCHEDULE
7. BLOCKING AS REQUIRED
8. HDR. BM. SEE PLAN
9. SIMPSON CMST12 COIL STRAP U.N.O.
10. 4x BLOCKING AT STRAP
11. PLYWOOD SHEATHING SEE PLAN
12. PAD FTG. AT COL. SEE PLAN
13. SHEAR WALL PANEL SEE PLAN & SCHEDULE WHERE OCCURS
14. HI BEAM -SEE 19/ST2 FOR SAME SIZE BEAMS -SEE 20/ST2 FOR DIFF. SIZE BEAMS
15. SIMPSON CC, COLUMN CAP
16. SIMPSON 'HH' HEADER HANGER
17. STEEL COL. SEE PLAN
18. SIMPSON HOLDOWN SEE DETAIL 12/ST1
19. CONT. FTG. SEE PLAN
20. 1-5/8"ø WELD STUD

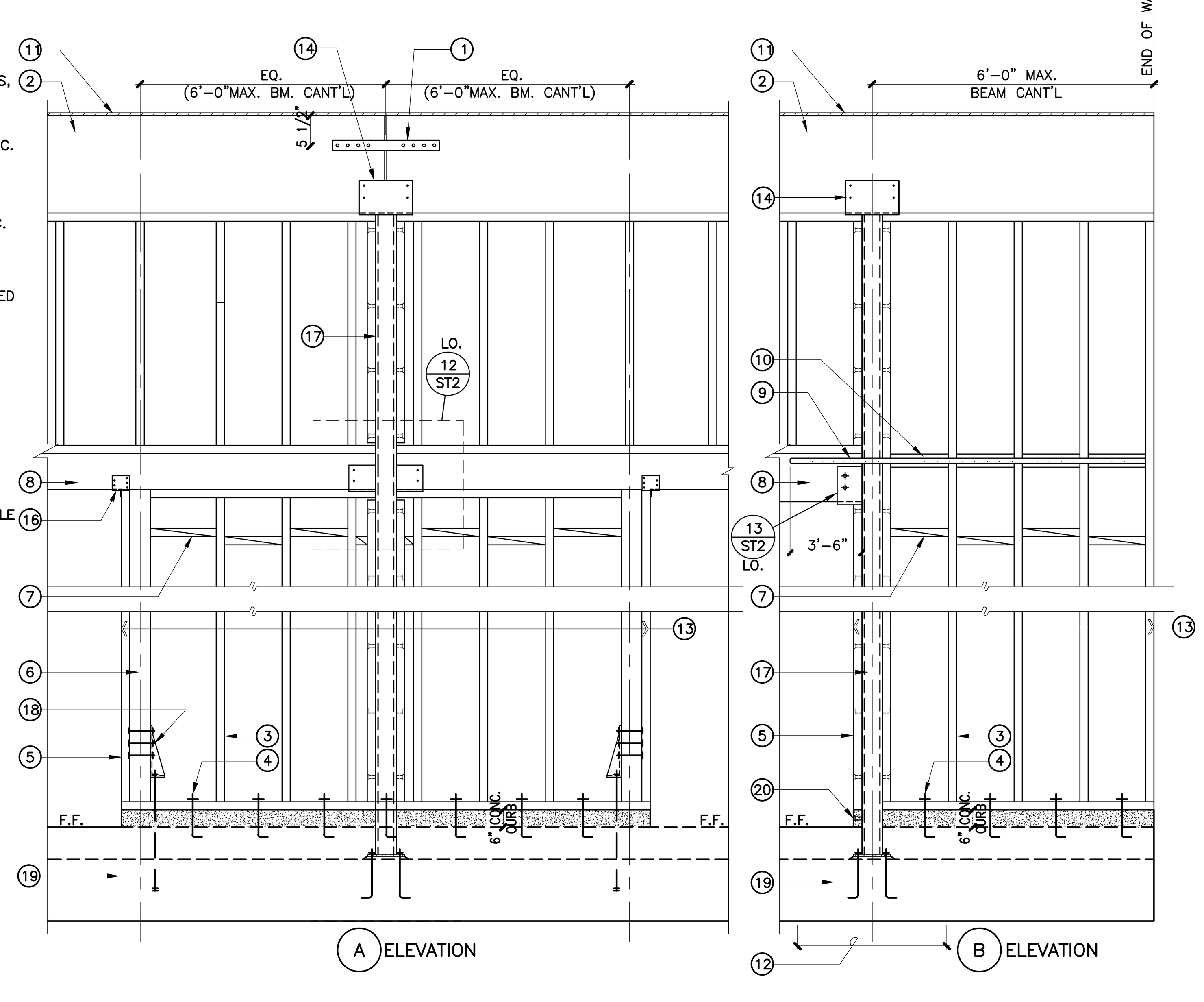

(A) ELEVATION (B) ELEVATION

TYP. EXTERIOR WALL FOOTING — 14
3112.DWG

1. 2x6 STUD @ 16" O.C. TYP. U.N.O.
2. 2x PRESSURE-TREATED SILL PL. W/ 5/8"DIA A.B. x10"LG MIN @ 48" O.C. (OR SEE SHEARWALL SCHED.)
3. CONC. SLAB, SEE PLAN FOR SUB-BASE & REINF.
4. #4x 36" @ 24" O.C. (ALT)
5. #5 CONT. REBAR T&B (U.N.O.) SEE SCHEDULE
6. #4 (V) @ 18" O.C.
7. #5 CONT. REBAR
8. SEE ARCH'L FOR SIDEWALK OR PAVING
9. SEE ARCH'L FOR FINISH AND SHEARWALL SCHED. FOR PLYWD. SHEATHING WHERE OCCURS
10. 2x BLOCKING @ MIDDLE-HEIGHT

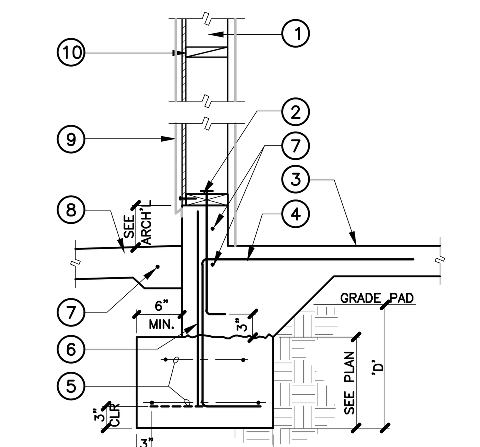

NOTES:
1. FOR STUD SIZE & PARTITION LOC. SEE ARCH'L DWGS.
2. FOR SHEARWALL PLYWOOD, SILL PL., BOLTS, ETC., SEE PLAN AND SCHEDULE
3. FOR BEARING WALLS, USE ANCHOR BOLTS ONLY.
4. 'D' = SEE GENERAL FOUNDATION NOTES, ITEM 4 ON SHEET ST0

TYP. INTERIOR FOOTING — 15
3123.DWG

1. SEE ARCH'L FOR FINISH AND SHEARWALL SCHED. FOR PLYWD. SHEATHING WHERE OCCURS
2. 2x6 STUD @ 16" O.C. TYP. U.N.O.
3. 2x SILL PL. W/ HILTI X-CP72 P8 S23 (0.145DIAx 2 7/8" LONG W/ WASHER @ 32" O.C.) ESR-2379
4. CONC. SLAB, SEE PLAN FOR SUB-BASE & REINF.

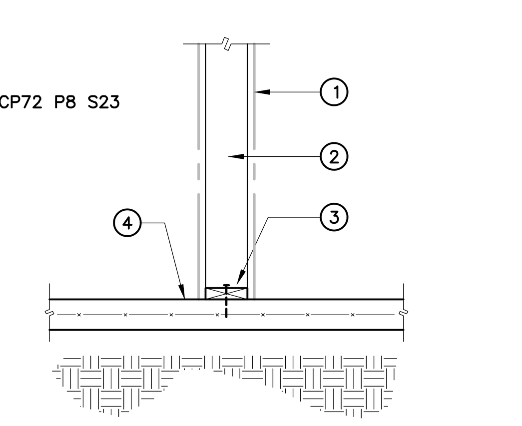

COLUMN FOOTING — 10
0719.DWG

1. FLOOR SLAB JOINT AS REQUIRED, SEE PLAN
2. 2'-0" SQ. POUR AFTER COL ERECTION
3. BASE PL. AND BOLTS SEE SCHED. (THIS DETAIL) OVER LEVELING NUT AND 1 1/2" DRYPACK
4. #5 BAR TYP.
5. CONC. SLAB, SEE PLAN FOR SUB-BASE & REINF.
6. NELSON STUD BOLT TO CONN. WOOD STUDS SEE ARCH'L PLAN
7. STEEL COL. SEE FDN PLAN FOR SIZE & LOC.

COLUMN	BASE PL.	ANCHOR BOLT
HSS5x5	12"x12"x1"	4-3/4"ø

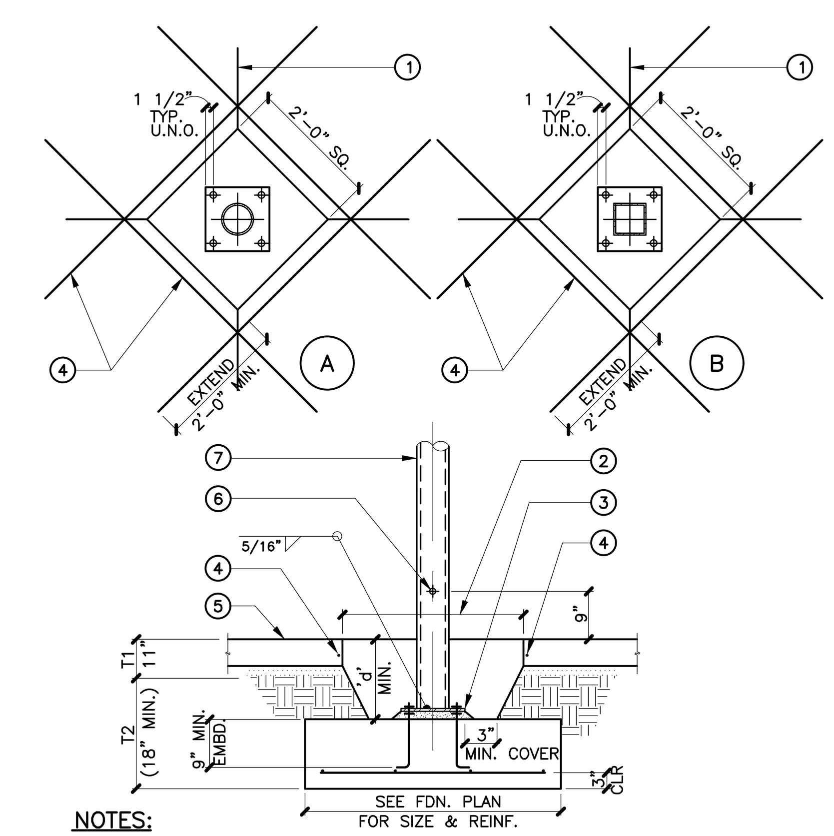

NOTES:
d = T1+T2-FTG. THK. (MIN. 14")
T1 = CONC SLAB THICKNESS + SUB BASE (PER FOUNDATION PLAN)
T2 = MINIMUM EMBEDMENT PER FOUNDATION NOTES ON SHEET ST0

FLOOR SLAB JOINTS — 4
1001.DWG

1. CONC. SLAB, SEE PLAN FOR SUB-BASE & REINF.
2. 5/8" DIA.x 16" LG. SMOOTH DOWEL @ 24" O.C., WRAP OR GREASE ONE END.
3. SAWCUT OR PLASTIC JOINT SEE SPECS. (SLAB SHALL BE SAWCUT FOR CONTROL JOINTS AFTER *INITIAL CONCRETE HARDENING)

*6 TO 12 HOURS AFTER PLACING OF CONCRETE

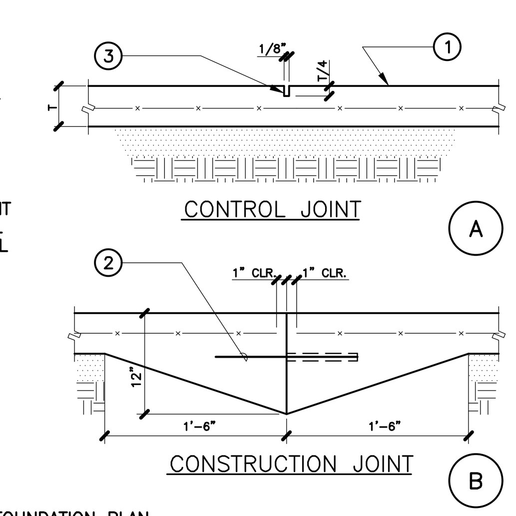

(A) CONTROL JOINT
(B) CONSTRUCTION JOINT

NOTE:
FOR SLAB AND BASE SEE FOUNDATION PLAN & SPECIFICATIONS.
SPACE ALL JOINTS @ 12'-0"± O.C. MAX.
SEE FOUNDATION PLAN.
1/2" PREMOLDED JOINT FILLER @ 5'-0" O.C. MAX. @ WALKWAY, SEE ARCH'L.

SLAB EDGE & DEPRESSION — 5
1003.DWG

1. 1-#4 CONT.
2. SEE PLAN FOR SLAB
3. ADD 1-#4 @ DOCK RAMP
4. SEE ARCH'L FOR LOC., DEPTH & SIZE OF DEPRESSION
5. 12" WIDE @ END OF LOADING DOCK RAMP
6. FOR ELEV. SEE GRADING PLAN
7. SEE ARCH'L PLAN

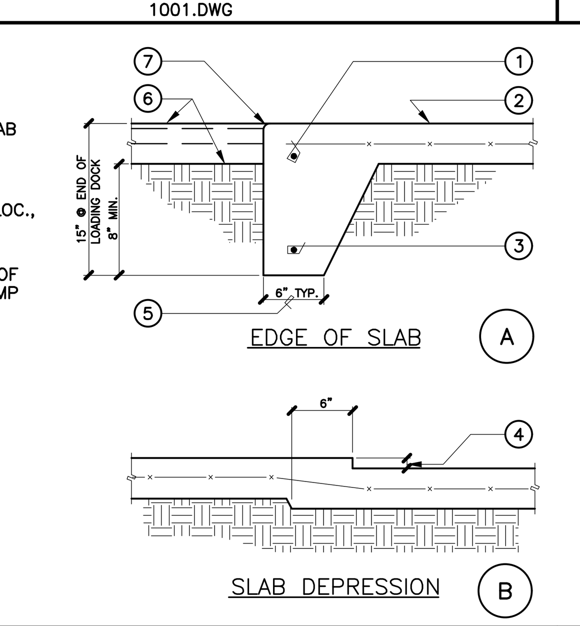

(A) EDGE OF SLAB
(B) SLAB DEPRESSION

ktgy

17911 Von Karman Ave.
Suite 200
Irvine, CA 92614
ktgy.com
949.851.2133

ktgy Project Number
Contact DORINA WATSON
Email dwatson@ktgy.com
Senior Director DAVID SCHMITZ
Designer RUSSEL ROSALES

Developer
SEDC
23906 SOBOBA ROAD
SAN JACINTO, CA 92581

PHONE: (951) 663-2058

SOBOBA SOVOVATUM VILLAGE PHASE-2

- SAN JACINTO, CA

No.	DATE	DESCRIPTION
	5/22/2026	FOR BID

Client is responsible for notifying architect in writing for any discovered errors or omissions in the plans and specifications during construction of the project. Failure for Client to notify Architect of any known errors or omissions in the plans or specifications, and proceeding with constructing the portion of work shown in the plans or specifications known containing errors or omissions shall be a waiver by Client for any liability of Architect for such known errors or omissions. Client releases Architect for any liability for such portions of work, and Architect shall not be liable for any delay damages, change orders, repair costs, removal or demolition costs, or replacement of any such portions of work.

REGISTERED PROFESSIONAL ENGINEER ANDY M. YU NO. C27612 EXP. 12-31-27 CIVIL STATE OF CALIFORNIA

ANF & ASSOCIATES
Consulting Structural Engineers
T: (626) 448-8182
F: (626) 448-8092
E: anf1688@anfstructural.com
JOB# 025817.11
923 East Valley Blvd., Suite 268, San Gabriel, CA 91776

2026-05-26, ISSUED FOR BID

Sheet_Name

FOUNDATION DETAILS

ST1

Printed : 1/7/2026 4:29:06 PM

COPYRIGHT 2024 KTGY GROUP INC. These plans and specifications are protected by United States copyright law and may not be used, reproduced, distributed, transmitted, displayed, or modified in any way without the prior written consent of KTGY Group, Inc. or the authorized copyright holder or licensee.

1. ℄ BEAM SPLICE & COL.
2. 11" FOR CONT. BEAM
3. 1/4" THK. SIDE PLATES W/4–3/4"ø M.B.
4. 5/8" THK.x WIDTH OF BEAM + 1 1/2" BEARING PL.
5. STEEL COLUMN SEE PLAN
6. GLULAM BEAM/WOOD BEAM SEE PLAN

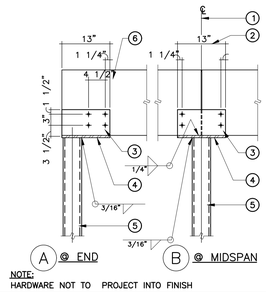

NOTE:
HARDWARE NOT TO PROJECT INTO FINISH

BEAM TO STEEL COLUMN CONN. 21
4202.DWG

1. TRUSS/GLB PURLIN PER PLAN
2. 4'–0" SQ. MAX. OPENING, SEE PLAN
3. 8"ø MAX. HOLE THRU PLYWD. SHEATHING
4. 2x6 SUB–PURLINS @24" O.C.
5. BOUNDARY NAILING FOR PLYWOOD TYPICAL AROUND OPENING
6. 2–2x6 EA. SIDE OF OPENING IN SIMPSON 'U' HANGERS

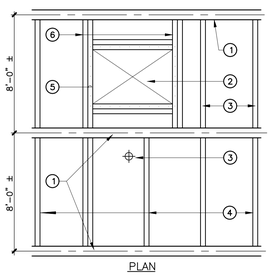

TYPICAL ROOF OPENING 16
4513.DWG

1. STEEL COL. CONT. TO ROOF
2. LOW BEAM SEE PLAN
3. 1/2"THK BACK PL.
4. ROOF BEAM SEE PLAN
5. 2x CONT TOP PL.
6. PLYWOOD SHEATHING SEE PLAN
7. 5/8"DIA STUD BOLTS @ 24" O.C. MAX.
8. 1/2"THK. BEARING PL. DAT INTO BEAM AS REQUIRED
9. 2 ROWS B.N. STAGGERED
10. 2x STUDS @ 16" O.C.
11. 10d @ 2" O.C. NAILING
12. SEE DETAIL 19 /ST2 OR 20/ST2 FOR BEAM CONN AT COL.
13. 1/4"THK. PL W/ 2–3/4"DIA BOLTS. (DAF INTO BEAM)
14. STRAP TIE, SEE PLAN
15. 2x CONT SILL PL. W/ 16d @ 4" O.C.

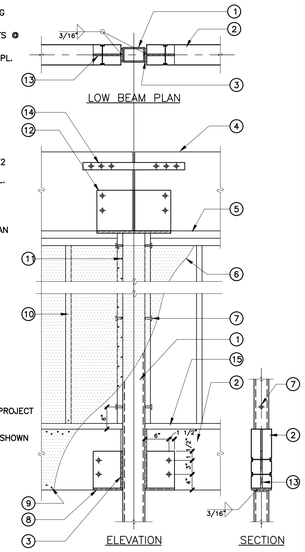

NOTES:
1. HARDWARE NOT TO PROJECT INTO ARCH'L FINISH WHERE OCCURS.
2. PARAPET WALL NOT SHOWN

HEADER CONN. TO STL COLUMN 12
9502.DWG

1. PLYWOOD SHEATHING SEE FRAMING PLAN
2. SIMPSON "F" SERIES HANGER U.N.O.
3. OPEN WEB WOOD TRUSS SEE PLAN FOR SIZE & SPACING
4. 2x OR 4x WOOD JOIST WHERE OCCURS SEE FRAMING PLAN
5. BOUNDARY NAILING

RAFTER SIZE DEPTH "H"	HANGER CONN
2x6	HF26N
2x4	HF24N
3x4 , 3x6	HF34N , HF36N
4x6	W46 OR WOOD SADDLE HGR
2x8	W28
4x8,4x10,6x10	W86 OR WOOD SADDLE HGR

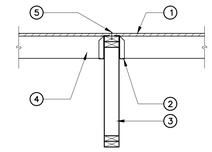

ROOF JOIST CONN. AT WOOD TRUSS 6
4710.DWG

1. TYPICAL INTERMEDIATE NAILING
2. JOIST OR TRUSS SEE PLAN
3. DIRECTION OF FACE GRAIN
4. PROVIDE 2x FLAT BLK'G @ 48" O.C. IN SIMPSON "Z" CLIP HANGERS (U.N.O.)
5. PLYWOOD 4'–0"x 8'–0" SHEETS TYP.
6. STAGGER JOINTS TYP.
7. TYP. EDGE NAILING (STAGGER NAILING @ ADJACENT PANELS)

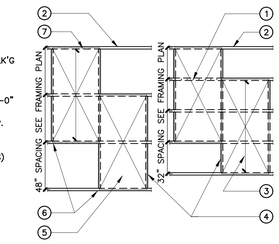

NOTES:

1. ALL PLYWOOD SHAL BE 3/4" THK. PLYWOOD BEARING STAMP DOUGLAS FIR STR. 1 INDEX 48/24. PLYWOOD BY APPROVED GRADING AGENCY. GLUE SHALL BE EXTERIOR TYPE. PLYWOOD SHALL CONFORM TO PRODUCT STANDARD PS–1–83.
2. LAY PLYWOOD SHEETS W/LONG DIMENSIONS PERPENDICULAR TO TRUSSES – AS SHOWN. (FACE GRAINS PERPENDICULAR TO JOISTS).
3. SPACE ALL NAILS 3/8" MIN. FROM PANEL OR SUPPORTING MEMBER EDGE. NAILS TO PENETRATE SUPPORTING MEMBER BY 1 5/8 MIN. USE 10d COMMON NAILS.
4. BUILDING DEPARTMENT INSPECTION REQUIRED ON THE ROOF SYSTEM LAYOUT AND NAILING, PRIOR TO PLACING ANY MATERIAL ON ROOF, OR SUSPENDING LOAD.
5. SEE ARCHITECTURAL PLANS TO ESTABLISH TOP OF SHEATHING ELEVATION, COLUMN HEIGHTS, WALL HEIGHTS, ETC..
6. INSTALLATION OF SHEATHING SHALL NOT COMMENCE PRIOR TO SECURELY NAILING & SUPPORTING ALL HORIZONTAL FRAMING MEMBERS.

PLYWOOD FRAMING LAYOUT 2

1. ℄ BEAM SPLICE & COL.
2. 11" FOR CONT. BEAM
3. SIMPSON 'CC' COLUMN CAP
4. WOOD POST SEE PLAN
5. SEE PLAN FOR BEAM SIZE & LOC.
6. SIMPSON 'ECC' COLUMN CAP

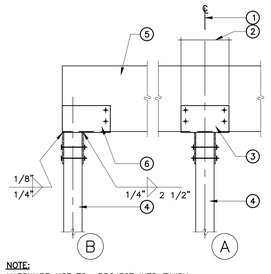

NOTE:
HARDWARE NOT TO PROJECT INTO FINISH

BEAM TO WOOD POST CONN. 22
4201.DWG

1. RTU PER PLAN & MECHANICAL DWGS
2. 4x8 MIN. CONT. SHAPED TO FIT ROOF SLOPE WITH TOP LEVEL UNDER A/C CURB (4 SIDES) W/1/2"ø LAG SCREW (3" EMBED) @32" O.C. (C.S.) MAX. & 12" FROM END MAX. (3–SCREWS PER SIDE MIN.)
3. 4x10 UNDER A/C CURB IN 'HU' HANGERS EA. END
4. TRUSS BEYOND SEE PLAN FOR SIZE AND SPACING
5. 2x ROOF JOISTS BEHIND SEE FRAMING PLAN
6. SEE MECHANICAL DWG. (9/M3.0) FOR CONNECTION OF RTU TO A/C CURB
7. A/C CURB (14" DEEP) W/#12 WD SCREW TO 4x10 @16"O.C. MAX. & @8" MAX. FROM CORNERS
8. SIMPSON 'HUCQ' HANGER TYP.
9. 3/4" STRUCTURAL I PLYWOOD SHEATHING W/10d @6,6,12 O.C.
10. 2x6 @16" O.C. SEE 16/ST2 FOR TYPICAL OPEN'G DETAIL

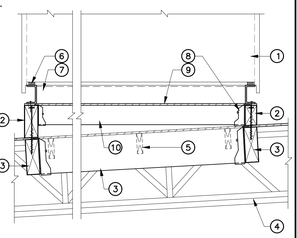

TYPICAL RTU SUPPORT 17
5035.DWG

1. BLK'G OR SEE PLAN W/EDGE NAIL'G (E.N.) HORIZONTAL EDGE OF PLYWOOD CAN BE ON THE SAME HORIZONTAL LINE.
2. SILL BOLTS SEE SCHED.
3. HOLDOWN ANCHOR (WHERE OCCURS)
4. CONT. SILL PL.
5. 2x STUDS @ 16" O.C. W/ INTERMED. NAIL'G @ 12", SAME SIZE AS E.N.
6. 2x TRIMMER
7. 3x (MIN) POST W/ BOUNDARY NAIL'G (B.N.)
8. DOUBLE TOP PL. W/ BOUNDARY NAIL'G (B.N.)

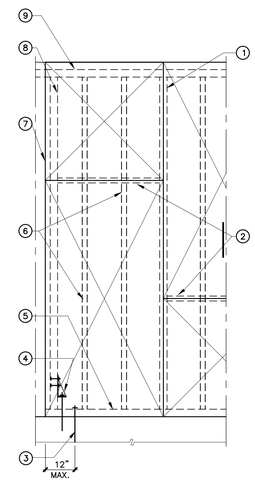

NOTES:
1. MIN. EDGE DISTANCE FOR NAILS SHALL BE 3/8"
2. PLYWOOD FACE GRAIN MAY BE HORIZ. OR VERT.
3. SEE PLAN FOR LOCATION OF PLYWOOD SHEATHING
4. SEE SHEAR WALL SCHEDULE ON 4/S1.0 FOR ADDITIONAL INFORMATION

PLYWOOD SHEATHING WALL 14
3415.DWG

1. BOUNDARY NAILING (2 ROWS @ GLB)
2. SIMPSON 'MST48'
3. WOOD TRUSS, SEE PLAN FOR SIZE & SPACING
4. SIMPSON 2 5/16"x 12GA. GALV. VB KNEE BRACE INSTALL PER MFR. CO. SPECIFICATIONS
5. GLULAM BEAM SEE PLAN FOR SIZE & LOCATION
6. 2–N54A NAILS @ SEAT
7. 1–N54A NAILS EA SIDE
8. WOOD TRUSS BLOCKING
9. PLYWOOD SHEATHING SEE FRAMING PLAN
10. 1 1/2" LT. WT. & UNDERLAYMENT TOPPING, SEE ARCH'L

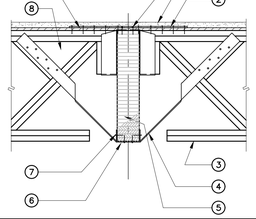

WOOD TRUSS CONN. AT GLB 7
4702.DWG

1. FINISH, SEE ARCH'L
2. PLYWOOD SHEATHING SEE FRAMING PLAN
3. SIMPSON TRUSS CLIP 'DTC' @ 48" O.C.
4. ROOF JOIST SEE PLAN IN 'W' HGRS. @ PARTITION
5. WOOD TRUSS, SEE PLAN FOR SIZE & SPACING
6. 2–2x CONT. PL.
7. FOR STUD SIZE & SPACING, REFER TO ARCH'L DWGS.
8. ROOF JOIST SEE PLAN FOR SIZE & SPACING
9. 2x BLOCKING @ 48" O.C. IN 'HU' HANGERS

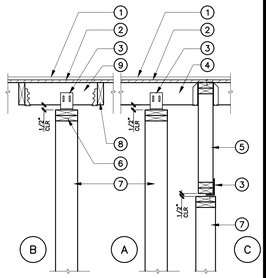

NON–BEARING PARTITION TO ROOF 3
4741.DWG

1. 2x BLOCKING THRU
2. 2–2x6 BLOCKING BETWEEN STUDS @ TRUSS LOC.
3. 4x6 STUDS UNDER TRUSS @ 48" O.C.
4. 2x6 STUDS @ 16" O.C. FULL HEIGHT PL. TO PL.
5. 3x12 CONT. W/3–20d IN PRE–DRILLED HOLES W/ SIMPSON 'MST48' @ EA. SPLICE OR SEE PLAN (BEYOND)
6. OPEN WEB TRUSS, SEE PLAN
7. 3x OR 2 1/2x GLU–LAM FULL HT. BLK'G IN OFFSET HANGER EA END. (BEYOND)

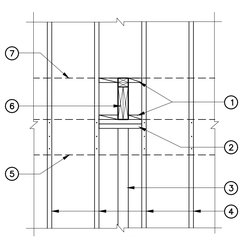

ELEVATION

WOOD TRUSS TO WALL CONN. 23
4662.DWG

1. 1/2" PLYWOOD W/ 10d @ 6; 12; O.C.
2. 2x6 STUDS @ 16" O.C. TYP. U.N.O.
3. FOR FINISH SEE ARCH'L
4. BOUNDARY NAILING
5. 4x OR 6x UNDER WALL SEE FRAMING PLAN
6. PLYWOOD SHEATHING SEE PLAN
7. 2x SILL PL. W/ 16d @ 4" O.C.
8. 2x OR 4x @16"O.C. UNDER WALL SEE PLAN
9. ADD 4x BLOCKING TYP UNDER WALL

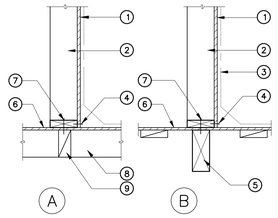

CRIPPLE WALL @ ROOF 18
5018.DWG

1. BOUNDARY NAILING (2 ROWS @ GLB)
2. SIMPSON 'MST48'
3. WOOD TRUSS, SEE PLAN FOR SIZE & SPACING
4. SIMPSON "HGLT" HANGER
5. GLULAM BEAM SEE PLAN
6. PLWD. SHEATHING SEE FRAMING PLAN
7. 1 1/2" LT. WT. & UNDERLAYMENT TOPPING, SEE ARCH'L

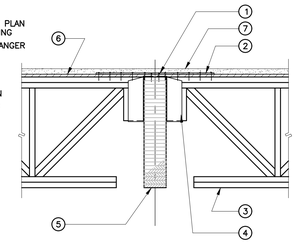

BRACE AT WOOD TRUSS/GLB CONN. 8
4703.DWG

1. FINISH, SEE ARCH'L
2. 2–2x CONT. TOP PL.
3. 2x BLOCKING
4. 2x6 @ 16" O.C. TYP U.N.O.
5. PLYWD. SHEATHING SEE FRAMING PLAN
6. 2x CONT. SILL PL W/ 16d @ 4" O.C. & B.N. (SHAPED TO FIT) W/ SIMPSON A35 & H2.5 @ 16 O.C.
7. ADD 4x UNDER BRACE TYP. SEE PLAN
8. WOOD TRUSS, SEE PLAN FOR SIZE & SPACING
9. 2x6 BRACE @ 48" O.C. W/ 4–16d EA. END TYP AT ALL WALL OPEN'GS LARGER THAN 30" & TYP AT ALL FULL HT WALLS EXCEPT WHERE ROOF SHEAT'G IS LESS THAN 16' HIGH
10. 3x4 JOIST U.N.O. IN FIRST BAY @ 48" O.C. IN SIMPSON "F" HANFER E.S.
11. BOUNDARY NAILING
12. 6x CONT. TOP CHORD W/ SIMPSON 'MST37' EA. SIDE @ SPLICE
13. 2x CONT PL W/ 16d @ 8" O.C.
14. 2x BLK'G @ CEILING LINE
15. 2x6 STUDS @ 16" O.C. FULL HEIGHT PL. TO PL. SEE SHEARWALL SCHEDULE WHERE 3x STUDS OCCUR MIN @ PLYWD EDGE
16. FINISH, SEE ARCH'L
17. 2x BLOCKING @ 9'–0" O.C. MAX.
18. PLYWOOD FULL HEIGHT WHERE SHOWN ON PLANS
19. MFR. PRECUT 2x FLAT BLOCKING @ 48 O.C. IN SIMPSON "Z" CLIP HGRS.

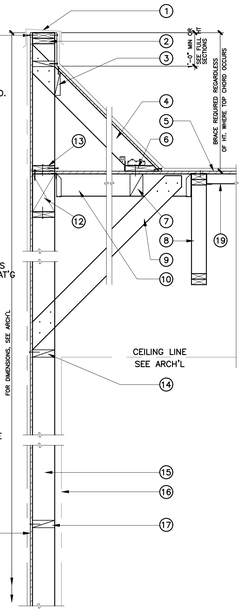

JOIST TO STUDWALL CONN. 10
4625.DWG

NOTE:
SEE DETAIL 23
THIS SHEET FOR
BEAM TO WALL CONN.

1. FOR CAP SEE ARCH'L
2. 2–2x CONT. TOP PL.
3. PLYWOOD SHEATHING & WALL FINISH SEE ARCH'L
4. SIMPSON 'H25' & 'A35' FLAT @ 16" O.C., SEE PLAN VIEW
5. 3x BLOCKING IN OFFSET HANGER EA. END
6. PLWD. SHEATHING SEE FRAMING PLAN
7. WOOD TRUSS, SEE PLAN FOR SIZE & SPACING
8. ROOF JOIST, SEE PLAN FOR SIZE & SPACING
9. 2x BLOCKING @ 48" O.C. IN 'HU' HANGERS
10. SIMPSON 'A34N' FLAT ANCHOR @ 24" O.C. U.N.O.
11. 2x CONT. BLOCKING T&B
12. 3x12 CONT. W/3–20d IN PRE–DRILLED HOLES W/ SIMPSON 'MST37' @ EA. SPLICE OR SEE PLAN
13. 2x6 BRACE @ 48" O.C. W/ 4–16d EA. END TYP AT ALL WALL OPEN'GS LARGER THAN 30" & TYP AT FULL HT WALLS EXCEPT WHERE ROOF SHEATH'G IS LESS THAN 16' HIGH
14. 2–2x6 BLOCKING BETWEEN STUDS @ TRUSS LOC.
15. 2x6 BLOCKING @ CEILING LINE
16. 2x6 STUDS @ 16" O.C. FULL HEIGHT PL. TO PL. SEE SHEARWALL SCHEDULE WHERE 3x STUDS OCCUR MIN @ PLYWD EDGE
17. FINISH, SEE ARCH'L
18. 2x BLOCKING @ 9'–0" O.C. MAX.
19. PLYWOOD FULL HEIGHT WHERE SHOWN ON PLANS
20. 2–2x6 STUDS BELOW EA TRUSS' SEAT
21. SIMPSON 'A35' @ 16" O.C.
22. BOUNDARY NAILING
23. CONTINUOUS EDGE NAILS
24. BRACE AS OCCURS, SEE PLAN AND/OR DETAIL XX/XX

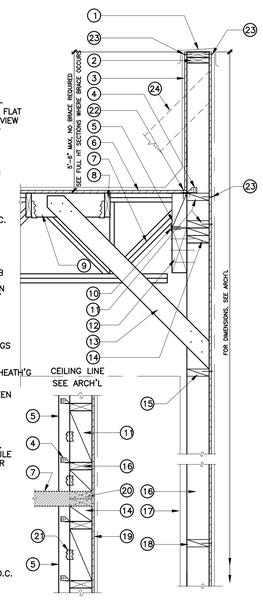

WOOD TRUSS TO WALL CONN. 5
4654.DWG

1. ℄ BEAM SPLICE & COL.
2. 11" FOR CONT. BEAM
3. SIMPSON 'CC' COLUMN CAP
4. WOOD POST SEE PLAN
5. SEE PLAN FOR BEAM SIZE & LOC.
6. SIMPSON 'ECC' COLUMN CAP

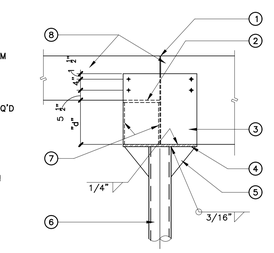

COL. CAP WHERE BEAMS ARE SKEWED IN PLAN

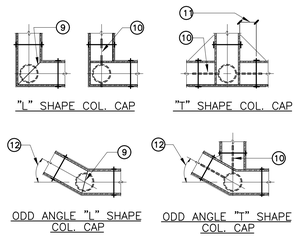

"L" SHAPE COL. CAP
"T" SHAPE COL. CAP
ODD ANGLE "L" SHAPE COL. CAP
ODD ANGLE "T" SHAPE COL. CAP

NOTE:
1. EXTEND COLUMN CAP PLATES TO PERMIT INSTALLATION OF BOLTS
2. THE DISTANCE FROM BOLTS TO END OF BEAM SHALL BE 7ø OF THE BOLT MIN. TYP.

COLUMN CAPS W/SKEWED BEAMS 25
4207.DWG

1. ℄ OF COLUMN
2. GLULAM BEAM SEE PLAN FOR SIZE & LOCATION
3. STRAP TIE CENTERED WHERE REQUIRED ON PLANS
4. 5/8" THK.x WIDTH OF GLULAM BEAM + 1 1/2" BEARING PL.
5. STEEL COLUMN SEE PLAN
6. 1/4" THK. SIDE PL. E.S. OF GLULAM BEAM W/ 4–3/4"DIA BOLTS
7. WHERE END OF BEAM OCCURS STOP SIDE PL (2 BOLTS ONLY)
8. SPLICE BEAM WHERE SHOWN ON PLANS

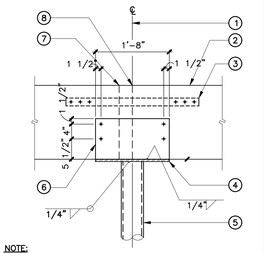

NOTE:
1. FOR BEAMS OF DIFFERENT THICKNESS, SHIM NARROWER BEAM EACH SIDE AS REQUIRED.
2. SLOPE COLUMN CAP TO MATCH ROOF SLOPE. DO NOT NOTCH BEAM.

TYPICAL COLUMN CAP 19

1. DAP TOP PL. INTO BEAM
2. HC4C3TA–5–9
   BEAM WIDTH
   BEARING LENGTH
3. CARRYING BEAM
4. DROP IN BEAM

NOTE: FOR BEAMS OF DIFF. WIDTH SHIM NARROWER BEAM EACH SIDE AS REQUIRED.

BEAM DEPTH "H"	HINGE FOR 5–1/8 x GLB	BEAM DEPTH "H"	HINGE FOR 6–3/4 x GLB
0–15"	HC4C3TA5–5	0–18"	HC4C3TA7–5
16 1/2–18"	HC4C3TA5–6	19 1/2–24"	HC4C3TA7–6
19 1/2–22 1/2"	HC4C3TA5–7	25 1/2–28 1/2"	HC4C3TA7–7
24" UP	HC4C3TA5–9	30" UP	HC4C3TA7–9

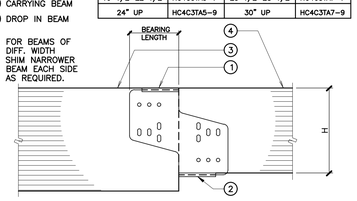

HINGE DETAIL 15
4223.DWG

1. ℄ OF COLUMN
2. 1/4" THK. SIDE PL. E.S. OF GLULAM BEAM W/ 4–3/4"DIA BOLTS
3. STRAP TIE CENTERED WHERE REQUIRED ON PLANS
4. 5/8" THK.x WIDTH OF GLULAM BEAM + 1 1/2" BEARING PL.
5. STEEL COLUMN SEE PLAN
6. PROVIDE HARD WD. FILLER AS REQUIRED
7. GLULAM BEAM CONT. OVER COLUMN (OR AS SHOWN IN PLANS)
8. SPLICE BEAM WHERE SHOWN ON PLANS

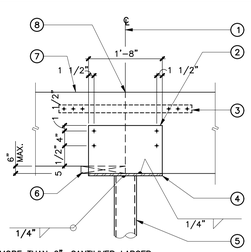

NOTE:
1. IF BEAM HEIGHTS DIFFER MORE THAN 6", CANTILIVER LARGER BEAM 2'–0", USE BEAM HINGE (SEE HINGE DETAIL) & COLUMN CAP
2. FOR BEAMS OF DIFFERENT THICKNESS, SHIM NARROWER BEAM EACH SIDE AS REQUIRED.
3. SLOPE COLUMN CAP TO MATCH ROOF SLOPE. DO NOT NOTCH BEAM

TYPICAL COLUMN CAP 20
4204.DWG

ktgy

17911 Von Karman Ave.
Suite 200
Irvine, CA 92614
ktgy.com
949.851.2133

ktgy Project Number

Contact	DORINA WATSON
Email	dwatson@ktgy.com
Senior Director	DAVID SCHMITZ
Designer	RUSSEL ROSALES

Developer
SEDC
23906 SOBOBA ROAD
SAN JACINTO, CA 92581

PHONE: (951) 663-2058

SOBOBA SOVOVATUM VILLAGE PHASE-2

SAN JACINTO, CA

No.	DATE	DESCRIPTION
	5/22/2026	FOR BID

Client is responsible for notifying architect in writing for any discovered errors or omissions in the plans and specifications during construction of the project. Failure for Client to notify Architect of any known errors or omissions in the plans or specifications, and proceeding with constructing the portion of work shown in the plans or specifications containing known errors or omissions shall be a waiver by Client for any liability of Architect for such known errors or omissions. Client releases Architect for any liability for such portions of work, and Architect shall not be liable for any delay damages, change orders, repair costs, removal or demolition costs, or replacement of any such portions of work.

REGISTERED PROFESSIONAL ENGINEER
ANDY M. NI
NO. 025812
EXP. 12-31-27
CIVIL
STATE OF CALIFORNIA

ANF & ASSOCIATES
Consulting Structural Engineers
T: (626) 448-8182
F: (626) 448-8092
E: anf1688@anfstructural.com
JOB# 025817.11
923 East Valley Blvd., Suite 268, San Gabriel, CA 91776

Sheet_Name

ROOF FRAMING DETAILS

2026-05-26, ISSUED FOR BID

ST2

COPYRIGHT 2024 KTGY GROUP INC. These plans and specifications are protected by United States copyright law and may not be used, reproduced, distributed, transmitted, displayed, or modified in any way without the prior written consent of KTGY Group, Inc. or the authorized copyright holder or licensee.

Printed: 1/7/2026 4:29:06 PM

1. CONC. SLAB, SEE PLAN FOR SUB-BASE & REINF.
2. #4x 36" @ 24" O.C. (ALT)
3. 1-#5 CONT.
4. CONT. FOOTING

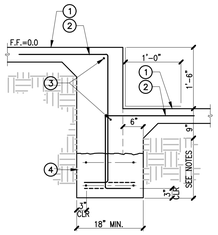

DETAIL 21

1. TS OR PIPE COL. SEE PLAN FOR SIZE & LOC.
2. F.F. LINE (SLAB INFO OMITTED FOR CLARITY)
3. CONC. GRADE BEAM (POURED AFTER COL. IS IN PLACE) SEE PLAN FOR SIZE & REINF.
4. SEE SCHEDULE ON ST1 FOR PL SIZE & A.B. ON 1" DRYPACK
5. SEE FOUNDATION PLAN FOR GRADE BEAM SIZE & REINF.
6. DOWELS TO MATCH GRADE BEAM (H) REINF. E.S. OF COL. (T&B) (WELD TO TS COL)

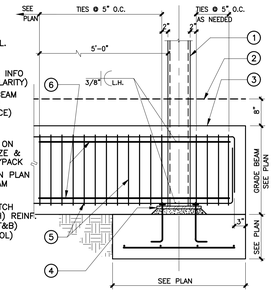

GRADE BEAM ELEVATION 16
7107.DWG

1. STRINGER SEE PLAN

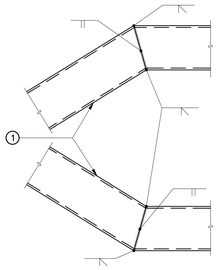

NOTE:
GRIND SMOOTH ALL WELDS

STAIR STRINGER WELD 11

1. 6x6 WOOD POST
2. SIMPSON HOLDOWN SEE PLAN
3. 2x SILL PL. SEE SCHEDULE
4. 3/4" PLYWOOD SHEATHING SEE PLAN
5. 6x12 OR GLB SEE PLAN
6. 2x STUD @16" O.C.

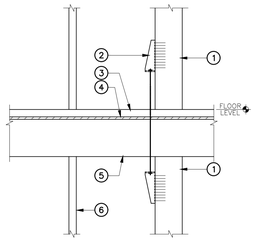

FLOOR TO FLOOR HOLDOWN DETAIL 6

1. CONT. SILL PL. W/16d NAIL SPACING SEE SHEAR WALL SCHEDULE
2. 1 1/2" LT. WT. & UNDERLAYMENT TOPPING, SEE ARCH'L.
3. 3/4" PLYWOOD SHT'G SEE PLAN & NOTES
4. G2T OPEN WEB TRUSS, SEE PLAN
5. SIMPSON 'HW' HANGER
6. 2x6 @16" O.C.
7. 1/2" STRUCT I PLYWOOD FOR FINISH SEE ARCH'L FOR NAILING SEE SHEAR WALL SCHEDULE
8. E.N.
9. B.N.
10. 6x12 OR GLB SEE PLAN
11. 2x BLK'G
12. 2x6 CONT. W/ 16d @4" O.C.
13. FINISH SEE ARCH'L.

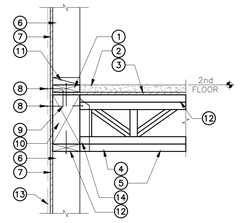

EXTERIOR BEARING WALL DETAIL 1

1. 2-2x CONT. TOP PL.
2. 2x BLOCKING W/ B.N.
3. 4-16d NAILS @ EA. STUD
4. 2x6 STUDS @ 16" O.C. FULL HT. PL TO PL
5. PLYWD FULL HT. WHERE SHOWN ON PLANS
6. FOR FINISH SEE ARCH'L
7. 5/8" PLYWD. W/ 16d @ 6; 12
8. 2x6 @ 16" O.C. BRACE (CALIFORNIA FRAMING)
9. SIMPSON H25 @ 16" O.C.
10. SIMPSON A35 @ 16" O.C.
11. 2x CONT. SILL PL. W/ 2-16d @ 16" O.C.
12. 2x6 @ 16" O.C. BRACE
13. 2x6 BRACE STUD W/ 2-16d @ 16" O.C.

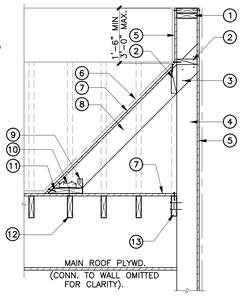

CALIFORNIA FRAMING DETAIL 22
5042.DWG

1. TS OR PIPE COL. SEE PLAN FOR SIZE & LOC.
2. F.F. LINE (SLAB INFO OMITTED FOR CLARITY)
3. CONC. GRADE BEAM (POURED AFTER COL. IS IN PLACE) SEE PLAN FOR SIZE & REINF.
4. SEE SCHED. ON ST1 FOR PL SIZE & A.B. IN 1" DRYPACK
5. DOWELS TO MATCH GRADE BEAM (H) REINF. E.S. OF COL. (T&B) (WELD TO TS COL)

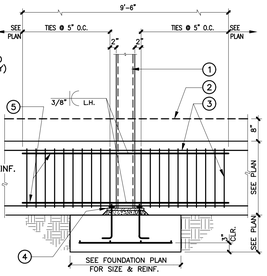

GRADE BEAM ELEVATION 17
7112.DWG

1. HSS COL. SEE PLAN
2. 1/4" STL PL.
3. C10x15.3 SEE PLAN
4. 1/2"x5"x8" BEARING PLATE
5. C12x20.7 STRINGER SEE PLAN
6. 2" THK. CONC. IN-FILL TREAD
7. 2" THK. CONC. IN-FILL OVER 3/16" STL. PAN LANDING
8. L 1 1/4x 1 1/4x 3/16" x 7" LG. CARRIER TYP.
9. L 1 1/4x 1 1/4x 3/16" CONT. LEDGER
10. 10 GA. STL. TREAD & RISER TYP.

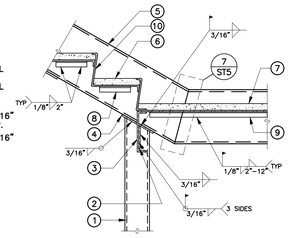

DETAIL 12

1. FOR WOOD STUD WALL SIZE, SEE PLAN
2. 3x6 STUD EA. SIDE W/ 5/8"ø STUD BOLTS @ 24" O.C.
3. HSS7x5x1/2 CONT.
4. GUIDE RAIL PIT SEE PLAN
5. SEE 5/ST3 FOR CONTINUATION

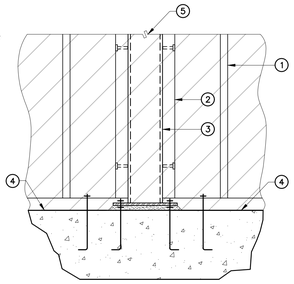

GUIDE RAIL AT PIT 7

1. CONT. SILL PL. W/16d NAIL SPACING SEE SHEAR WALL SCHEDULE
2. 1 1/2" LT. WT. & UNDERLAYMENT TOPPING, SEE ARCH'L.
3. 3/4" PLYWOOD SHT'G SEE PLAN & NOTES
4. 2x BLK'G @48" O.C.
5. G2T OPEN WEB TRUSS SEE PLAN
6. 2x6 @16" O.C.
7. 1/2" STRUCT I PLYWOOD FOR FINISH SEE ARCH'L FOR NAILING SEE SHEAR WALL SCHEDULE
8. E.N.
9. B.N.
10. 6x12 OR GLB SEE PLAN
11. 2x BLK'G
12. 2x4 FLAT BLK'G @48" O.C. W/ SIMPSON 'Z' HANGER
13. FINISH SEE ARCH'L.
14. SIMPSON 'U' HANGER

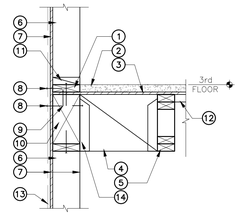

EXTERIOR NON BEARING WALL DETAIL 2

1. WOOD BEAM SEE PLAN FOR SIZE & LOC.
2. CRIPPLE STL. COL. SEE PLAN FOR SIZE & LOC.
3. SIMPSON 'CC66'

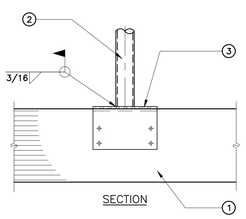

CRIPPLE STEEL COL. TO BEAM CONN. 23
4915.DWG

1. TS OR PIPE COL. SEE PLAN FOR SIZE & LOC.
2. CONC. GRADE BEAM POURED AFTER COL IS IN PLACE
3. CONC. SLAB SEE PLAN FOR BASE & REINF.
4. SEE STOREFRONT DETAIL FOR DOWELS
5. SEE GRADE BEAM ELEV. DETAIL FOR DOWELS E.S. OF COL. (T&B) (WELD TO TS COL)
6. SEE SCHEDULE ON ST1 FOR PL SIZE & A.B. ON 1" DRYPACK
7. CONC. SIDEWALK WHERE OCCURS, SEE PLAN

NOTE:
STOP SLAB TURNDOWN REINF. 2" CLEAR FROM FACE OF COL EA. SIDE

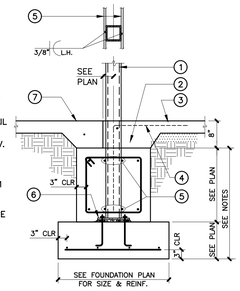

SECTION AT GRADE BEAM 18
7108.DWG

1. C12x20.7 STRINGTER SEE PLAN
2. 2" THK. CONC. IN-FILL OVER 3/16" STL. PAN LANDING
3. C12x20.7 SEE PLAN
4. 2" THK. CONC. IN-FILL TREADS
5. L 1 1/4x 1 1/4x 3/16" x 7" LG. CARRIER TYP.
6. 10 GA. STL. TREAD & RISER TYP.
7. SEE DETAIL 7/ST5

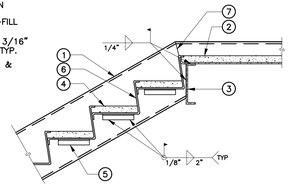

DETAIL 13

1. HSS7x5x1/2 FOR GUIDE RAIL SUPPORT (EA. SIDE)
2. 1/2" PLYWD. SEE SHEAR WALL
3. 2x6 @ 16" O.C. TYP. U.N.O.
4. 3x6 ℄ W/ 5/8"ø A.B. SPACING SEE SHEAR WALL SCHEDULE
5. 8" CONC. WALL W/ #4 @ 10" O.C. E.W.
6. ELEV. SHAFT SLEEVE AS REQUIRED
7. #4x 18" @ 12" O.C.
8. 1-#5 CONT.
9. 2x BLK'G W/ 16d @ 3" O.C.
10. 2x6 PL W/ 5/8"ø A.B. @ 24" O.C.
11. 1"x6"x14" BASE PL W/ 2-1"ø A.B. x 7" EMBED. ON 1" DRY PACK

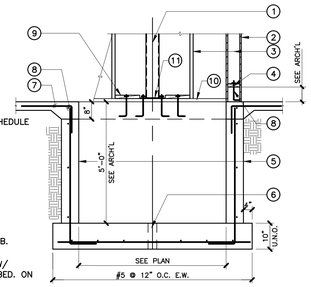

ELEVATOR PIT 8
1029.DWG

1. 3/4" PLYWOOD SHT'G
2. SIMPSON TYPE 'HW' HANGERS
3. GLB. SEE PLAN FOR SIZE & SPACING
4. 6x12 OR GLB SEE PLAN
5. PROVIDE 'HD' TIES SEE PLAN FOR SIZE & LOC.

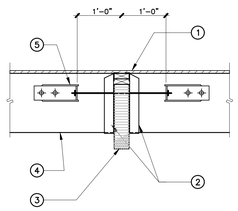

NOTE:
PROVIDE 'HW' TYPE MINIMUM FOR 6x AND GLULAM PURLIN U.N.O. ON PLAN.

TYP. PURLIN TIE AT STRUT LOC. 3
4735.DWG

1. HSS6X6X1/4 CONT. COLUMN
2. PLYWOOD SHEATHING
3. WOOD BEAM W/ 5/8"ø WELD STUD
4. 2x6 STUD @ 16" O.C.
5. 6x BLK'G W/ 5/8"ø WELD STUD @ 1/3 H LOCATION

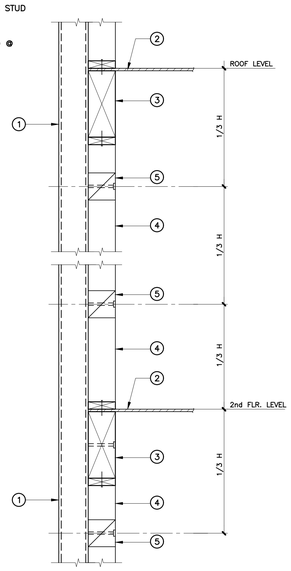

HSS COL. DETAIL 25

1. HSS BEAM SEE PLAN
2. HSS COL. SEE PLAN

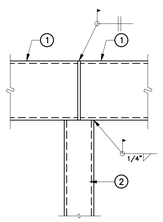

HSS BM. TO HSS COL. 19

1. C12x20.7 SEE PLAN
2. 2"THK CONC. IN-FILL OVER 3/16" STL. PAN LANDING
3. C10x15.3 SEE PLAN
4. 1/4" STEEL. PL.
5. L1 1/4x1 1/4x3/16 LEDGER BETW. STL. CHANNEL

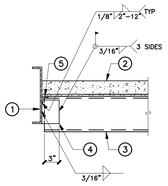

DETAIL 14

1. STL. STRINGER
2. L 1 1/4x 1 1/4x 3/16" x 8" LG. CARRIER TYP.
3. FUTURE CONC. SLAB ON GRADE BY TENANT
4. 2-#4
5. L 3x3x1/4"x 0'-9" LG. W/ 2-5/8"ø EXP. BOLTS
6. 1/4" CLOSURE PL. WELDED TO STRINGER AND GRIND SMOOTH
7. FOR STEP FINISH, SEE ARCH'L
8. #4 DOWELS @24" O.C.

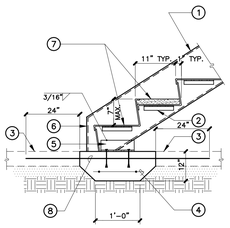

STAIR @ SLAB ON GRADE 9
0722.DWG

1. 2x6 STUD @16" O.C.
2. 2x6 SILL PL. TYP.
3. PLYWOOD SHEATHING SEE PLAN
4. 2-2x6 CONT. KILN DRIED TOP PL. OR 6x12 BM SEE PLAN
5. PROVIDE 2-1/2"ø THRU BOLT
6. HSS7x5x1/2 GUIDERAIL SUPPORT SEE PLAN
7. 3x6 STUD EA. SIDE W/5/8"ø WELD STUD @24" O.C.
8. 1/4"x4" STL. PL. W/2-5/8"ø LAG. BOLT x 3 1/2" EMBED TYP.

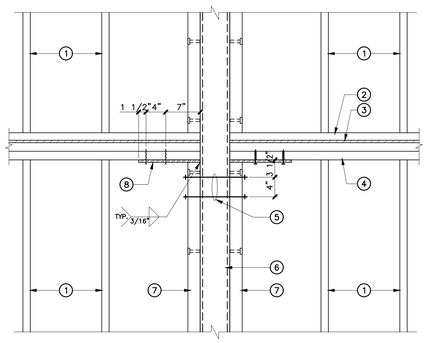

ELEVATOR GUIDERAIL DETAIL 5

HSS BEAM, SEE PLAN FOR SIZE

CARRYING HSS BEAM SEE PLAN FOR SIZE

HSS BEAM WHERE OCCURS

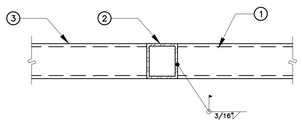

HSS BM. TO HSS. BM. 20

1. STEEL COL. ABOVE WHERE OCCURS
2. STEEL BEAM SEE PLAN
3. 1/4" STIFF. ℄ BOTH SIDES
4. 3/4" BEARING ℄ xBM. FLG. W/ 4-3/4"ø M.B.
5. STL. COL. SEE PLAN FOR SIZE & LOC.
6. 3/4" BEARING ℄ xBM. FLG. W/ 2-3/4"ø M.B.

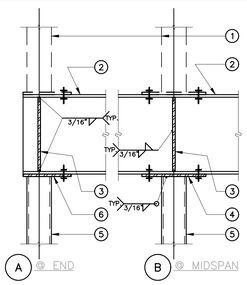

TYP. BM. TO STL. COL. CONN. 15
5816.DWG

1. STEEL COL. SEE PLAN OR SCHED. FOR SIZE & LOC.
2. 3/8" BACK PL. WELDED TO STEEL COL.
3. 3/16" BENT U-PL. (DAP INTO BEAM) W/ 2-3/4"ø M.B. TO BEAM (C.S. REQUIRED)
4. WOOD BEAM SEE PLAN

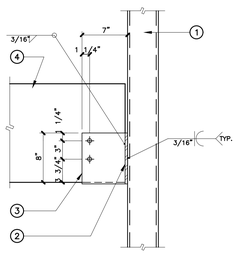

WOOD BEAM TO STEEL COL. CONN. 10
4214.DWG

Printed: 1/7/2026 4:29:06 PM

COPYRIGHT 2024 KTGY GROUP INC. These plans and specifications are protected by United States copyright law and may not be used, reproduced, distributed, transmitted, displayed, or modified in any way without the prior written consent of KTGY Group, Inc. or the authorized copyright holder or licensee.

ktgy

17911 Von Karman Ave.
Suite 200
Irvine, CA 92614
ktgy.com
949.851.2133

ktgy Project Number

Contact	DORINA WATSON
Email	dwatson@ktgy.com
Senior Director	DAVID SCHMITZ
Designer	RUSSEL ROSALES

Developer
SEDC
23906 SOBOBA ROAD
SAN JACINTO, CA 92581

PHONE: (951) 663-2058

SOBOBA SOVOVATUM VILLAGE PHASE-2

SAN JACINTO, CA

No.	DATE	DESCRIPTION
	5/22/2026	FOR BID

Client is responsible for notifying architect in writing for any discovered errors or omissions in the plans and specifications during construction of the project. Failure for Client to notify Architect of any known errors or omissions in the plans or specifications, and proceeding with constructing the portion of work shown in the plans or specifications containing known errors or omissions shall be a waiver by Client for any liability of Architect for such known errors or omissions. Client releases Architect for any liability for such portions of work, and Architect shall not be liable for any delay damages, change orders, repair costs, removal or demolition costs, or replacement of any such portions of work.

REGISTERED PROFESSIONAL ENGINEER
ANDY M. NG
NO. 025817
EXP. 12-31-27
CIVIL
STATE OF CALIFORNIA

ANF & ASSOCIATES, INC.
Consulting Structural Engineers
T: (626) 448-8182
F: (626) 448-8092
E: anf1688@anfstructural.com
JOB# 025817.11
923 East Valley Blvd., Suite 268, San Gabriel, CA 91776

Sheet_Name

STRUCTURAL DETAILS

ST3

2026-05-26, ISSUED FOR BID

FOUNDATION NOTES:

FOOTING SYMBOL, FOR SIZE SEE SCHEDULE.

*SHEARWALL SYMBOL, FOR SIZE SEE SCHEDULE.

DETAIL No. / SHEET No. DETAIL SYMBOL

1. FOR DIMENSIONS AND CONDITIONS NOT SHOWN SEE ARCH'L DWGS. AND VERIFY IN FIELD.
2. SEE STRUCTURAL GENERAL NOTES IN SHEET ST-1.
3. FOR FLOOR DEPRESSIONS, CURBS, UNDERFLOOR DUCTS, CONDUITS, ETC., SEE ARCHITECTURAL, MECHANICAL, PLUMBING AND ELECTRICAL DWGS.
4. FOR FINISH FLOOR ELEVATION, SLOPE, DRAINS, SEE ARCH'L DWGS.
5. CT.J. DENOTES CONTROL JOINT
   C.J. DENOTES CONSTRUCTION JOINT
6. TYPICAL DETAILS NOT SHOWN, SEE SHEET ST-1.

* WHERE SHEARWALL OCCURS

9 | 8 | 7 | 6 | NOTES 2007A.DWG | 1

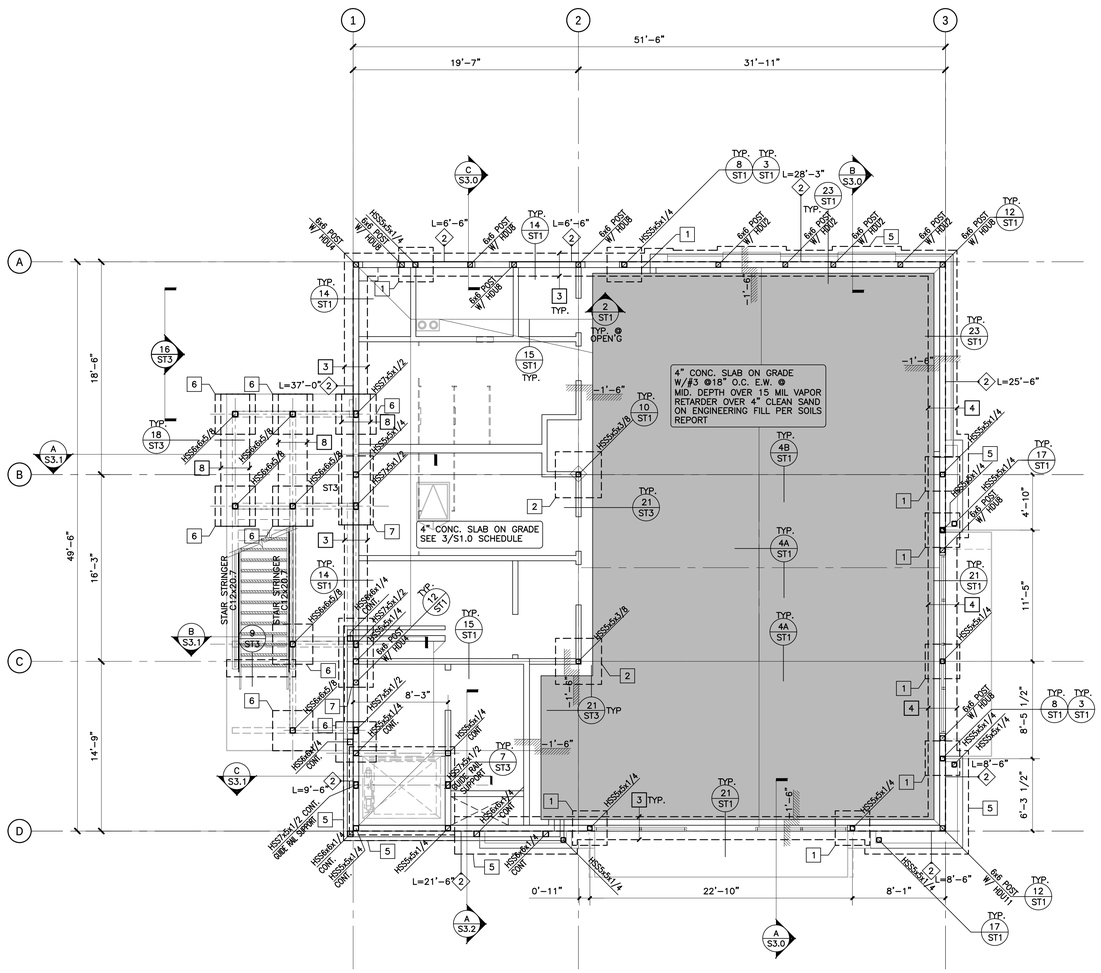

FOOTING SCHEDULE

MARK	SIZE	THK.	REINF (B)	REMARKS
1	3'-0" SQ	12"	3-#5 E.W.	
2	4'-0" SQ	12"	4-#5 E.W.	
3	2'-0" CONT.	12"	2-#5 T&B	
4	2'-6" CONT.	12"	4-#5 T&B LONGIT #4@16" O.C. TRANSIT (T)	
5	6" LARGER THAN ARCH'L BOX	12"	#5 @ 12" O.C. E.W.	
6	3'-6" SQ	12"	4-#5 E.W.	
7	3'-0"x6'-0"	12"	3-#5 LONGIT 6-#5 SHORT	
8	30" WIDE GRADE BEAM	24"	2-#7 T & B #4 STIRRUPS @10"O.C.	

SCHEDULE 2005B.DWG | 2

SLAB SCHEDULE

AREA	THK. (PSI)	REINF.	SUB-BASE	CONTROL JOINT (MAX. SPAC'G)	REMARKS
INTERIOR	4" f'c=3000	#3@18"O.C. EA. WAY @ MID DEPTH	OVER 15 MIL VAPOR RETARDER OVER 4" CLEAN SAND OVER ENGINEERING FILL PER SOILS REPORT	12'-0"	
EXTERIOR SIDEWALK	4" f'c=3000	#3@18"O.C. EA. WAY @ MID DEPTH	COMPACTED FILL PER SOILS REPORT	5'-0"	

SCHEDULE 2005B.DWG | 3

SHEAR WALL SCHEDULE (C.B.C. 2022)

MARK	SHEAR ALLOW. (#/FT)	TYPE OF MATERIAL	EDGE NAILING	FIELD NAILING	SILL BOLT (C.S. NOT ALLOW)	REMARKS
1	340	1/2" STRUCT. I PLYWD. ONE SIDE, BLOCKED	10d @ 6" O.C.	10d @ 12" O.C.	2x W/ 5/8"Ø A.B. @32"	3,4,5,6,7
2	510	1/2" STRUCT. I PLYWD. ONE SIDE, BLOCKED	10d @ 4" O.C.	10d @ 12" O.C.	3x W/ 5/8"Ø A.B. @24"	1,2,3,4,5,6,7
3	665	1/2" STRUCT. I PLYWD. ONE SIDE, BLOCKED	10d @ 3" O.C.	10d @ 12" O.C.	3x W/ 5/8"Ø A.B. @16"	1,2,3,4,5,6,7
4	870	1/2" STRUCT. I PLYWD. ONE SIDE, BLOCKED	10d @ 2" O.C.	10d @ 12" O.C.	3x W/ 3/4"Ø A.B. @24"	1,2,3,4,5,6,7
5	1020	1/2" STRUCT. I PLYWD. BOTH SIDE, BLOCKED	10d @ 4" O.C.	10d @ 12" O.C.	3x W/ 3/4"Ø A.B. @16"	1,2,3,4,5,6,7
6	1330	1/2" STRUCT. I PLYWD. BOTH SIDES, BLOCKED	10d @ 3" O.C.	10d @ 12" O.C.	3x W/ 3/4"Ø A.B. @12"	1,2,3,4,5,6,7

NOTES:

1. USE 3x STUDS @ ALL JOINTS @ EDGES, STAGGER NAILING EACH SIDE OF JOINTS.
2. USE 3x SILL PLATES.
3. FOUNDATION SILL PLATES SHALL BE NATURALLY DURABLE OR PRESERVATIVE TREATED WOOD.
4. ALL SILL PLATES SHALL BE PREDRILLED.
5. ALL NAILS SHALL BE COMMON NAILS.
6. SILL BOLT WASHER PL. TYP – USE 3"x 3"x 1/4"
7. SILL BOLT EMBEDMENT LENGTH = 7" MIN FROM CONC. SLAB

SCHEDULE | 4

N

FOUNDATION PLAN | SCALE 3/16"=1'-0" | A | 5

ktgy

17911 Von Karman Ave.
Suite 200
Irvine, CA 92614
ktgy.com
949.851.2133

ktgy Project Number

Contact DORINA WATSON
Email dwatson@ktgy.com
Senior Director DAVID SCHMITZ
Designer RUSSEL ROSALES

Developer
SEDC
23906 SOBOBA ROAD
SAN JACINTO, CA 92581

PHONE: (951) 663-2058

SOBOBA SOVOVATUM VILLAGE PHASE-2

SAN JACINTO, CA

No.	DATE	DESCRIPTION
	5/22/2026	FOR BID

Client is responsible for notifying architect in writing for any discovered errors or omissions in the plans and specifications during construction of the project. Failure for Client to notify Architect of any known errors or omissions in the plans or specifications, and proceeding with constructing the portion of work shown in the plans or specifications containing known errors or omissions shall be a waiver by Client for any liability of Architect for such known errors or omissions. Client releases Architect for any liability for such portions of work, and Architect shall not be liable for any delay damages, change orders, repair costs, removal or demolition costs, or replacement of any such portions of work.

REGISTERED PROFESSIONAL ENGINEER ANDY M. YU NO. 72812 EXP. 12-31-27 CIVIL STATE OF CALIFORNIA

ANF & ASSOCIATES, INC.
Consulting Structural Engineers
T: (626) 448-8182
F: (626) 448-8092
E: anf1688@anfstructural.com
JOB# 025817.11
923 East Valley Blvd., Suite 268, San Gabriel, CA 91776

Sheet_Name
2 STORY VANILLA SHELL BUILDING FOUNDATION PLAN

2026-05-26, ISSUED FOR BID

S1.0

Printed: 1/7/2026 4:29:08 PM

COPYRIGHT 2024 KTGY GROUP INC. These plans and specifications are protected by United States copyright law and may not be used, reproduced, distributed, transmitted, displayed, or modified in any way without the prior written consent of KTGY Group, Inc. or the authorized copyright holder or licensee.

ROOF FRAMING NOTES:

8 — ROOF BEAM SYMBOL

0 / 0 — DETAIL No. / SHEET No. — ROOF BEAM SYMBOL

"C = " — GLULAM BEAM CAMBER

HANGERS SHOWN ARE TYP., CONTRACTOR TO VERIFY IN FIELD THE USE OF SLOPED AND/OR SKEWED HANGERS. CONTRACTOR TO USE SADDLE HANGER AS REQUIRED.

1. FOR ROOF ELEVATIONS, SLOPES, WALL HEIGTHS, ROOF OPENINGS, ETC., SEE ARCH'L PLANS, SECTIONS, ELEVATIONS AND DETAILS.
2. SEE STRUCTURAL GENERAL NOTES ON SHEET ST0 (OR ST1 AS REQUIRED).
3. FOR MECHANICAL EQUIPMENT LOCATION, SIZE, OPENINGS,ETC., SEE ARCHITECTURAL AND MECHANICAL DRAWINGS.
4. FOR DIMENSIONS AND CONDITIONS NOT SHOWN, SEE ARCH'L, MECHANICAL AND A/C DRAWINGS, AND VERIFY IN FIELD.
5. TYP DETAILS NOT SHOWN, SEE SHEETS ST2, ST3, ETC..
6. TYP LO BEAM SCHEDULE AT STOREFRONT (U.N.O.):

SPAN (L)	BEAM SIZE
L ≤ 10'–0"	6x12
10'–0" < L ≤ 14'–0"	6x14
14'–0" < L ≤ 20'–0"	6x16
L > 20'–0"	SEE FRAMING PLAN

NOTES
1806A.DWG

1. THE G2T OPEN WEB WOOD TRUSSES SPECIFIED SHALL BE DESIGNED AND SUPPLIED IN ACCORDANCE WITH THE SPECIFICATIONS AND THE FOLLOWING APPLICABLE STANDARDS: ICC ESR 1311 & ESR 1311 SUPPLEMENT FOR CBC, ICC ESR 1988 & ESR 1988 SUPPLEMENT FOR CBC, AND THE LATEST EDITIONS OF THE CBC.
2. TRUSS TOP CHORDS SHALL BE DESIGNED AND REINFORCED AS NECESSARY WITH MAXIMUM 1/2" THICK APA–RATED OSB GLUED–LAMINATED TO THE TOP OF THE CHORD IN ACCORDANCE WITH ANSI I90.I WITH LAMINATING PRESSURE NOT TO EXCEED 250 PSI AND NOT BELOW 100 PSI. THE TOP CHORD OF THE TRUSS IS THE CRITICAL ELEMENT FOR SEISMIC LOAD TRANSFER IN THE DIAPHRAGM DESIGN. NO EXCEPTIONS.
3. G2T TRUSSES SHALL BE DESIGNED WITH CONTINUOUS ONE PIECE FULL LENGTH FINGER JOINTED CHORDS, WITH MACHINE STRESS RATED LUMBER, TENSION TESTED PER ANSI A190.1
4. G2T TRUSSES ARE SPECIFIED AND IDENTIFIED AS BEING SUPPLIED BY G2 STRUCTURAL, CONTACT DAVE ROTI AT 858–486–4473. OTHER SUPPLIERS MAY BE ACCEPTABLE IF THEY ADHERE STRICTLY TO THE SPECIFICATIONS OUTLINED IN THE NOTES ABOVE, AND TO THE GUIDELINES SET FORTH BY THE TRUSS PLATE INSTITUTE, INCLUDING EMPLOYING INDEPENDENT THIRD PARTY PLANT AND FABRICATION QUALITY CONTROL INSPECTION.
5. MANUFACTURER SHALL PROVIDE CALCULATIONS AND SHOP DRAWINGS SHOWING ALL CRITICAL DIMENSIONS FOR DETERMINING FIT AND PLACEMENT IN THE BUILDING AS WELL AS COMPLYING WITH THE SPECIFIED DESIGN LOADS, AND SHALL SUBMIT TO ENGINEER/ARCHITECT FOR APPROVAL PRIOR TO FABRICATION.
6. ALTERNATE PRODUCTS MAY BE AVAILABLE FROM REDBUILT, LLC AND REQUIRES APPROVAL FROM THE ENGINEER OF RECORD PRIOR BIDDING.
7. DESIGN LOADS:

   FLOOR:

   A. SUPERIMPOSED DL = 30 PSF + 20 PSF (TRUSS INCLUDED)
      LL = 50 PSF

PLATED TRUSS\JOIST NOTES
1811TA.DWG

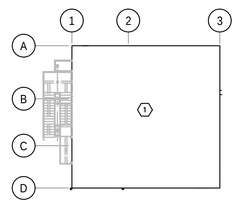

2nd FLR. DIAPHRAGM NAILING SCHEDULE				
AREA				REMARKS
1	10dØ4" O.C.	6" O.C.	10" O.C.	

NOTE:
NAILS SHALL BE COMMON NAILS.

SCHEDULE

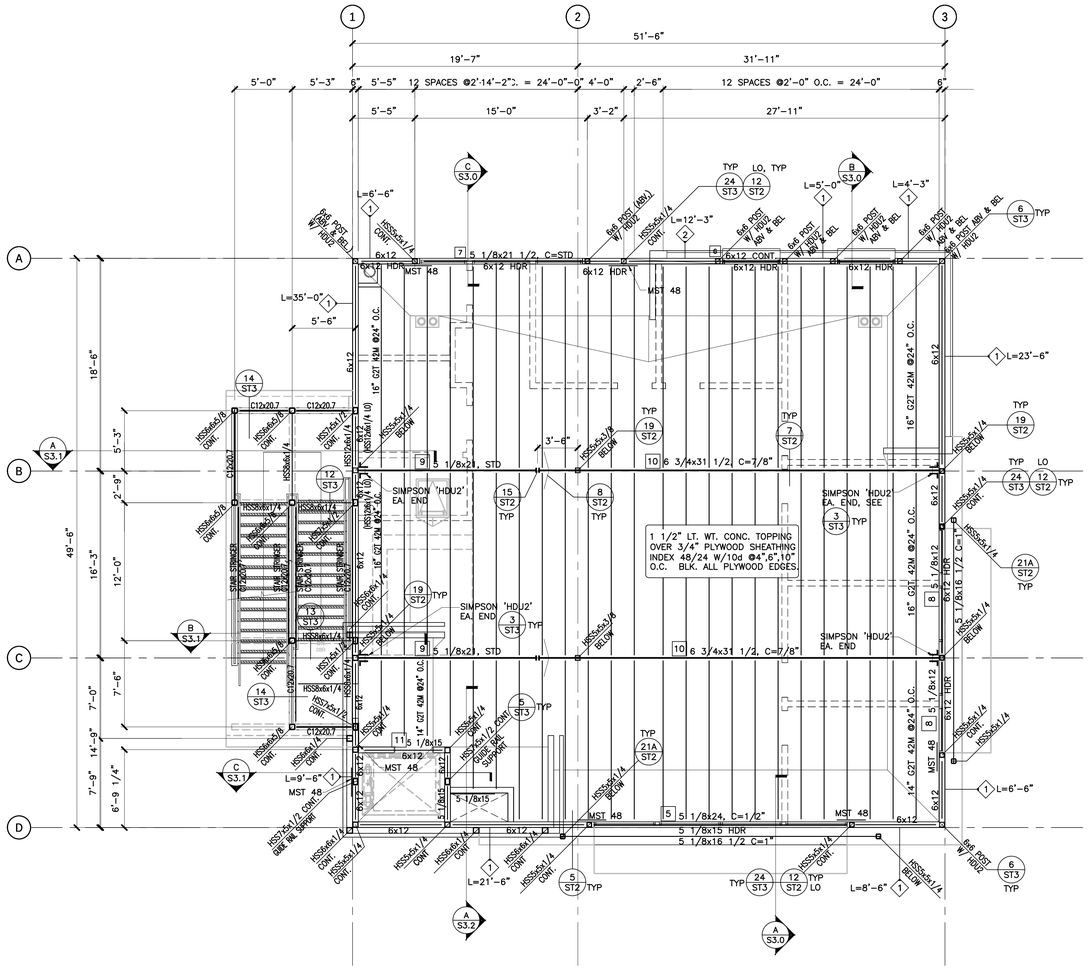

SECOND FLOOR FRAMING PLAN

SCALE 3/16"=1'–0" **A**

N

8 **7** **6** **5** **1** **2** **3** **4**

ktgy

17911 Von Karman Ave.
Suite 200
Irvine, CA 92614
ktgy.com
949.851.2133

ktgy Project Number

Contact DORINA WATSON
Email dwatson@ktgy.com
Senior Director DAVID SCHMITZ
Designer RUSSEL ROSALES

Developer
SEDC
23906 SOBOBA ROAD
SAN JACINTO, CA 92581

PHONE: (951) 663-2058

SOBOBA SOVOVATUM VILLAGE PHASE-2

SAN JACINTO, CA

No.	DATE	DESCRIPTION
	5/22/2026	FOR BID

Client is responsible for notifying architect in writing for any discovered errors or omissions in the plans and specifications during construction of the project. Failure for Client to notify Architect of any known errors or omissions in the plans or specifications, and proceeding with constructing the portion of work shown in the plans or specifications containing known errors or omissions shall be a waiver by Client for any liability of Architect for such known errors or omissions. Client releases Architect for any liability for such portions of work, and Architect shall not be liable for any delay damages, change orders, repair costs, removal or demolition costs, or replacement of any such portions of work.

REGISTERED PROFESSIONAL ENGINEER
ANDY M. NI
NO. 022812
EXP. 12-31-27
CIVIL
STATE OF CALIFORNIA

ANF & ASSOCIATES
T: (626) 448-8182
F: (626) 448-8092
Consulting Structural Engineers E: anf1688@anfstructural.com
JOB# 025817.11
923 East Valley Blvd., Suite 268, San Gabriel, CA 91776

Sheet_Name
2 STORY VANILLA SHELL BUILDING 2nd FLOOR FRM'G PLAN

2026-05-26, ISSUED FOR BID

S1.1

Printed: 1/7/2026 4:29:06 PM

COPYRIGHT 2024 KTGY GROUP INC. These plans and specifications are protected by United States copyright law and may not be used, reproduced, distributed, transmitted, displayed, or modified in any way without the prior written consent of KTGY Group, Inc. or the authorized copyright holder or licensee.

ROOF FRAMING NOTES:

8 — ROOF BEAM SYMBOL

0 / 0 — DETAIL No. / SHEET No. — ROOF BEAM SYMBOL

"C = " GLULAM BEAM CAMBER

HANGERS SHOWN ARE TYP., CONTRACTOR TO VERIFY IN FIELD THE USE OF SLOPED AND/OR SKEWED HANGERS. CONTRACTOR TO USE SADDLE HANGER AS REQUIRED.

1. FOR ROOF ELEVATIONS, SLOPES, WALL HEIGTHS, ROOF OPENINGS, ETC., SEE ARCH'L PLANS, SECTIONS, ELEVATIONS AND DETAILS.
2. SEE STRUCTURAL GENERAL NOTES ON SHEET ST0 (OR ST1 AS REQUIRED).
3. FOR MECHANICAL EQUIPMENT LOCATION, SIZE, OPENINGS,ETC., SEE ARCHITECTURAL AND MECHANICAL DRAWINGS.
4. FOR DIMENSIONS AND CONDITIONS NOT SHOWN, SEE ARCH'L, MECHANICAL AND A/C DRAWINGS, AND VERIFY IN FIELD.
5. TYP DETAILS NOT SHOWN, SEE SHEETS ST2, ST3, ETC..
6. TYP LO BEAM SCHEDULE AT STOREFRONT (U.N.O.):

SPAN (L)	BEAM SIZE
L ≤ 10'–0"	6x12
10'–0" < L ≤ 14'–0"	6x14
14'–0" < L ≤ 20'–0"	6x16
L > 20'–0"	SEE FRAMING PLAN

NOTES 1806A.DWG — 1

1. THE G2T OPEN WEB WOOD TRUSSES SPECIFIED SHALL BE DESIGNED AND SUPPLIED IN ACCORDANCE WITH THE SPECIFICATIONS AND THE FOLLOWING APPLICABLE STANDARDS: ICC ESR 1311 & ESR 1311 SUPPLEMENT FOR CBC, ICC ESR 1988 & ESR 1988 SUPPLEMENT FOR CBC, AND THE LATEST EDITIONS OF THE CBC.
2. TRUSS TOP CHORDS SHALL BE DESIGNED AND REINFORCED AS NECESSARY WITH MAXIMUM 1/2" THICK APA–RATED OSB GLUED–LAMINATED TO THE TOP OF THE CHORD IN ACCORDANCE WITH ANSI I90.I WITH LAMINATING PRESSURE NOT TO EXCEED 250 PSI AND NOT BELOW 100 PSI. THE TOP CHORD OF THE TRUSS IS THE CRITICAL ELEMENT FOR SEISMIC LOAD TRANSFER IN THE DIAPHRAGM DESIGN. NO EXCEPTIONS.
3. G2T TRUSSES SHALL BE DESIGNED WITH CONTINUOUS ONE PIECE FULL LENGTH FINGER JOINTED CHORDS, WITH MACHINE STRESS RATED LUMBER, TENSION TESTED PER ANSI A190.1
4. G2T TRUSSES ARE SPECIFIED AND IDENTIFIED AS BEING SUPPLIED BY G2 STRUCTURAL, CONTACT DAVE ROTI AT 858–486–4473. OTHER SUPPLIERS MAY BE ACCEPTABLE IF THEY ADHERE STRICTLY TO THE SPECIFICATIONS OUTLINED IN THE NOTES ABOVE, AND TO THE GUIDELINES SET FORTH BY THE TRUSS PLATE INSTITUTE, INCLUDING EMPLOYING INDEPENDENT THIRD PARTY PLANT AND FABRICATION QUALITY CONTROL INSPECTION.
5. MANUFACTURER SHALL PROVIDE CALCULATIONS AND SHOP DRAWINGS SHOWING ALL CRITICAL DIMENSIONS FOR DETERMINING FIT AND PLACEMENT IN THE BUILDING AS WELL AS COMPLYING WITH THE SPECIFIED DESIGN LOADS, AND SHALL SUBMIT TO ENGINEER/ARCHITECT FOR APPROVAL PRIOR TO FABRICATION.
6. ALTERNATE PRODUCTS MAY BE AVAILABLE FROM REDBUILT, LLC AND REQUIRES APPROVAL FROM THE ENGINEER OF RECORD PRIOR BIDDING.
7. DESIGN LOADS:
   ROOF:
   A. SUPERIMPOSED DL = 14 PSF + 4 PSF (SOLAR SYSTEM INCLUDED)
      LL = 20 PSF
   B. ROOF TOP UNITS WEIGHT, SEE PLAN.
   C. ALL ROOF PURLIN/TRUSS SHALL HAVE ADDITIONAL 1500 lb POINT LOAD CAPACITY AT ANY ONE POINT ALONG THE TOP CHORD/PANEL JOINT.
   D. WIND UPLIFT 10PSF NET @ MAIN ROOF
8. ROOF TOP ELEMENTS LOADS:
   RETURN PARAPET WALL = 200 PLF (U.N.O.)
   HUNG PARTITION = 100 PLF (U.N.O.)
   TOWER WALL = 450 PLF (U.N.O.)
   TOWER CORNER POST = TL=2.8 KIPS (U.N.O.)
   TOWER CENTER POST = TL=5.6 KIPS (U.N.O.)
9. PARAPET BRACING WIND LOAD = 340 PLF (UP AND DOWN)

PLATED TRUSS 1811A.DWG — 2

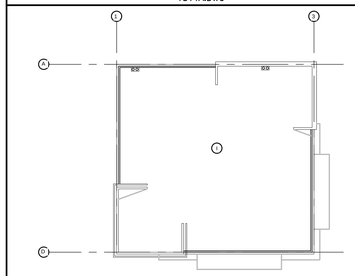

ROOF DIAPHRAGM NAILING SCHEDULE				
AREA	BOUNDARY & CONT. EDGES	EDGES	INTERM.	REMARKS*
I	10d @ 4" O.C.	6" O.C.	12" O.C.	

NOTE: ALL NAILS SHALL BE COMMON NAILS

SCHEDULE 1806B.DWG — 3

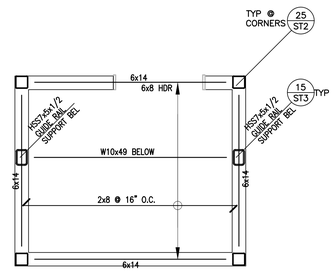

ROOF FRAMING PLAN — A

SCALE 3/16"=1'–0"

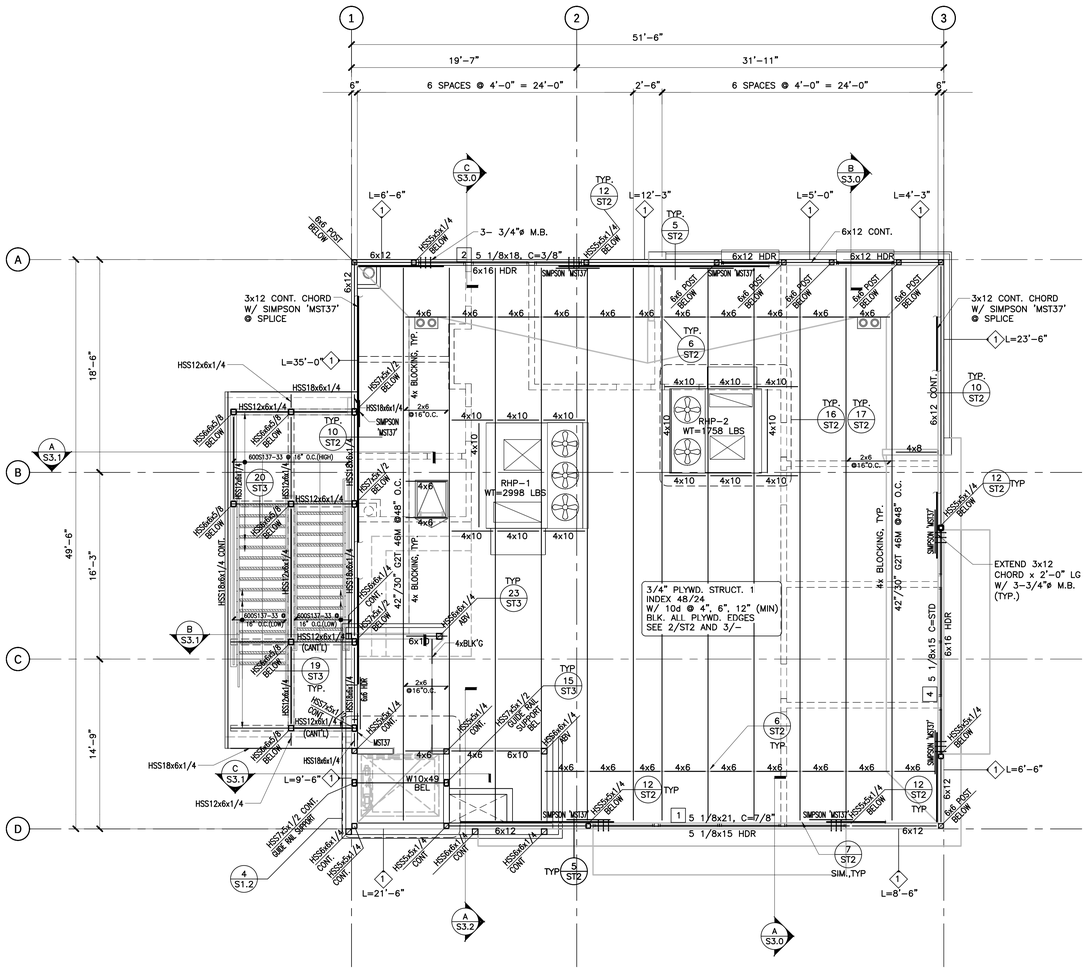

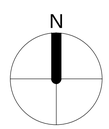

ELEVATOR SHAFT ROOF FRAMING PLAN — 4

ktgy

17911 Von Karman Ave.
Suite 200
Irvine, CA 92614
ktgy.com
949.851.2133

ktgy Project Number

Contact DORINA WATSON
Email dwatson@ktgy.com
Senior Director DAVID SCHMITZ
Designer RUSSEL ROSALES

Developer
SEDC
23906 SOBOBA ROAD
SAN JACINTO, CA 92581

PHONE: (951) 663-2058

SOBOBA SOVOVATUM VILLAGE PHASE-2

SAN JACINTO, CA

No.	DATE	DESCRIPTION
	5/22/2026	FOR BID

Client is responsible for notifying architect in writing for any discovered errors or omissions in the plans and specifications during construction of the project. Failure for Client to notify Architect of any known errors or omissions in the plans or specifications, and proceeding with constructing the portion of work shown in the plans or specifications containing known errors or omissions shall be a waiver by Client for any liability of Architect for such known errors or omissions. Client releases Architect for any liability for such portions of work, and Architect shall not be liable for any delay damages, change orders, repair costs, removal or demolition costs, or replacement of any such portions of work.

REGISTERED PROFESSIONAL ENGINEER — ANDY M. YU — NO. 022812 — EXP. 12-31-27 — CIVIL — STATE OF CALIFORNIA

ANF & ASSOCIATES
T: (626) 448-8182
F: (626) 448-8092
Consulting Structural Engineers E: anf1688@anfstructural.com
JOB# 025817.11
923 East Valley Blvd., Suite 268, San Gabriel, CA 91776

Sheet_Name
2 STORY VANILLA SHELL BUILDING ROOF FRM'G PLAN

2026-05-26, ISSUED FOR BID

S1.2

Plotted: 1/7/2026 4:29:09 PM

COPYRIGHT 2024 KTGY GROUP INC. These plans and specifications are protected by United States copyright law and may not be used, reproduced, distributed, transmitted, displayed, or modified in any way without the prior written consent of KTGY Group, Inc. or the authorized copyright holder or licensee.

ROOF FRAMING NOTES:

8 — ROOF BEAM SYMBOL

0 / 0 — DETAIL No. / SHEET No. — ROOF BEAM SYMBOL

"C = " GLULAM BEAM CAMBER

HANGERS SHOWN ARE TYP., CONTRACTOR TO VERIFY IN FIELD THE USE OF SLOPED AND/OR SKEWED HANGERS. CONTRACTOR TO USE SADDLE HANGER AS REQUIRED.

1. FOR ROOF ELEVATIONS, SLOPES, WALL HEIGTHS, ROOF OPENINGS, ETC., SEE ARCH'L PLANS, SECTIONS, ELEVATIONS AND DETAILS.
2. SEE STRUCTURAL GENERAL NOTES ON SHEET ST0 (OR ST1 AS REQUIRED).
3. FOR MECHANICAL EQUIPMENT LOCATION, SIZE, OPENINGS,ETC., SEE ARCHITECTURAL AND MECHANICAL DRAWINGS.
4. FOR DIMENSIONS AND CONDITIONS NOT SHOWN, SEE ARCH'L, MECHANICAL AND A/C DRAWINGS, AND VERIFY IN FIELD.
5. TYP DETAILS NOT SHOWN, SEE SHEETS ST2, ST3, ETC..
6. TYP LO BEAM SCHEDULE AT STOREFRONT (U.N.O.):

SPAN (L)	BEAM SIZE
L ≤ 10'–0"	6x12
10'–0" < L ≤ 14'–0"	6x14
14'–0" < L ≤ 20'–0"	6x16
L > 20'–0"	SEE FRAMING PLAN

NOTES
1806A.DWG

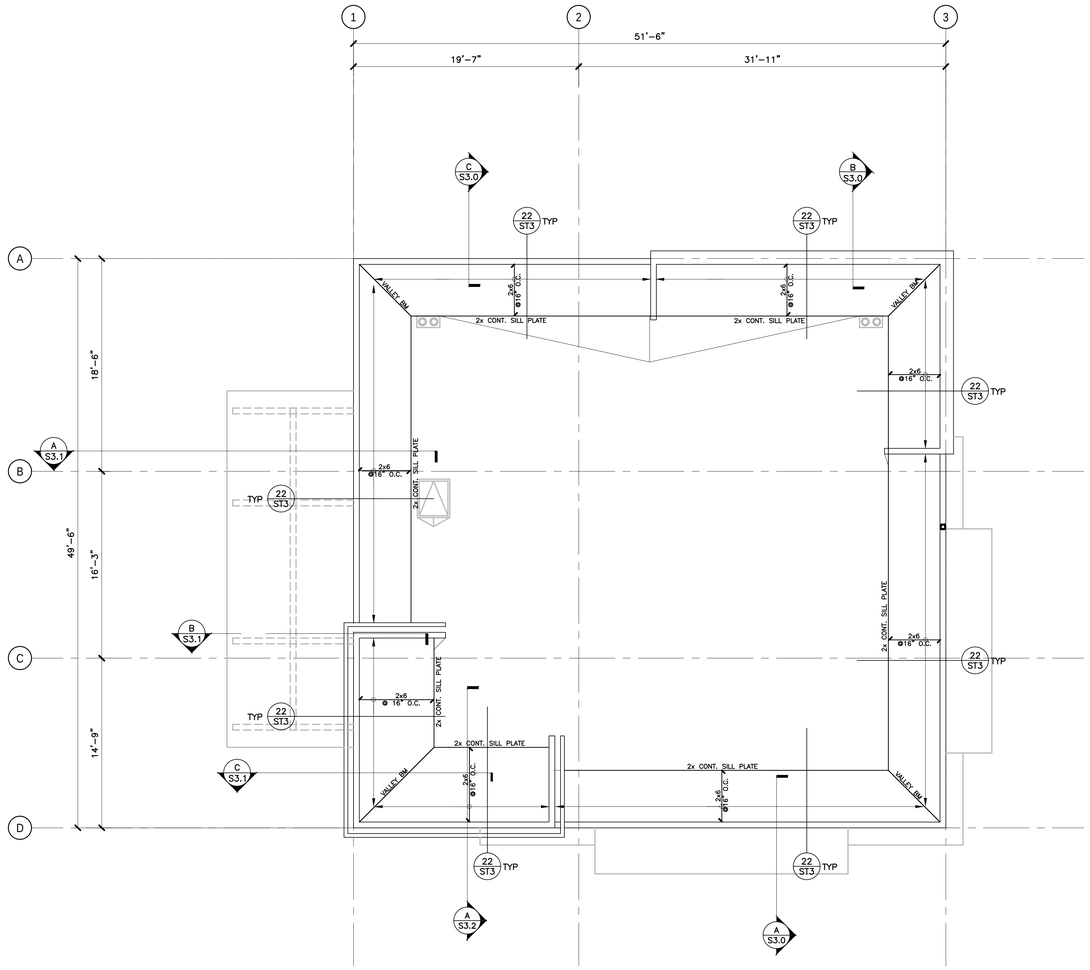

HIGH ROOF FRAMING PLAN

SCALE 3/16"=1'–0" A

N

ktgy

17911 Von Karman Ave.
Suite 200
Irvine, CA 92614
ktgy.com
949.851.2133

ktgy Project Number

Contact	DORINA WATSON
Email	dwatson@ktgy.com
Senior Director	DAVID SCHMITZ
Designer	RUSSEL ROSALES

Developer
SEDC
23906 SOBOBA ROAD
SAN JACINTO, CA 92581

PHONE: (951) 663-2058

SOBOBA SOVOVATUM VILLAGE PHASE-2

SAN JACINTO, CA

No.	DATE	DESCRIPTION
	5/22/2026	FOR BID

Client is responsible for notifying architect in writing for any discovered errors or omissions in the plans and specifications during construction of the project. Failure for Client to notify Architect of any known errors or omissions in the plans or specifications, and proceeding with constructing the portion of work shown in the plans or specifications containing known errors or omissions shall be a waiver by Client for any liability of Architect for such known errors or omissions. Client releases Architect for any liability for such portions of work, and Architect shall not be liable for any delay damages, change orders, repair costs, removal or demolition costs, or replacement of any such portions of work.

REGISTERED PROFESSIONAL ENGINEER — ANDY M. TO — NO. C72612 — EXP. 12-31-27 — CIVIL — STATE OF CALIFORNIA

ANF & ASSOCIATES, INC. T: (626) 448-8182 F: (626) 448-8092
Consulting Structural Engineers E: anf1688@anfstructural.com
JOB# 025817.11
923 East Valley Blvd., Suite 268, San Gabriel, CA 91776

Sheet_Name
2 STORY VANILLA SHELL BUILDING HI-ROOF FRM'G PLN

S1.3

2026-05-26, ISSUED FOR BID

Printed: 1/7/2026 4:29:06 PM

COPYRIGHT 2024 KTGY GROUP INC. These plans and specifications are protected by United States copyright law and may not be used, reproduced, distributed, transmitted, displayed, or modified in any way without the prior written consent of KTGY Group, Inc. or the authorized copyright holder or licensee.

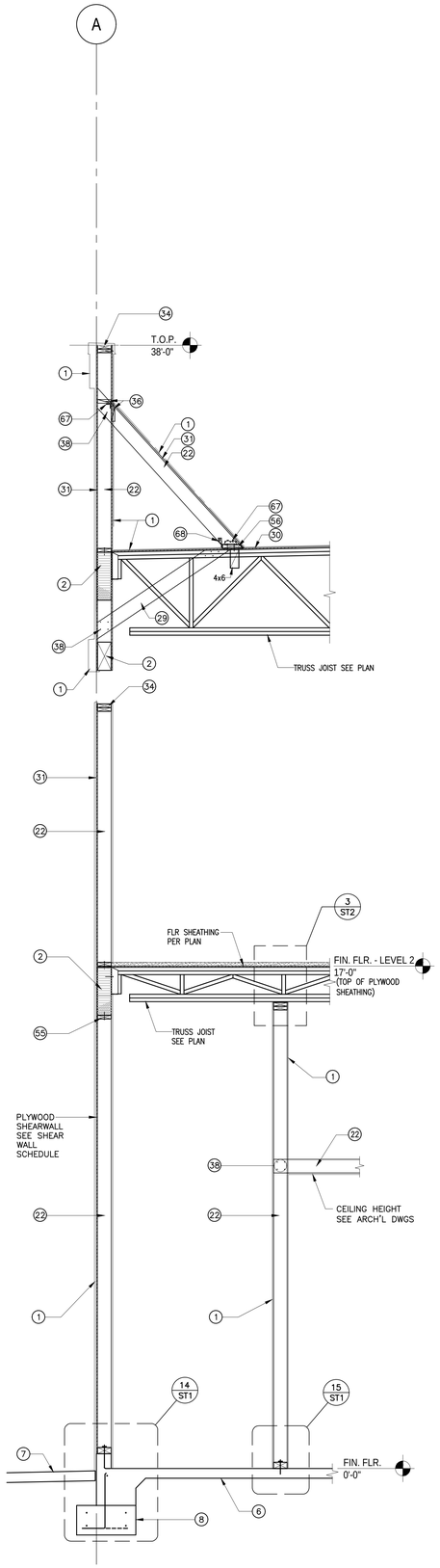

SECTION | REF: 4/A411 | SCALE 1/2"=1'-0" | C

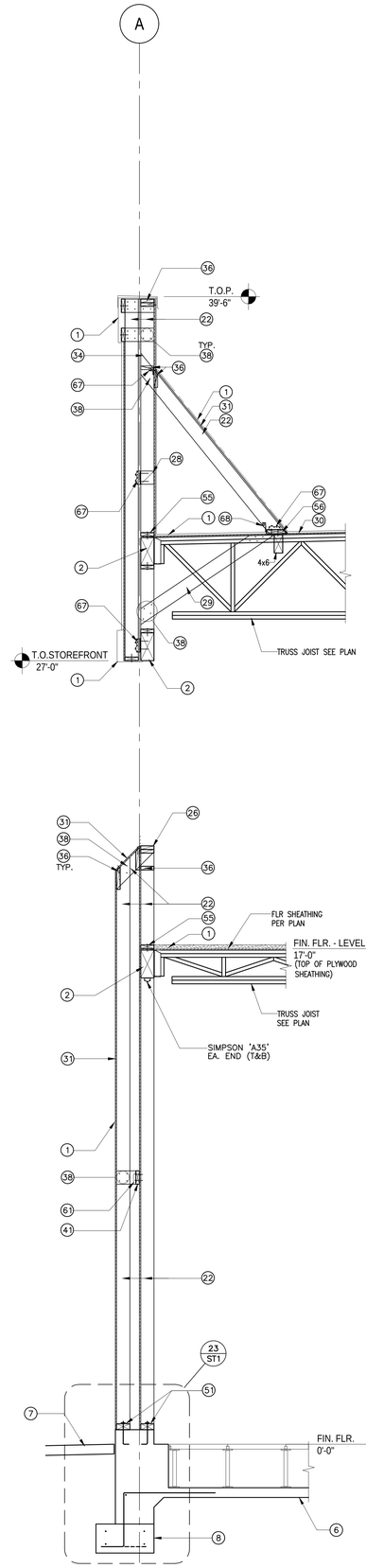

SECTION | REF: 3/A411 | SCALE 1/2"=1'-0" | B

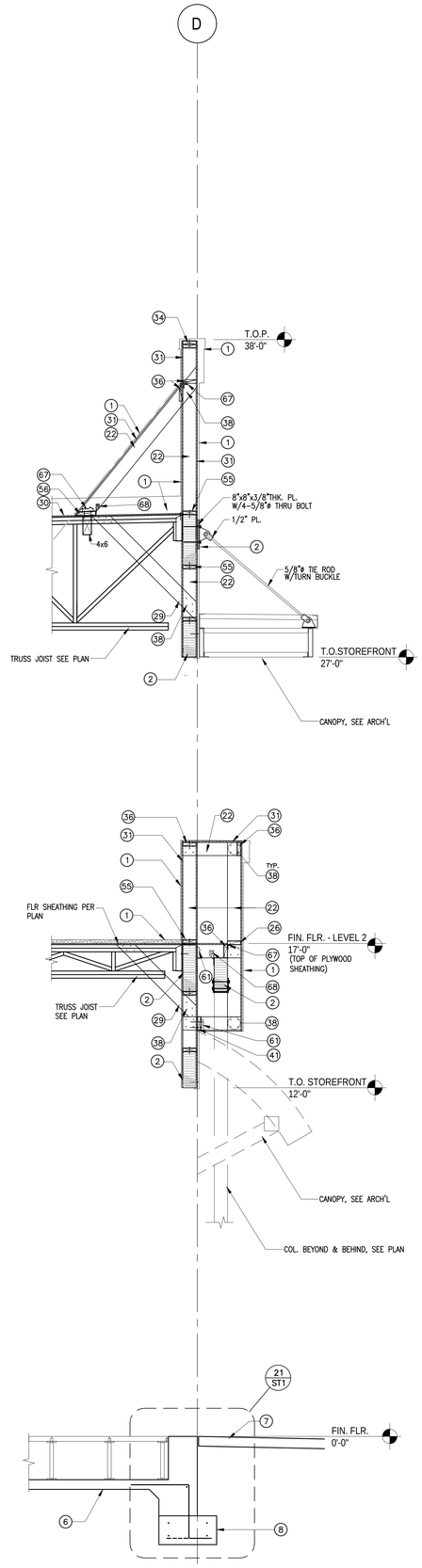

SECTION | REF: 2/A411 | SCALE 1/2"=1'-0" | A

LEGEND

GENERAL

1. FOR FIN SEE ARCH'L
2. BEAM SEE PLAN FOR SIZE
3. ROOF FRAMING, SEE PLAN
4. COLUMN, SEE PLAN FOR SIZE & LOC.
5. CRIPPLE COLUMN SEE PLAN FOR SIZE
6. CONCRETE SLAB, SEE PLAN FOR SUB-BASE & REINF.
7. CONCRETE SIDEWALK, SEE ARCH'L FOR FINISH AND JOINT LOC.
8. CONCRETE FOOTING, SEE PLAN FOR SIZE & REINF.
9. CONCRETE BASE W/ #4 DOWELSx L @ 12" O.C. ALONG PERIMETER & #3 TIES @ 8" O.C. 2-#3 TIES @ 2" O.C. AT TOP
10. CONCRETE CURB W/ 1-#4 CONT. U.N.O.
11. 8" CMU WALL (SOLID GROUT) SEE PLAN AND DETAILS FOR REINF.
12. #4x 24"/8"T @ 24" O.C.
13. 8" CMU LINTEL W/ 4-#6 HORIZ. @ 8" O.C.

WOOD FRAMING

21. 2x4 @ 16" O.C.
22. 2x6 @ 16" O.C.
23. 2x8 @ 16" O.C.
24. 2x10 @ 16" O.C.
25. 2x12 @ 16" O.C.
26. 2x BLOCKING
27. 4x BLOCKING
28. 6x BLOCKING
29. 2x6 BRACE @ 48" O.C. W/ 4-16d EA. END
30. ROOF SHEATHING SEE PLAN
31. 1/2" PLYWD. CDX W/ 10d @ 6:12
32. 1/2" PLYWD. CDX W/ 10d @ 4;6:12 BLOCK ALL PLYWD. EDGES
33. 5/8" PLYWD. STRUCTURAL I W/ 10d @ 6;12 O.C. (UNBLOCK)
34. 2-2x CONT. TOP PLATE
35. BOUNDARY NAILING
36. BOUNDARY NAILING W/ BLOCKING
37. BOUNDARY NAILING W/ BLOCKING & 'A35' @ 16" O.C.
38. 4-16d TYP. U.N.O.
39. 6-16d TYP. U.N.O.

WOOD FRAMING (LEDGERS)

41. 2x CONT. WOOD LEDGER W/ 3-16d @ 16" O.C.
42. 3x CONT. WOOD LEDGER W/ 3/4"ø A.B. @ 16" O.C.
43. 4x CONT. WOOD LEDGER W/ 3/4"ø A.B. @ 16" O.C.
44. 3x CONT. WOOD LEDGER W/ 5/8"øx 5" LG. LAG SCREW @ 16" O.C.

WOOD FRAMING (PLATES)

51. 2x CONT. SILL PL. W/ 5/8"ø A.B. @ 24" O.C. (9" MAX. FROM EA. END)
52. 2x CONT. SILL PLATE W/ 5/8"ø A.B. @ 32" O.C. (9" MAX. FROM EA. END)
53. 2x CONT. SILL PLATE W/ 5/8"ø R.H. @ 24" O.C. (9" MAX. FROM EA. END)
54. 2x CONT. SILL PLATE W/ HILTI POWER PIN .145x3" LG. @ 32" O.C. (ICBO No.1290)
55. 2x CONT. SILL PLATE W/ 16d @ 4" O.C.
56. 2x CONT. SILL PLATE W/ 2-16d @ 8" O.C.
57. 3x WOOD NAILER P/T W/ 5/8"ø A.B. @ 24" O.C.
58. 4x WOOD NAILER W/ 3/4"ø WELD STUD @ 24" O.C.

WOOD FRAMING (CONNECTORS)

61. SIMPSON 'U' HANGER
62. SIMPSON 'LB' HANGER
63. SIMPSON 'CLT' HANGER
64. SIMPSON 'HW' HANGER
65. SIMPSON 'ST22' STRAP @ 48" O.C. @ 48" O.C.
66. SIMPSON 'PATM-25' @ 48" O.C. @ 48" O.C.
67. SIMPSON 'A35' CONNECTOR @ 16" O.C.
68. SIMPSON 'H2.5' CONNECTOR @ 16" O.C.
69. SIMPSON 'LTP4' CONNECTOR @ 16" O.C.

METAL FRAMING

71. 3-#10 SCREWS TYP. U.N.O.
72. 4-#10 SCREWS TYP. U.N.O.
73. 1 1/4"x 4"x 18GA. METAL STUD @ 16" O.C.
74. 1 3/8"x 8"x 18GA. METAL STUD @ 16" O.C.
75. 1 3/8"x 8"c 18GA. METAL STUD @ 16" O.C.
76. 1 3/8"x 6"x 18GA. BRACE @ 48" O.C. W/ 4-#10 SCREWS EA. END
77. 1/2" PLYWD. CDX W/ #10 METAL SCREWS @ 6;12
78. 1/2" PLYWD. CDX W/ #10 METAL SCREWS @ 4;6;12
79. 5/8" PLYWD. STRUCTURAL I W/ #10 METAL SCREWS @ 6;12 O.C.
80. METAL DECK, SEE PLAN FOR SIZE & DIRECTION
81. UPSIDE DOWN CHANNEL, SEE PLAN FOR SIZE & LOC.
82. UNPUNCHED DEEP LEG MTL TRACK OR SLOTTED TRACK TYP
83. 16GA. CONT. METAL TRACK OR SLOTTED TRACK TYP
84. 16GA. METAL TRACK BLOCKING
85. 18GA. METAL STUD BLOCKING SCREWS TO EA. STUD
86. 18GA. METAL STUD W/ 3-#10 METAL SCREWS TO EA. STUD
87. 14GA. CONT. METAL TRACK W/ 3/4"ø A.B. @ 16" O.C. (LEDGER)
88. 14GA. CONT. METAL TRACK W/ 3/4"ø R.H. @ 16" O.C. (LEDGER)
89. 14GA. CONT. METAL TRACK W/ SHOTPIN @ 8" O.C. (LEDGER)
90. 14GA. CONT. METAL TRACK W/ 5/8"ø LAG SCREWx4" LG. @ 16" O.C. (LEDGER)
91. 16GA. CONT. METAL TRACK W/ #10 SCREWS @ 16" O.C. (SILL PL)
92. 16GA. CONT. METAL TRACK W/ 2-#10 SCREWS @ 24" O.C. (SILL PL)
93. 16GA. CONT. METAL TRACK W/2- SELF TAPPING SCREWS @ 16" O.C. (SILL PL)
94. 16GA. CONT. METAL TRACK W/ 5/8"ø A.B. @ 16" O.C. (SILL PL.)
95. L5x5x3/8 BRACE @ EA. TRUSS 1-1"ø M.B. TO ANGLE
96. L5x5x3/8x 12" LG. W/ 2-3/4"ø A.B.
97. 14GA. CLIP ANGLE W/ 3-#10 METAL SCREWS TO STUD @ 16" O.C. (WELD TO VERT. OR HORIZ. SUPPORT)
98. 14GA. CLIP ANGLE W/ 3-#10 METAL SCREWS TO STUD @ 16" O.C. EA. SIDE
99. 14GA. CLIP ANGLE W/ SHOTPIN TO CMU WALL @ 16" O.C.
100. BEND STUD LEG W/ 2-#10 METAL SCREWS TO STUD @ 16" O.C.
101. BENT STUD LEG W/ SHOTPIN TO CMU WALL @ 16" O.C.
102. 5"x5"x5"WIDEx 14GA. CLIP ANGLE W/ 3-#10 METAL SCREWS EA. DIRECTION
103. 16 GA. NAIL STRIP TYP.

ktgy

17911 Von Karman Ave.
Suite 200
Irvine, CA 92614
ktgy.com
949.851.2133

ktgy Project Number

Contact	DORINA WATSON
Email	dwatson@ktgy.com
Senior Director	DAVID SCHMITZ
Designer	RUSSEL ROSALES

Developer
SEDC
23906 SOBOBA ROAD
SAN JACINTO, CA 92581

PHONE: (951) 663-2058

SOBOBA SOVOVATUM VILLAGE PHASE-2

SAN JACINTO, CA

No.	DATE	DESCRIPTION
	5/22/2026	FOR BID

Client is responsible for notifying architect in writing for any discovered errors or omissions in the plans and specifications during construction of the project. Failure for Client to notify Architect of any known errors or omissions in the plans or specifications, and proceeding with constructing the portion of work shown in the plans or specifications containing known errors or omissions shall be a waiver by Client for any liability of Architect for such known errors or omissions. Client releases Architect for any liability for such portions of work, and Architect shall not be liable for any delay damages, change orders, repair costs, removal or demolition costs, or replacement of any such portions of work.

REGISTERED PROFESSIONAL ENGINEER
ANDY M. YU
NO. 025817
EXP. 12-31-27
CIVIL
STATE OF CALIFORNIA

ANF & ASSOCIATES, INC.
T: (626) 448-8182
F: (626) 448-8092
Consulting Structural Engineers E: anf1688@anfstructural.com
JOB# 025817.11
923 East Valley Blvd., Suite 268, San Gabriel, CA 91776

Sheet_Name

2-STORY BUILDING
WALL SECTIONS

2026-05-26, ISSUED FOR BID

S3.0

Printed: 1/7/2026 4:29:08 PM

COPYRIGHT 2024 KTGY GROUP INC. These plans and specifications are protected by United States copyright law and may not be used, reproduced, distributed, transmitted, displayed, or modified in any way without the prior written consent of KTGY Group, Inc. or the authorized copyright holder or licensee.

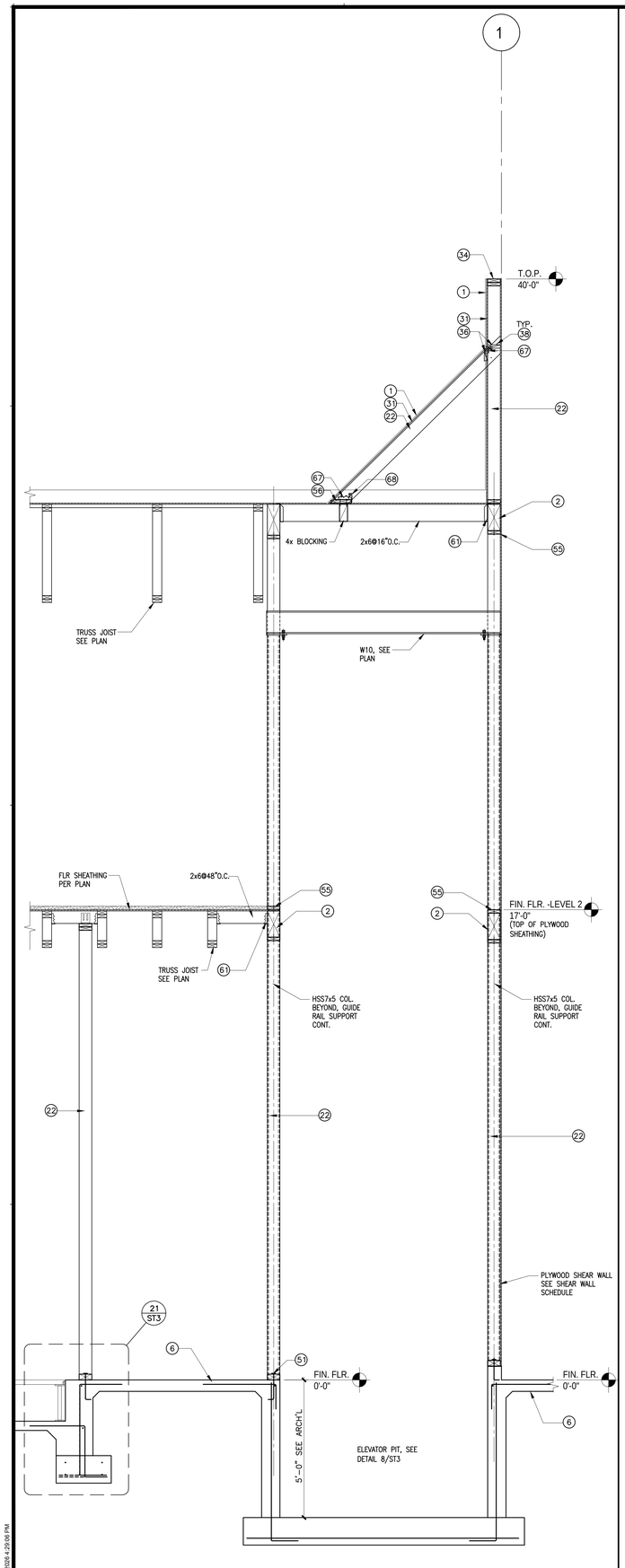

SECTION | REF: 2/A513 | SCALE 1/2"=1'-0" | C

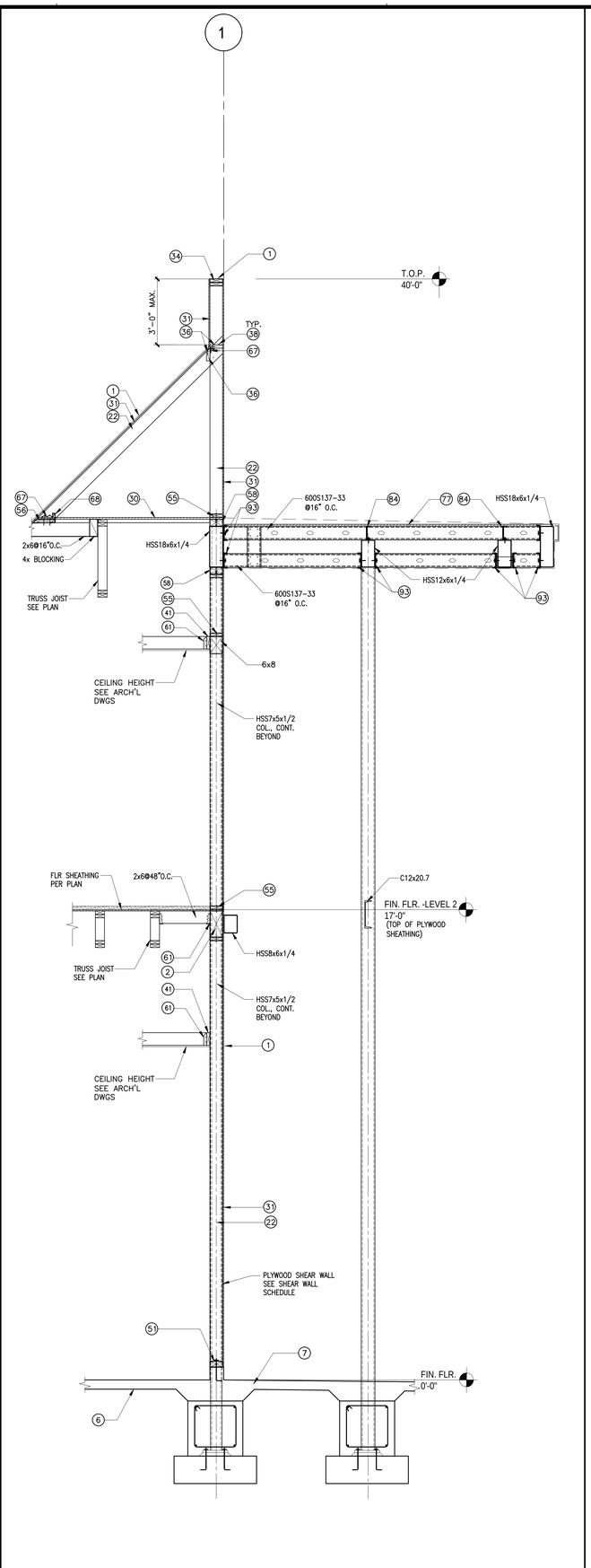

SECTION | REF: 1/A412 | SCALE 1/2"=1'-0" | B

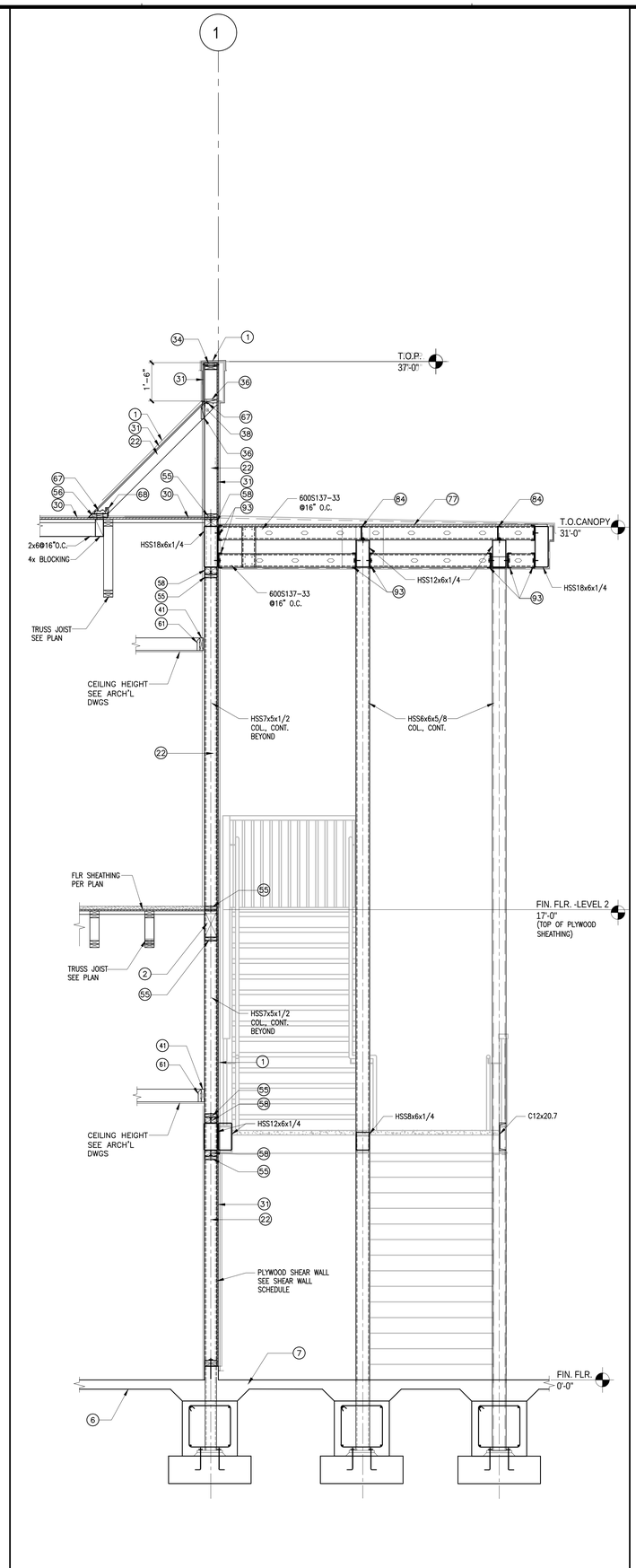

SECTION | REF: 5/A411 | SCALE 1/2"=1'-0" | A

LEGEND

GENERAL

1. FOR FIN SEE ARCH'L
2. BEAM SEE PLAN FOR SIZE
3. ROOF FRAMING, SEE PLAN
4. COLUMN, SEE PLAN FOR SIZE & LOC.
5. CRIPPLE COLUMN SEE PLAN FOR SIZE
6. CONCRETE SLAB, SEE PLAN FOR SUB-BASE & REINF.
7. CONCRETE SIDEWALK, SEE ARCH'L FOR FINISH AND JOINT LOC.
8. CONCRETE FOOTING, SEE PLAN FOR SIZE & REINF.
9. CONCRETE BASE W/ #4 DOWELSx L @ 12" O.C. ALONG PERIMETER & #3 TIES @ 8" O.C. 2-#3 TIES @ 2" O.C. AT TOP
10. CONCRETE CURB W/ 1-#4 CONT. U.N.O.
11. 8" CMU WALL (SOLID GROUT) SEE PLAN AND DETAILS FOR REINF.
12. #4x 24"/8"T @ 24" O.C.
13. 8" CMU LINTEL W/ 4-#6 HORIZ. @ 8" O.C.

WOOD FRAMING

21. 2x4 @ 16" O.C.
22. 2x6 @ 16" O.C.
23. 2x8 @ 16" O.C.
24. 2x10 @ 16" O.C.
25. 2x12 @ 16" O.C.
26. 2x BLOCKING
27. 4x BLOCKING
28. 6x BLOCKING
29. 2x6 BRACE @ 48" O.C. W/ 4-16d EA. END
30. ROOF SHEATHING SEE PLAN
31. 1/2" PLYWD. CDX W/ 10d @ 6:12
32. 1/2" PLYWD. CDX W/ 10d @ 4;6:12 BLOCK ALL PLYWD. EDGES
33. 5/8" PLYWD. STRUCTURAL I W/ 10d @ 6:12 O.C. (UNBLOCK)
34. 2-2x CONT. TOP PLATE
35. BOUNDARY NAILING
36. BOUNDARY NAILING W/ BLOCKING
37. BOUNDARY NAILING W/ BLOCKING & 'A35' @ 16" O.C.
38. 4-16d TYP. U.N.O.
39. 6-16d TYP. U.N.O.

WOOD FRAMING (LEDGERS)

41. 2x CONT. WOOD LEDGER W/ 3-16d @ 16" O.C.
42. 3x CONT. WOOD LEDGER W/ 3/4"ø A.B. @ 16" O.C.
43. 4x CONT. WOOD LEDGER W/ 3/4"ø A.B. @ 16" O.C.
44. 3x CONT. WOOD LEDGER W/ 5/8"øx 5" LG. LAG SCREW @ 16" O.C.

WOOD FRAMING (PLATES)

51. 2x CONT. SILL PL. W/ 5/8"ø A.B. @ 24" O.C. (9" MAX. FROM EA. END)
52. 2x CONT. SILL PLATE W/ 5/8"ø A.B. @ 32" O.C. (9" MAX. FROM EA. END)
53. 2x CONT. SILL PLATE W/ 5/8"ø R.H. @ 24" O.C. (9" MAX. FROM EA. END)
54. 2x CONT. SILL PLATE W/ HILTI POWER PIN .145x3" LG. @ 32" O.C. (ICBO No.1290)
55. 2x CONT. SILL PLATE W/ 16d @ 4" O.C.
56. 2x CONT. SILL PLATE W/ 2-16d @ 8" O.C.
57. 3x WOOD NAILER P/T W/ 5/8"ø A.B. @ 24" O.C.
58. 4x WOOD NAILER W/ 3/4"ø WELD STUD @ 24" O.C.

WOOD FRAMING (CONNECTORS)

61. SIMPSON 'U' HANGER
62. SIMPSON 'LB' HANGER
63. SIMPSON 'CLT' HANGER
64. SIMPSON 'HW' HANGER
65. SIMPSON 'ST22' STRAP @ 48" O.C. @ 48" O.C.
66. SIMPSON 'PATM-25' @ 48" O.C. @ 48" O.C.
67. SIMPSON 'A35' CONNECTOR @ 16" O.C.
68. SIMPSON 'H2.5' CONNECTOR @ 16" O.C.
69. SIMPSON 'LTP4' CONNECTOR @ 16" O.C.

METAL FRAMING

71. 3-#10 SCREWS TYP. U.N.O.
72. 4-#10 SCREWS TYP. U.N.O.
73. 1 1/4"x 4"x 18GA. METAL STUD @ 16" O.C.
74. 1 3/8"x 8"x 18GA. METAL STUD @ 16" O.C.
75. 1 3/8"x 8"c 18GA. METAL STUD @ 16" O.C.
76. 1 3/8"x 6"x 18GA. BRACE @ 48" O.C. W/ 4-#10 SCREWS EA. END
77. 1/2" PLYWD. CDX W/ #10 METAL SCREWS @ 6;12
78. 1/2" PLYWD. CDX W/ #10 METAL SCREWS @ 4;6;12
79. 5/8" PLYWD. STRUCTURAL I W/ #10 METAL SCREWS @ 6;12 O.C.
80. METAL DECK, SEE PLAN FOR SIZE & DIRECTION
81. UPSIDE DOWN CHANNEL, SEE PLAN FOR SIZE & LOC.
82. UNPUNCHED DEEP LEG MTL TRACK OR SLOTTED TRACK TYP
83. 16GA. CONT. METAL TRACK OR SLOTTED TRACK TYP
84. 16GA. METAL TRACK BLOCKING
85. 18GA. METAL STUD BLOCKING SCREWS TO EA. STUD
86. 18GA. METAL STUD W/ 3-#10 METAL SCREWS TO EA. STUD
87. 14GA. CONT. METAL TRACK W/ 3/4"ø A.B. @ 16" O.C. (LEDGER)
88. 14GA. CONT. METAL TRACK W/ 3/4"ø R.H. @ 16" O.C. (LEDGER)
89. 14GA. CONT. METAL TRACK W/ SHOTPIN @ 8" O.C. (LEDGER)
90. 14GA. CONT. METAL TRACK W/ 5/8"ø LAG SCREW4" LG. @ 16" O.C. (LEDGER)
91. 16GA. CONT. METAL TRACK W/ #10 SCREWS @ 16" O.C. (SILL PL)
92. 16GA. CONT. METAL TRACK W/ 2-#10 SCREWS @ 24" O.C. (SILL PL)
93. 16GA. CONT. METAL TRACK W/2- SELF TAPPING SCREWS @ 16" O.C. (SILL PL)
94. 16GA. CONT. METAL TRACK W/ 5/8"ø A.B. @ 16" O.C. (SILL PL.)
95. L5x5x3/8 BRACE @ EA. TRUSS 1-1"ø M.B. TO ANGLE
96. L5x5x3/8x 12" LG. W/ 2-3/4"ø A.B.
97. 14GA. CLIP ANGLE W/ 3-#10 METAL SCREWS TO STUD @ 16" O.C. (WELD TO VERT. OR HORIZ. SUPPORT)
98. 14GA. CLIP ANGLE W/ 3-#10 METAL SCREWS TO STUD @ 16" O.C. EA. SIDE
99. 14GA. CLIP ANGLE W/ SHOTPIN TO CMU WALL @ 16" O.C.
100. BEND STUD LEG W/ 2-#10 METAL SCREWS TO STUD @ 16" O.C.
101. BENT STUD LEG W/ SHOTPIN TO CMU WALL @ 16" O.C.
102. 5"x5"x5"WIDEx 14GA. CLIP ANGLE W/ 3-#10 METAL SCREWS EA. DIRECTION
103. 16 GA. NAIL STRIP TYP.

ktgy

17911 Von Karman Ave.
Suite 200
Irvine, CA 92614
ktgy.com
949.851.2133

ktgy Project Number

Contact	DORINA WATSON
Email	dwatson@ktgy.com
Senior Director	DAVID SCHMITZ
Designer	RUSSEL ROSALES

Developer
SEDC
23906 SOBOBA ROAD
SAN JACINTO, CA 92581

PHONE: (951) 663-2058

SOBOBA SOVOVATUM VILLAGE PHASE-2

SAN JACINTO, CA

No.	DATE	DESCRIPTION
	5/22/2026	FOR BID

Client is responsible for notifying architect in writing for any discovered errors or omissions in the plans and specifications during construction of the project. Failure for Client to notify Architect of any known errors or omissions in the plans or specifications, and proceeding with constructing the portion of work shown in the plans or specifications containing known errors or omissions shall be a waiver by Client for any liability of Architect for such known errors or omissions. Client releases Architect for any liability for such portions of work, and Architect shall not be liable for any delay damages, change orders, repair costs, removal or demolition costs, or replacement of any such portions of work.

REGISTERED PROFESSIONAL ENGINEER
ANDY M. YU
NO. 025812
EXP. 12-31-27
CIVIL
STATE OF CALIFORNIA

ANF & ASSOCIATES, INC.
T: (626) 448-8182
F: (626) 448-8092
Consulting Structural Engineers E: anf1688@anfstructural.com
JOB# 025817.11
923 East Valley Blvd., Suite 268, San Gabriel, CA 91776

Sheet_Name

2-STORY BUILDING
WALL SECTIONS

2026-05-26, ISSUED FOR BID

S3.1

Printed: 1/7/2026 4:29:08 PM

COPYRIGHT 2024 KTGY GROUP INC. These plans and specifications are protected by United States copyright law and may not be used, reproduced, distributed, transmitted, displayed, or modified in any way without the prior written consent of KTGY Group, Inc. or the authorized copyright holder or licensee.

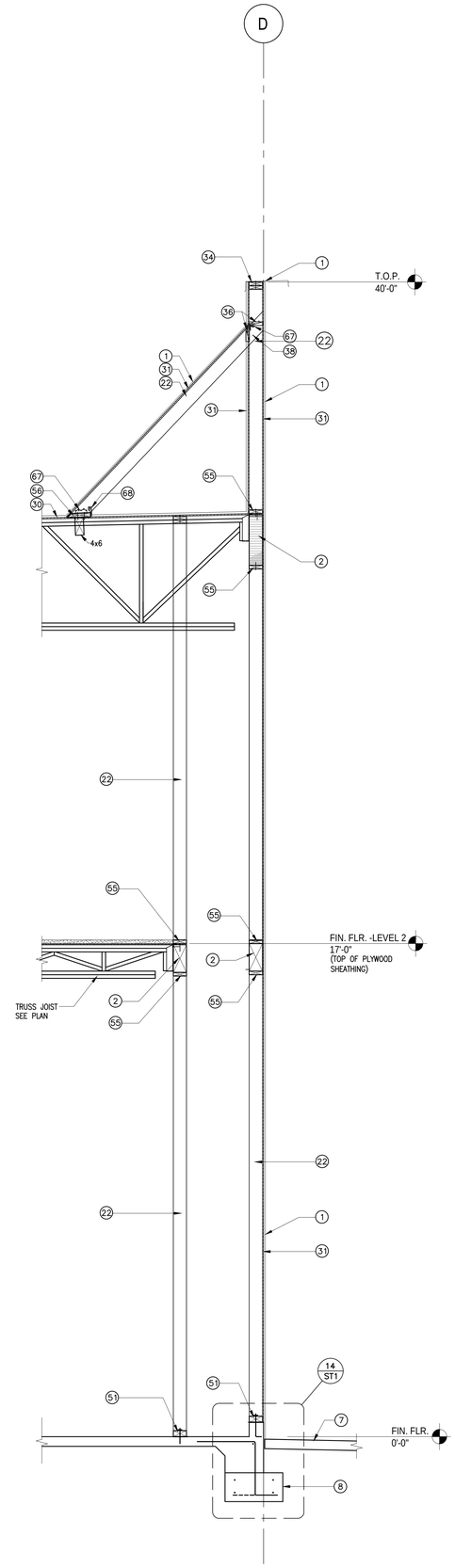

SECTION REF: 1/A-411 SCALE 1/2"=1'-0" A

SCALE 1/2"=1'-0" B

SCALE 1/2"=1'-0" C

LEGEND

GENERAL

1. FOR FIN SEE ARCH'L
2. BEAM SEE PLAN FOR SIZE
3. ROOF FRAMING, SEE PLAN
4. COLUMN, SEE PLAN FOR SIZE & LOC.
5. CRIPPLE COLUMN SEE PLAN FOR SIZE
6. CONCRETE SLAB, SEE PLAN FOR SUB-BASE & REINF.
7. CONCRETE SIDEWALK, SEE ARCH'L FOR FINISH AND JOINT LOC.
8. CONCRETE FOOTING, SEE PLAN FOR SIZE & REINF.
9. CONCRETE BASE W/ #4 DOWELSx L @ 12" O.C. ALONG PERIMETER & #3 TIES @ 8" O.C. 2-#3 TIES @ 2" O.C. AT TOP
10. CONCRETE CURB W/ 1-#4 CONT. U.N.O.
11. 8" CMU WALL (SOLID GROUT) SEE PLAN AND DETAILS FOR REINF.
12. #4x 24"/8" @ 24" O.C.
13. 8" CMU LINTEL W/ 4-#6 HORIZ. @ 8" O.C.

WOOD FRAMING

21. 2x4 @ 16" O.C.
22. 2x6 @ 16" O.C.
23. 2x8 @ 16" O.C.
24. 2x10 @ 16" O.C.
25. 2x12 @ 16" O.C.
26. 2x BLOCKING
27. 4x BLOCKING
28. 6x BLOCKING
29. 2x6 BRACE @ 48" O.C. W/ 4-16d EA. END
30. ROOF SHEATHING SEE PLAN
31. 1/2" PLYWD. CDX W/ 10d @ 6:12
32. 1/2" PLYWD. CDX W/ 10d @ 4;6:12 BLOCK ALL PLYWD. EDGES
33. 5/8" PLYWD. STRUCTURAL I W/ 10d @ 6:12 O.C. (UNBLOCK)
34. 2-2x CONT. TOP PLATE
35. BOUNDARY NAILING
36. BOUNDARY NAILING W/ BLOCKING
37. BOUNDARY NAILING W/ BLOCKING & 'A35' @ 16" O.C.
38. 4-16d TYP. U.N.O.
39. 6-16d TYP. U.N.O.

WOOD FRAMING (LEDGERS)

41. 2x CONT. WOOD LEDGER W/ 3-16d @ 16" O.C.
42. 3x CONT. WOOD LEDGER W/ 3/4"ø A.B. @ 16" O.C.
43. 4x CONT. WOOD LEDGER W/ 3/4"ø A.B. @ 16" O.C.
44. 3x CONT. WOOD LEDGER W/ 5/8"øx 5" LG. LAG SCREW @ 16" O.C.

WOOD FRAMING (PLATES)

51. 2x CONT. SILL PL. W/ 5/8"ø A.B. @ 24" O.C. (9" MAX. FROM EA. END)
52. 2x CONT. SILL PLATE W/ 5/8"ø A.B. @ 32" O.C. (9" MAX. FROM EA. END)
53. 2x CONT. SILL PLATE W/ 5/8"ø R.H. @ 24" O.C. (9" MAX. FROM EA. END)
54. 2x CONT. SILL PLATE W/ HILTI POWER PIN .145x3" LG. @ 32" O.C. (ICBO No.1290)
55. 2x CONT. SILL PLATE W/ 16d @ 4" O.C.
56. 2x CONT. SILL PLATE W/ 2-16d @ 8" O.C.
57. 3x WOOD NAILER P/T W/ 5/8"ø A.B. @ 24" O.C.
58. 4x WOOD NAILER W/ 3/4"ø WELD STUD @ 24" O.C.

WOOD FRAMING (CONNECTORS)

61. SIMPSON 'U' HANGER
62. SIMPSON 'LB' HANGER
63. SIMPSON 'GLT' HANGER
64. SIMPSON 'HW' HANGER
65. SIMPSON 'ST22' STRAP @ 48" O.C. @ 48" O.C.
66. SIMPSON 'PATM-25' @ 48" O.C. @ 48" O.C.
67. SIMPSON 'A35' CONNECTOR @ 16" O.C.
68. SIMPSON 'H2.5' CONNECTOR @ 16" O.C.
69. SIMPSON 'LTP4' CONNECTOR @ 16" O.C.

METAL FRAMING

71. 3-#10 SCREWS TYP. U.N.O.
72. 4-#10 SCREWS TYP. U.N.O.
73. 1 1/4"x 4"x 18GA. METAL STUD @ 16" O.C.
74. 1 3/8"x 6"x 18GA. METAL STUD @ 16" O.C.
75. 1 3/8"x 8"c 18GA. METAL STUD @ 16" O.C.
76. 1 3/8"x 6"x 18GA. BRACE @ 48" O.C. W/ 4-#10 SCREWS EA. END
77. 1/2" PLYWD. CDX W/ #10 METAL SCREWS @ 6;12
78. 1/2" PLYWD. CDX W/ #10 METAL SCREWS @ 4;6;12
79. 5/8" PLYWD. STRUCTURAL I W/ #10 METAL SCREWS @ 6;12 O.C.
80. METAL DECK, SEE PLAN FOR SIZE & DIRECTION
81. UPSIDE DOWN CHANNEL, SEE PLAN FOR SIZE & LOC.
82. UNPUNCHED DEEP LEG MTL TRACK OR SLOTTED TRACK TYP
83. 16GA. CONT. METAL TRACK OR SLOTTED TRACK TYP
84. 16GA. METAL TRACK BLOCKING
85. 18GA. METAL STUD BLOCKING SCREWS TO EA. STUD
86. 18GA. METAL STUD W/ 3-#10 METAL SCREWS TO EA. STUD
87. 14GA. CONT. METAL TRACK W/ 3/4"ø A.B. @ 16" O.C. (LEDGER)
88. 14GA. CONT. METAL TRACK W/ 3/4"ø R.H. @ 16" O.C. (LEDGER)
89. 14GA. CONT. METAL TRACK W/ SHOTPIN @ 8" O.C. (LEDGER)
90. 14GA. CONT. METAL TRACK W/ 5/8"ø LAG SCREW4" LG. @ 16" O.C. (LEDGER)
91. 16GA. CONT. METAL TRACK W/ #10 SCREWS @ 16" O.C. (SILL PL)
92. 16GA. CONT. METAL TRACK W/ 2-#10 SCREWS @ 24" O.C. (SILL PL)
93. 16GA. CONT. METAL TRACK W/2- SELF TAPPING SCREWS @ 16" O.C. (SILL PL)
94. 16GA. CONT. METAL TRACK W/ 5/8"ø A.B. @ 16" O.C. (SILL PL.)
95. L5x5x3/8 BRACE @ EA. TRUSS 1-1"ø M.B. TO ANGLE
96. L5x5x3/8x 12" LG. W/ 2-3/4"ø A.B.
97. 14GA. CLIP ANGLE W/ 3-#10 METAL SCREWS TO STUD @ 16" O.C. (WELD TO VERT. OR HORIZ. SUPPORT)
98. 14GA. CLIP ANGLE W/ 3-#10 METAL SCREWS TO STUD @ 16" O.C. EA. SIDE
99. 14GA. CLIP ANGLE W/ SHOTPIN TO CMU WALL @ 16" O.C.
100. BEND STUD LEG W/ 2-#10 METAL SCREWS TO STUD @ 16" O.C.
101. BENT STUD LEG W/ SHOTPIN TO CMU WALL @ 16" O.C.
102. 5"x5"x5"WIDEx 14GA. CLIP ANGLE W/ 3-#10 METAL SCREWS EA. DIRECTION
103. 16 GA. NAIL STRIP TYP.

ktgy

17911 Von Karman Ave.
Suite 200
Irvine, CA 92614
ktgy.com
949.851.2133

ktgy Project Number

Contact	DORINA WATSON
Email	dwatson@ktgy.com
Senior Director	DAVID SCHMITZ
Designer	RUSSEL ROSALES

Developer
SEDC
23906 SOBOBA ROAD
SAN JACINTO, CA 92581

PHONE: (951) 663-2058

SOBOBA SOVOVATUM VILLAGE PHASE-2

SAN JACINTO, CA

No.	DATE	DESCRIPTION
	5/22/2026	FOR BID

Client is responsible for notifying architect in writing for any discovered errors or omissions in the plans and specifications during construction of the project. Failure for Client to notify Architect of any known errors or omissions in the plans or specifications, and proceeding with constructing the portion of work shown in the plans or specifications containing known errors or omissions shall be a waiver by Client for any liability of Architect for such known errors or omissions. Client releases Architect for any liability for such portions of work, and Architect shall not be liable for any delay damages, change orders, repair costs, removal or demolition costs, or replacement of any such portions of work.

REGISTERED PROFESSIONAL ENGINEER
ANDY M. YU
NO. 025817
EXP. 12-31-27
CIVIL
STATE OF CALIFORNIA

ANF & ASSOCIATES, INC.
Consulting Structural Engineers
T: (626) 448-8182
F: (626) 448-8092
E: anf1688@anfstructural.com
JOB# 025817.11
923 East Valley Blvd., Suite 268, San Gabriel, CA 91776

Sheet_Name

2-STORY BUILDING WALL SECTIONS

S3.2

2026-05-26, ISSUED FOR BID

Printed: 1/7/2026 4:29:08 PM

COPYRIGHT 2024 KTGY GROUP INC. These plans and specifications are protected by United States copyright law and may not be used, reproduced, distributed, transmitted, displayed, or modified in any way without the prior written consent of KTGY Group, Inc. or the authorized copyright holder or licensee.

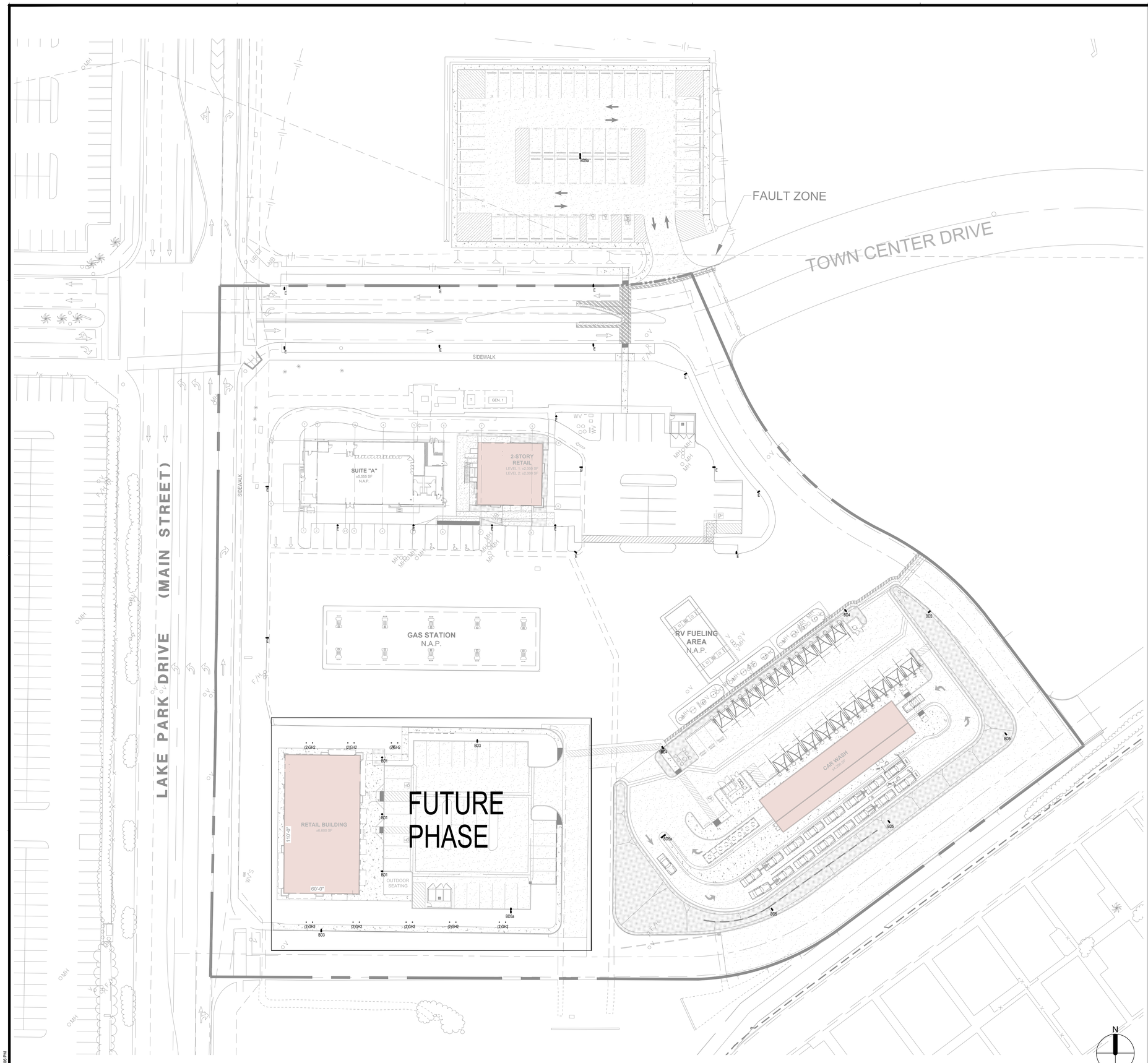

SITE LIGHTING PLAN | SCALE: 1"=30' | 5

Printed: 1/7/2026 4:29:06 PM

COPYRIGHT 2024 KTGY GROUP INC. These plans and specifications are protected by United States copyright law and may not be used, reproduced, distributed, transmitted, displayed, or modified in any way without the prior written consent of KTGY Group, Inc. or the authorized copyright holder or licensee.

ktgy

17911 Von Karman Ave.
Suite 200
Irvine, CA 92614
ktgy.com
949.851.2133

ktgy Project Number

Contact	DORINA WATSON
Email	dwatson@ktgy.com
Senior Director	DAVID SCHMITZ
Designer	RUSSEL ROSALES

Lighting Consultant

LIGHTING DESIGN ALLIANCE

A Sales O'Brien Company

2830 TEMPLE AVE. LONG BEACH, CA 90806-2213, USA
T: 562.989.3843 - W: LightingDesignAlliance.com

SOBOBA SOVOVATUM VILLAGE PHASE-2

SITE IMPROVEMENT

-
SAN JACINTO, CA

No.	DATE	DESCRIPTION
	5/22/2026	For Bid

Client is responsible for notifying architect in writing for any discovered errors or omissions in the plans and specifications during construction of the project. Failure for Client to notify Architect of any known errors or omissions in the plans or specifications, and proceeding with constructing the portion of work shown in the plans or specifications containing known errors or omissions shall be a waiver by Client for any liability of Architect for such known errors or omissions. Client releases Architect for any liability for such portions of work, and Architect shall not be liable for any delay damages, change orders, repair costs, removal or demolition costs, or replacement of any such portions of work.

2026-05-26, ISSUED FOR BID

Sheet_Name
SITE LIGHTING PLAN

LD 0.1

LIGHTING FIXTURE NOTES:

1. Luminaires, components, and installation shall be in accordance with the American National Standards Institute (ANSI), the latest revision of the National Electrical Code (NEC), Occupational Safety and Health Administration (OSHA), and all applicable federal, state, and local codes and regulations. Fixtures shall include all accessories for installation as required by national or local electrical codes.
2. All work shall be done in a neat, professional manner in accordance with ANSI/NECA 1-2015.
3. The Architect and Lighting Designer shall approve fixture substitutions prior to bid, in accordance with section 26 00 00 specifications. If non-specified or non-approved alternates are installed, they shall be replaced at the Contractors sole expense (including backcharges by other trades such as drywall, painting, etc.), with no additional cost to the owner.
4. Electrical Engineer to determine all fixture voltages.
5. Electrical Engineer shall be responsible for emergency lighting, calculations and circuiting to meet code conformance as required by law.
6. Contractor shall be responsible for the following:
   a. Verify all fixtures have appropriate UL, ETL or other recognized and accepted testing agency for dry, damp, or wet location installation as required by national or local electrical codes,
   b. Verify final fixture voltages,
   c. Verify fixture location and above-ceiling clearances for recessed fixtures. Contractor shall notify the Lighting Designer of any conflicts,
   d. Verify housing and trim compatibility with ceiling type (e.g. gyp. or suspended ceiling) and ceiling thickness,
   e. Verify field lengths of cove or perimeter lighting. These fixtures must not be dimensioned from lighting plans,
   f. Identify fire rated ceiling or floor assemblies and provide fire rated enclosures for fixtures to be installed in these conditions,
   g. Identify insulated ceiling areas and provide IC rated housing options for fixtures to be installed in these conditions. Contractor shall notify the Lighting Designer if an IC option is not available for the specified fixture(s).
7. All remote power supplies:
   a. To be mounted in an accessible, concealed, dry, well-ventilated location, within manufacturer recommendations and distance,
   b. All fixtures on a control zone to have equal length wire to the power supply.
   c. Contractor to provide fully code compliant LED system, Contractor to coordinate any necessary additional parts or enclosures (such as NEMA rated enclosures) for the power supply and fixtures to be code compliant.
8. FF&E lighting may be shown in this schedule for convenience to communicate lamping, wattage, dimming, etc., but refer to the Interior Design schedule for the most accurate and up-to-date information.
9. Dimmer types may operate over power lines (Triac, MLV, ELV) or require additional control wires (0-10V, DMX, DALI). If there are fixture substitutions, it is expected that the dimmer type will still be provided as specified. In the case that it is also substituted, ensure that the change is noted and carried through to the dimming equipment and wiring.
10. Dimmer types explained in greater detail in the Control Intent Schedule notes.
11. Estimate quantity shown is total units (for typical lighting fixtures) or linear foot (for linear lighting fixtures)

TYPE	DESCRIPTION	LOCATION	MANUFACTURER & CATALOG #	LIGHT SOURCE	WATTS	VOLTAGE	LOAD TYPE	DIM TYPE	REMARKS
BD1	Pedestrian-scale post-top area light mounted on 12ft pole, with decorative pole base, and: •Finish: Verify with Architect IP Rating: IP66 Optics: IES type 3	Site	LSI ENMA - LED - 3 - PT - 10L - 30 - UNV - finish / SRP-mounting method / 1SOTQ - 12 - mounting.config - finish - GA / GBC-45-finish	Integral LED CCT: 3000K CRI: 70 Lumens: 9367 (Delivered)	78W	Per EE (Integral)	LED	TBD	Verify voltage with EE. Verify finish with Architect.
BD2	Single head LED area light mounted on 30ft square straight steel pole, with: •Finish: Verify with Architect IP Rating: IP65 Optics: IES type 2	Site	Visionaire VLX-1 / T2 / 192LC / 5 / 4K / voltage / AM / finish / options / SNT5-SS-guage-30-128C-136-S1-finish-	Integral LED CCT: 4000K CRI: 70 Lumens: 38901 (Delivered)	317W	Per EE (Integral)	LED	TBD	Verify voltage with EE. Verify finish with Architect.
BD3	Single head LED area light mounted on 30ft square straight pole, with: •Finish: Verify with Architect IP Rating: IP65 Optics: IES type 3	Site	Visionaire VLX-1 / T3 / 192LC / 5 / 4K / voltage / AM / finish / options / SNT5-SS-guage-30-128C-136-S1-finish-	Integral LED CCT: 4000K CRI: 70 Lumens: 39524 (Delivered)	317W	Per EE (Integral)	LED	TBD	Verify voltage with EE. Verify finish with Architect.
BD4	Single head LED area light mounted on 30ft straight steel pole, with: •Finish: Verify with Architect IP Rating: IP65 Optics: IES type 4	Site	Visionaire VLX-1 / T4 / 192LC / 5 / 4K / voltage / AM / finish / options / SNT5-SS-guage-30-128C-136-S1-finish-	Integral LED CCT: 4000K CRI: 70 Lumens: 37256 (Delivered)	317W	Per EE (Integral)	LED	TBD	Verify voltage with EE. Verify finish with Architect.
BD5	Single head LED area light mounted on 30ft pole, with: •Finish: Verify with Architect IP Rating: IP65 Optics: IES type 5W (wide)	Site	Visionaire VLX-1 / T5W / 192LC / 5 / 4K / voltage / AM / finish / options / SNT5-SS-guage-30-128C-136-S1-finish-	Integral LED CCT: 4000K CRI: 70 Lumens: 40512 (Delivered)	317W	Per EE (Integral)	LED	TBD	Verify voltage with EE. Verify finish with Architect.
BD5a	Twin head LED area light mounted on 30ft pole, with: •Finish: Verify with Architect IP Rating: IP65 Optics: IES type 5W (wide)	Site	Visionaire (2)VLX-1 / T5W / 192LC / 5 / 4K / voltage / AM / finish / options / SNT5-SS-guage-30-128C-136-D2-finish-	Integral LED CCT: 4000K CRI: 70 Lumens: 81024 (Delivered)	634W	Per EE (Integral)	LED	TBD	Verify voltage with EE. Verify finish with Architect.
DW1	Wall mounted LED up/down sconce with: •Finish: Bronze (Verify with Architect) IP Rating: IP66	Retail Building	Alva Lighting BRIAN-46-3000-MT2-OBT	Integral LED CCT: 3000K CRI: 90 Lumens: 4000 (Delivered)	20W	120-277V (Integral)	LED	0-10V (10%)	
FD1	Beam mounted LED cylinder downlight, with: •Optic: 33° •Aperture: 4.718" Round •Finish: Bronze (verify with Architect) •Mounting: suface -	Retail Building	WAC Lighting DS-W505-F930S- BZ	Integral LED CCT: 3000K CRI: 90 Lumens: 1745 (Delivered)	27W	120-277V Universal (Integral)	LED	0-10V	
GD1	**NOT USED.**								
GD2	Hardscape-mounted in-grade LED wallwash uplight, with anti-slip lens, and: •Optic: Wallwash •Aperture: 8" Round •Trim Finish: Stainless Steel •Installation Depth: 10" •Accessories: -IP67 rated	Retail Building	Targetti KPLM-41-WW-L1-30 / 1DU2525A / 1DU2521 / IDU2530	Integral LED CCT: 3000K CRI: Ra84 CBCP: N/A Lumens: 953 lm (Delivered)	14W	120-277V (Integral)	LED	NON	
GL1	**NOT USED.**								
GL2	Landscape-mounted partially buried LED tree uplight, with: •Optic: 18 degree •Aperture: 11" Round •Trim Finish: Stainless Steel •Installation Depth: •Accessories: -IP67 rated	Site - trees	Targetti KPLM-41-HE-FL-L1-30 / 1DU2325A / 1DU434336	Integral LED CCT: 3000K CRI: Ra84 CBCP: 4346 Lumens: 961 lm (Delivered)	16W	120-277V (Integral)	LED	NON	Verify with Lighting Designer and Landscae Architect the dimension from top of fixture to ground prior to installation.
RD1	Recessed adjustable LED accent, with: •Optic: 38° •Aperture: 4" Round •Trim: 8" Round •Trim Finish: •Housing Depth: -Max Ceiling Thickness: •Accessories: Solite lens -	Retail Building	Graffitti Lighting NIC-XT17-F-3000K-FL-C1-RD-FT-(trim finish)-01A	Integral LED CCT: 3000K CRI: 90 CBCP: Lumens: 1163 (Delivered)	17W	120-277V (Integral)	LED	0-10V (1%)	
SS1	Surface-mounted linear LED strip/light, with: •Optic: 120° •Mounting: mtg. channel •Field Cuttable: Yes -Max Run Length: •Rating: Suitable for wet location •Accessories: -	Retail Building	Ledi Lighting NF1-SO4O45-30-FAS - / NF1-CON-SO4O45-2C-FAS-1SR / NF1-CHN-AL5-1M / driver	Integral LED CCT: 3000K CRI: 90 Lumens: 192ft (Delivered)	3w/ft	24V (Remote)	LED	ELV	
SS2	Surface-mounted linear LED strip/light, concealed within architectural niche, with: •Optic: 120° •Mounting: mtg. channel •Field Cuttable: Yes -Max Run Length: •Rating: Suitable for wet location •Accessories: -	Gas Station Canopies	Ledi Lighting OP1-06-30-30-[LENGTH]-[channel]-mounting clips]-[louver]- [driver]	Integral LED CCT: 3000K CRI: 90 Lumens: 433ft (Delivered)	5.8w/ft	24V (Remote)	LED	ELV	
WD1	Wall mounted LED up/down sconce with: •Finish: Bronze (Verify with Architect) IP Rating: IP65	Retail Building	WAC Lighting WS-W2610 - BZ	Integral LED CCT: 3000K CRI: 90 Lumens: (Delivered)	30W	120-277V (Integral)	LED	0-10V (10%)	
End of Fixture Schedule									

ktgy

17911 Von Karman Ave.
Suite 200
Irvine, CA 92614
ktgy.com
949.851.2133

ktgy Project Number

Contact	DORINA WATSON
Email	dwatson@ktgy.com
Senior Director	DAVID SCHMITZ
Designer	RUSSEL ROSALES

Lighting Consultant

LIGHTING DESIGN ALLIANCE

A Sales O'Brien, Company

2830 TEMPLE AVE. LONG BEACH, CA 90806-2213, USA
T: 562.989.3843 - W: LightingDesignAlliance.com

SOBOBA SOVOVATUM VILLAGE PHASE-2

-

SAN JACINTO, CA

No.	DATE	DESCRIPTION

Client is responsible for notifying architect in writing for any discovered errors or omissions in the plans and specifications during construction of the project. Failure for Client to notify Architect of any known errors or omissions in the plans or specifications, and proceeding with constructing the portion of work shown in the plans or specifications containing known errors or omissions shall be a waiver by Client for any liability of Architect for such known errors or omissions. Client releases Architect for any liability for such portions of work, and Architect shall not be liable for any delay damages, change orders, repair costs, removal or demolition costs, or replacement of any such portions of work.

2026-05-26, ISSUED FOR BID

Sheet_Name

LIGHTING FIXTURE SCHEDULE

LD 1.0

Printed - 1/7/2026 4:29:06 PM

COPYRIGHT 2024 KTGY GROUP INC. These plans and specifications are protected by United States copyright law and may not be used, reproduced, distributed, transmitted, displayed, or modified in any way without the prior written consent of KTGY Group, Inc. or the authorized copyright holder or licensee.

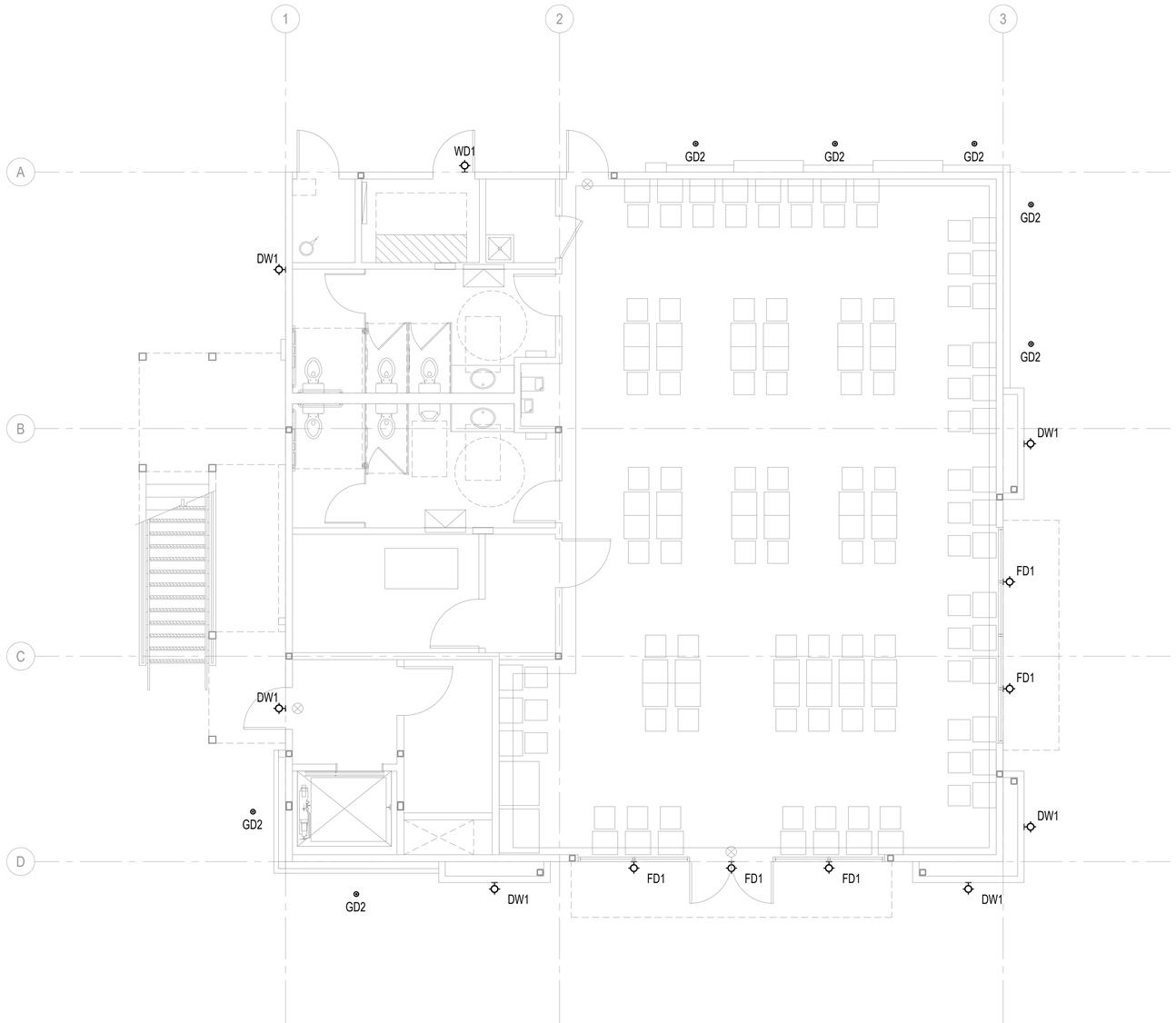

ktgy

17911 Von Karman Ave.
Suite 200
Irvine, CA 92614
ktgy.com
949.851.2133

ktgy Project Number

Contact	DORINA WATSON
Email	dwatson@ktgy.com
Senior Director	DAVID SCHMITZ
Designer	RUSSEL ROSALES

Lighting Consultant

LIGHTING DESIGN ALLIANCE

A Sales O'Brien, Company

2830 TEMPLE AVE. LONG BEACH, CA 90806-2213, USA
T: 562.989.3843 - W: LightingDesignAlliance.com

SOBOBA SOVOVATUM VILLAGE PHASE-2

-

SAN JACINTO, CA

No.	DATE	DESCRIPTION

Client is responsible for notifying architect in writing for any discovered errors or omissions in the plans and specifications during construction of the project. Failure for Client to notify Architect of any known errors or omissions in the plans or specifications, and proceeding with constructing the portion of work shown in the plans or specifications containing known errors or omissions shall be a waiver by Client for any liability of Architect for such known errors or omissions. Client releases Architect for any liability for such portions of work, and Architect shall not be liable for any delay damages, change orders, repair costs, removal or demolition costs, or replacement of any such portions of work.

2026-05-26, ISSUED FOR BID

Sheet_Name

2 STORY RETAIL - LIGHTING FLOOR PLAN - LEVEL 01

LD 1.1

Printed: 1/7/2026 4:29:06 PM

COPYRIGHT 2024 KTGY GROUP INC. These plans and specifications are protected by United States copyright law and may not be used, reproduced, distributed, transmitted, displayed, or modified in any way without the prior written consent of KTGY Group, Inc. or the authorized copyright holder or licensee.

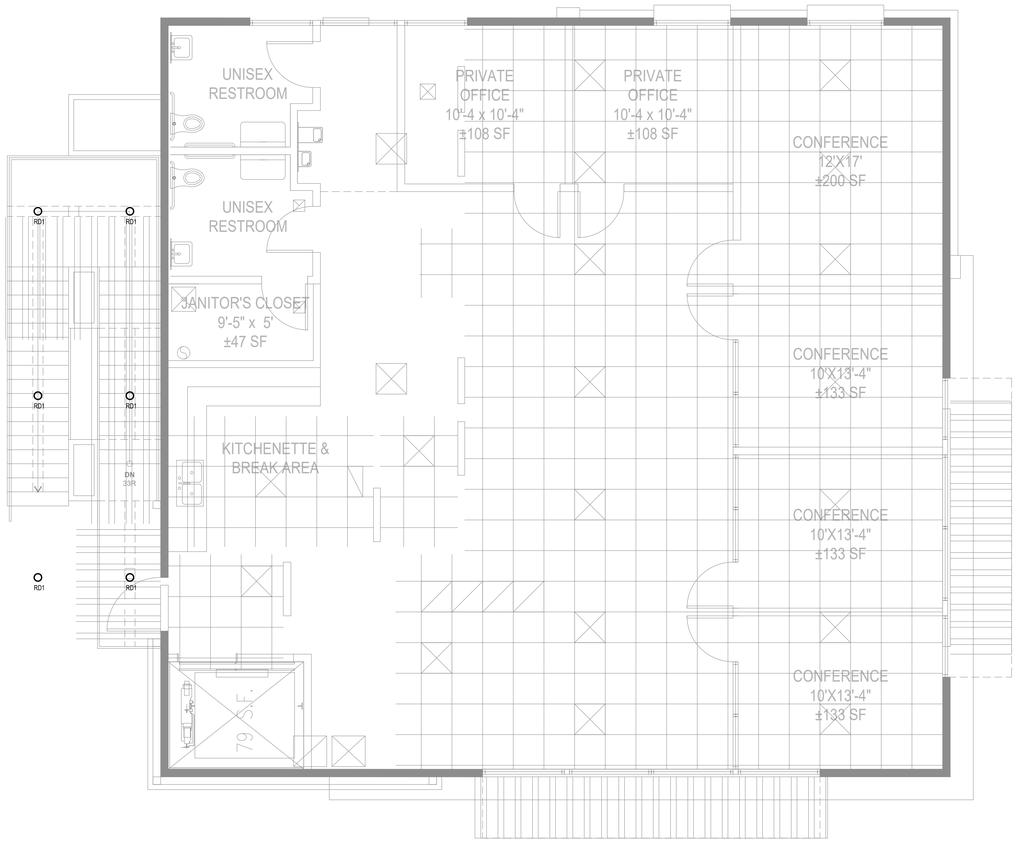

ktgy

17911 Von Karman Ave.
Suite 200
Irvine, CA 92614
ktgy.com
949.851.2133

ktgy Project Number

Contact	DORINA WATSON
Email	dwatson@ktgy.com
Senior Director	DAVID SCHMITZ
Designer	RUSSEL ROSALES

Lighting Consultant

LIGHTING DESIGN ALLIANCE

A Salas O'Brien Company

2830 TEMPLE AVE. LONG BEACH, CA 90806-2213, USA
T: 562.989.3843 - W : LightingDesignAlliance.com

SOBOBA SOVOVATUM VILLAGE PHASE-2

SAN JACINTO, CA

No.	DATE	DESCRIPTION

Client is responsible for notifying architect in writing for any discovered errors or omissions in the plans and specifications during construction of the project. Failure for Client to notify Architect of any known errors or omissions in the plans or specifications, and proceeding with constructing the portion of work shown in the plans or specifications containing known errors or omissions shall be a waiver by Client for any liability of Architect for such known errors or omissions. Client releases Architect for any liability for such portions of work, and Architect shall not be liable for any delay damages, change orders, repair costs, removal or demolition costs, or replacement of any such portions of work.

Sheet_Name

2 STORY RETAIL - LIGHTING FLOOR PLAN - LEVEL 02

2026-05-26, ISSUED FOR BID

LD 1.2

Printed: 1/7/2026 4:29:06 PM

COPYRIGHT 2024 KTGY GROUP INC. These plans and specifications are protected by United States copyright law and may not be used, reproduced, distributed, transmitted, displayed, or modified in any way without the prior written consent of KTGY Group, Inc. or the authorized copyright holder or licensee.

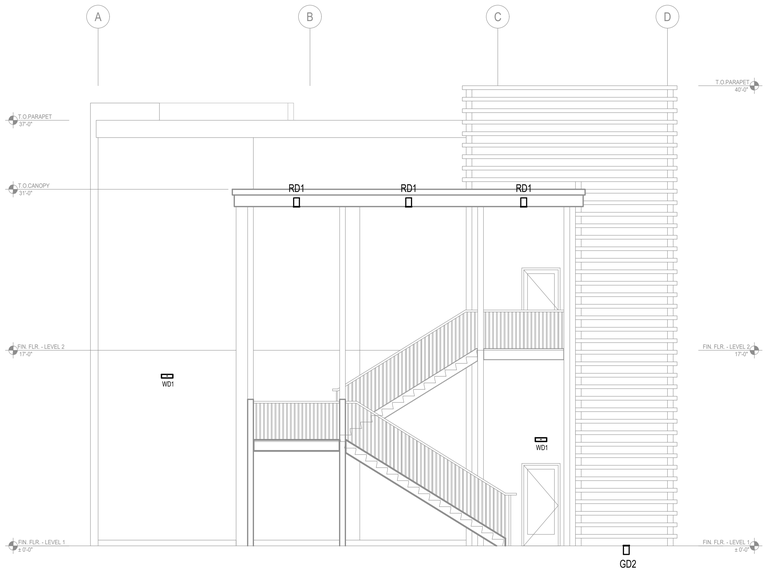

LEFT ELEVATION - WEST | SCALE: 3/16"=1'-0" | 4

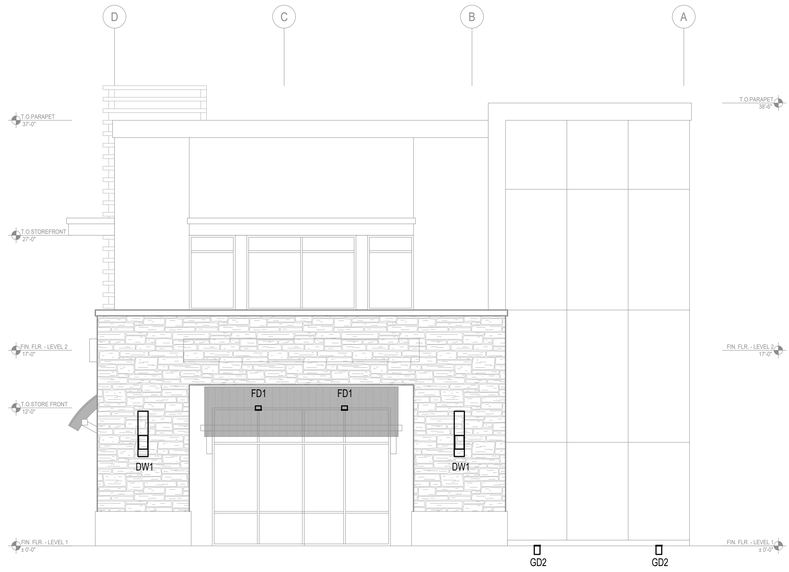

RIGHT ELEVATION - EAST | SCALE: 3/16"=1'-0" | 2

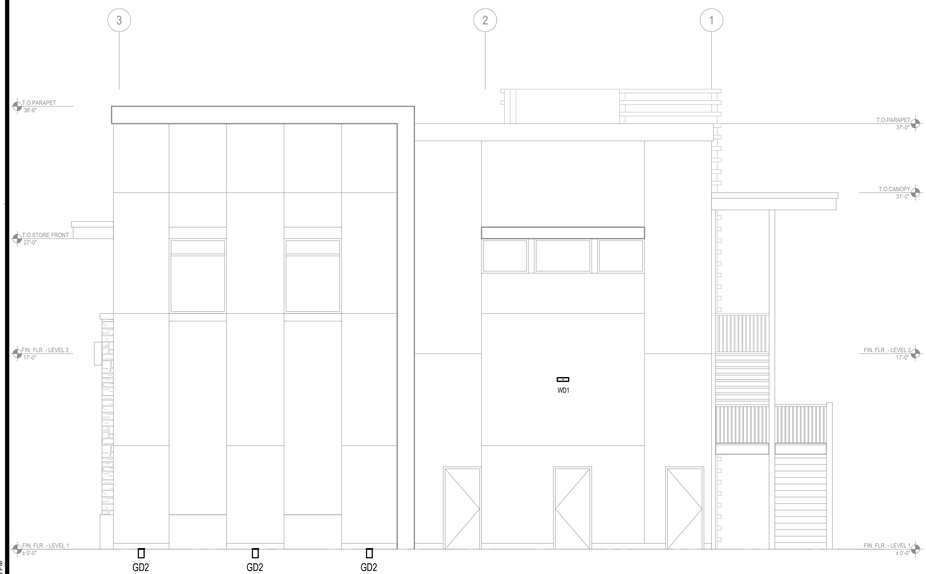

REAR ELEVATION - NORTH | SCALE: 3/16"=1'-0" | 3

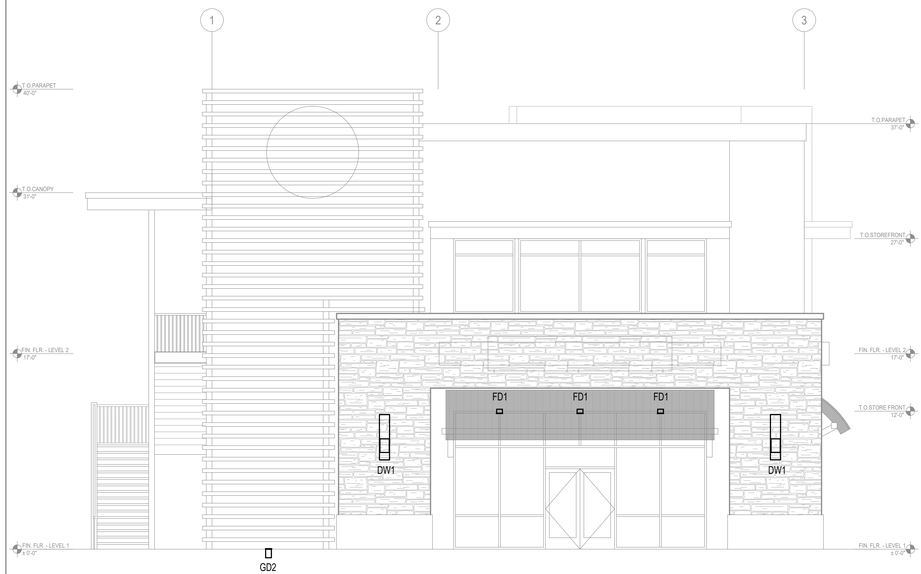

FRONT ELEVATION - SOUTH | SCALE: 3/16"=1'-0" | 1

Printed: 1/7/2026 4:29:06 PM

COPYRIGHT 2024 KTGY GROUP INC. These plans and specifications are protected by United States copyright law and may not be used, reproduced, distributed, transmitted, displayed, or modified in any way without the prior written consent of KTGY Group, Inc. or the authorized copyright holder or licensee.

ktgy

17911 Von Karman Ave.
Suite 200
Irvine, CA 92614
ktgy.com
949.851.2133

ktgy Project Number

Contact	DORINA WATSON
Email	dwatson@ktgy.com
Senior Director	DAVID SCHMITZ
Designer	RUSSEL ROSALES

Lighting Consultant

LIGHTING DESIGN ALLIANCE

A Sales O'Brien Company

2830 TEMPLE AVE. LONG BEACH, CA 90806-2213, USA
T: 562.989.3843 - W : LightingDesignAlliance.com

SOBOBA SOVOVATUM VILLAGE PHASE-2

SITE IMPROVEMENT

-

SAN JACINTO, CA

No.	DATE	DESCRIPTION
	5/22/2026	For Bid

Client is responsible for notifying architect in writing for any discovered errors or omissions in the plans and specifications during construction of the project. Failure for Client to notify Architect of any known errors or omissions in the plans or specifications, and proceeding with constructing the portion of work shown in the plans or specifications containing known errors or omissions shall be a waiver by Client for any liability of Architect for such known errors or omissions. Client releases Architect for any liability for such portions of work, and Architect shall not be liable for any delay damages, change orders, repair costs, removal or demolition costs, or replacement of any such portions of work.

Sheet_Name

2 STORY RETAIL - LIGHTING EXTERIOR ELEVATION

2026-05-26, ISSUED FOR BID

LD 1.5

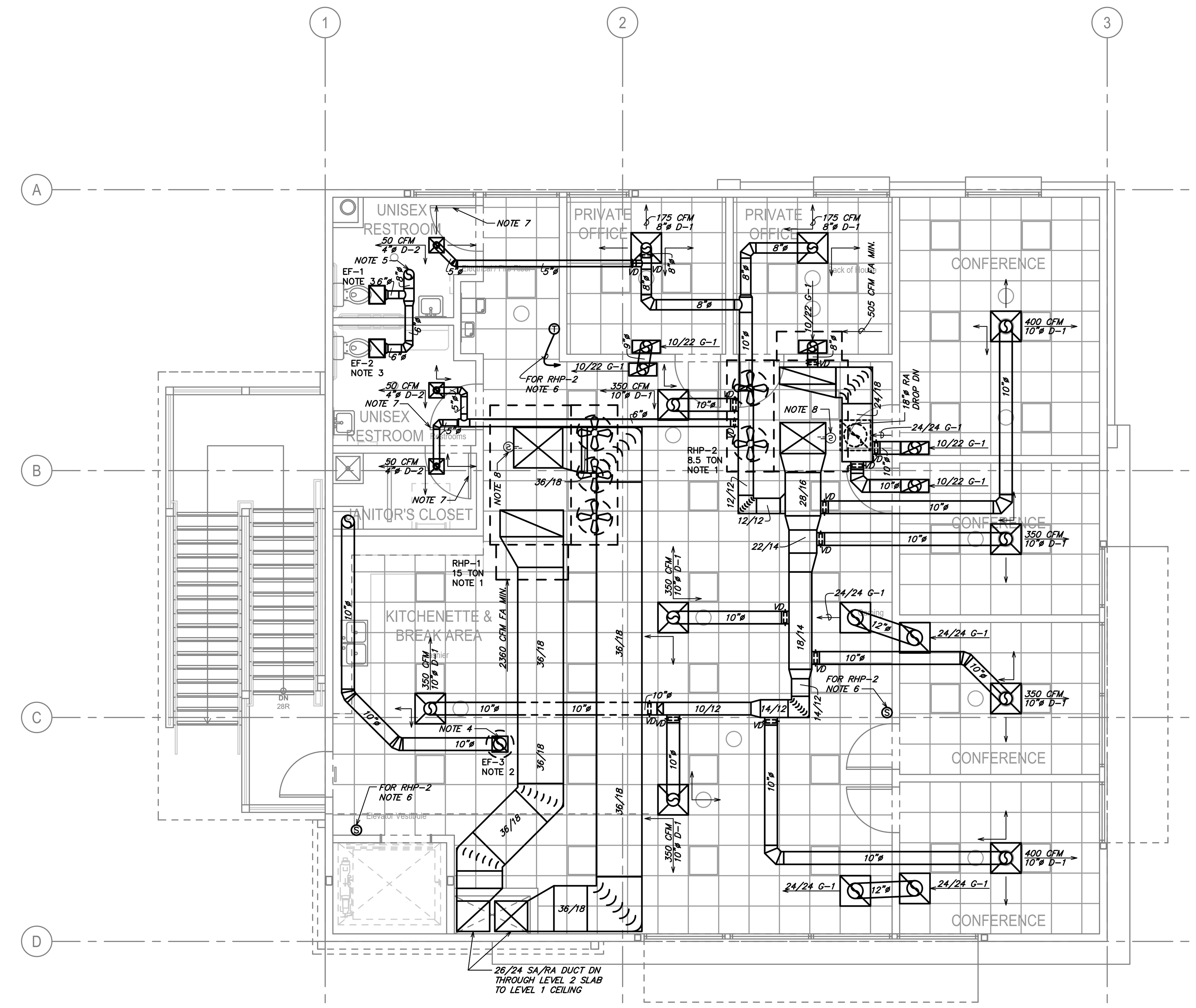

2 HVAC PLAN - SECOND FLOOR

3/16" = 1'-0"

NORTH

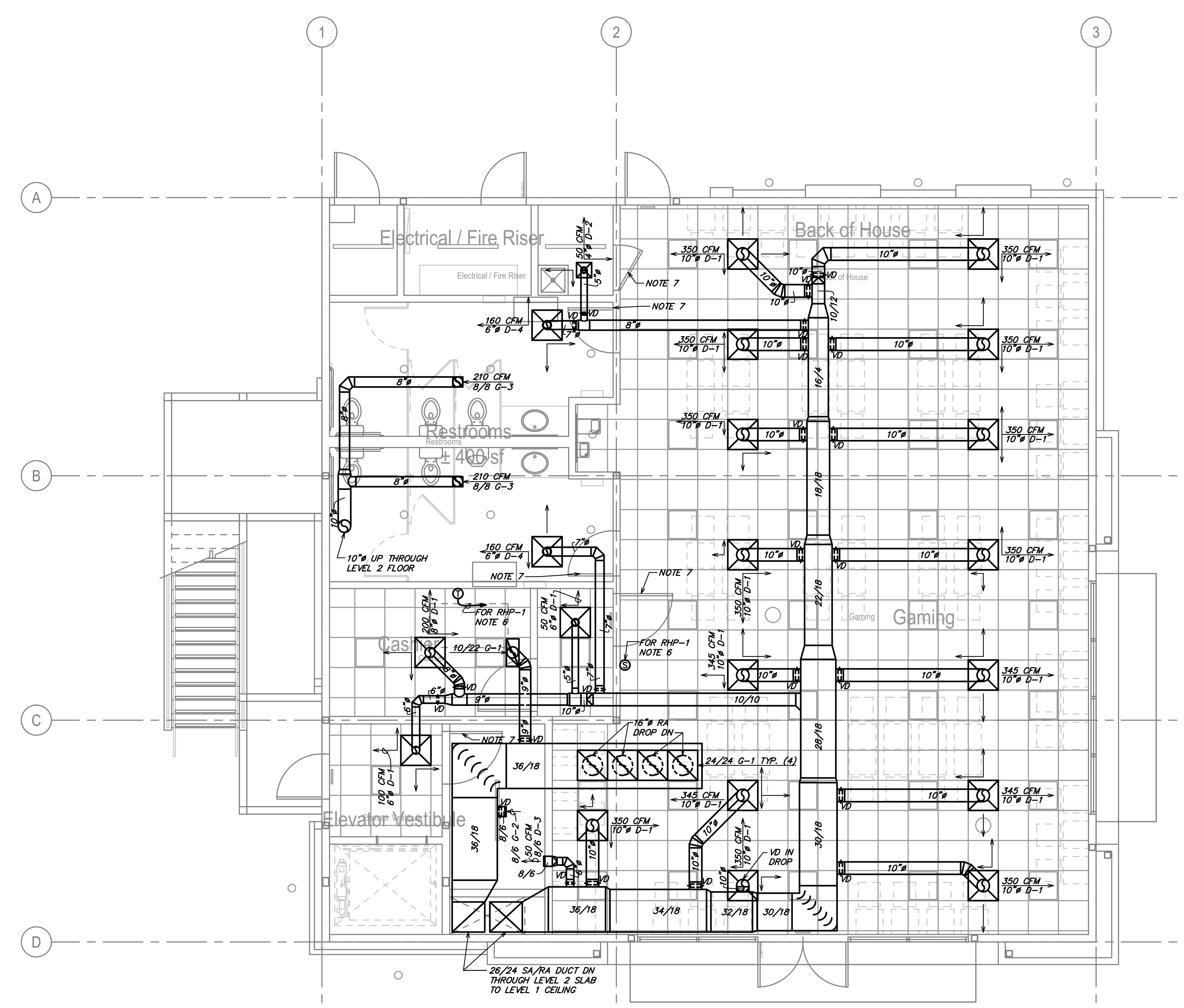

1 HVAC PLAN - FIRST FLOOR

NORTH

GENERAL NOTES:

- A. EXISTING CONDITIONS ARE BASED ON RECORD DRAWINGS PROVIDED BY THE OWNER AND/OR LIMITED FIELD VERIFICATION BY OTHERS. CONTRACTOR SHALL ADJUST TO ACTUAL FIELD CONDITIONS AT NO ADDITIONAL EXPENSE TO THE PROJECT.
- B. CONTRACTOR SHALL BE RESPONSIBLE FOR FIELD VERIFICATION OF ALL EXISTING CONDITIONS PRIOR TO SUBMITTING THE BID. NO ADDITIONAL COMPENSATION WILL BE PROVIDED FOR ANY EXTRAS DUE TO THE CONTRACTOR'S FAILURE TO VISIT THE PROJECT SITE PRIOR TO SUBMITTING THE BID. ANY DISCREPANCIES SHALL BE IMMEDIATELY REPORTED TO THE ENGINEER FOR RESOLUTION.
- C. CONTRACTORS SHALL FAMILIARIZE THEMSELVES WITH DEMOLITION WORK PRIOR TO BIDDING AND START OF WORK. CONTRACTOR IS RESPONSIBLE TO DEMOLISH ALL EXISTING AS REQUIRED FOR INSTALLATION/CONSTRUCTION OF NEW WORK.
- D. ALL WORK SHALL BE COMPLETED IN ACCORDANCE WITH ALL APPLICABLE GOVERNMENT AND LOCAL CODES.
- E. MECHANICAL CONTRACTOR SHALL FIELD COORDINATE WITH ELECTRICAL CONTRACTOR FOR ALL POWER REQUIREMENTS.
- F. ALL CONTRACTORS SHALL REVIEW A COMPLETE SET OF CONSTRUCTION DOCUMENTS AND COOPERATE WITH THE OTHER TRADES SO THAT THE INSTALLATION OF ALL EQUIPMENT MAY BE PROPERLY COORDINATED.
- G. ALL EQUIPMENT FURNISHED SHALL FIT THE SPACE AVAILABLE WITH CONNECTIONS IN THE REQUIRED LOCATIONS AND WITH ADEQUATE SPACE FOR OPERATING AND SERVICING. THE DRAWINGS ARE GENERALLY DIAGRAMMATIC AND INDICATE THE INTENT OF THE INSTALLATION WHILE THE SPECIFICATIONS AND EQUIPMENT LIST DENOTE THE TYPE AND QUALITY OF MATERIAL AND WORKMANSHIP TO BE USED. THE DRAWINGS SHALL NOT BE SCALED FOR EXACT MEASUREMENTS. WHERE A CONFLICT EXISTS BETWEEN THE DRAWINGS AND THE SPECIFICATIONS, THE HIGHER AND/OR MORE COSTLY STANDARD WILL APPLY. THE CONTRACTOR SHALL PROMPTLY NOTIFY THE ENGINEER WHOSE DECISION SHALL BE FINAL. NO ALLOWANCE WILL BE MADE SUBSEQUENTLY IN THIS REGARD ON BEHALF OF THE CONTRACTOR AFTER AWARD OF THE CONTRACT.
- H. COORDINATE DUCT ROUTING AND HEIGHTS WITH GENERAL CONTRACTOR. VERIFY ALL CLEARANCES BEFORE STARTING WORK.
- I. THE CONTRACTOR SHALL INSTALL ALL PIPING, DUCTWORK AND EQUIPMENT AS REQUIRED TO CONFORM TO THE STRUCTURE, AVOID OBSTRUCTIONS, PRESERVE CEILING HEIGHTS AND HEADROOM AND MAKE ALL EQUIPMENT REQUIRING MAINTENANCE OR REPAIR ACCESSIBLE.
- J. ALL DUCT CONNECTIONS TO HVAC EQUIPMENT MUST BE MADE WITH FLEXIBLE CONNECTORS.
- K. DO NOT ATTACH ANYTHING TO DECK ABOVE. ATTACH TO STRUCTURE (i.e. BEAMS, JOISTS) ONLY. DUCT HANGERS SHALL BE INSTALLED IN ACCORDANCE WITH LOCAL CODE. ALL CONNECTIONS TO JOISTS SHALL BE MADE AT THE TOP CORD.
- L. ALL DUCT DIMENSIONS INDICATED ARE CLEAR INSIDE DIMENSIONS. ALL SUPPLY AND UNTEMPERED OUTDOOR AIR DUCTWORK SHALL BE LINED WITH 1" ACOUSTICAL DUCT LINER OR WRAPPED WITH 1-1/2" THICK FIRE RETARDANT FIBERGLASS WITH A REINFORCED ALUMINUM FOIL JACKET AND SHALL BE APPROVED FOR USE BY SMACNA AND NAIMA. RETURN AIR TRANSFER DUCTS AND RETURN DUCTWORK WITHIN 10 FEET OF THE UNIT FAN SHALL BE LINED WITH 1" ACOUSTICAL DUCT LINER.
- M. ALL SUPPLY AND UNTEMPERED OUTDOOR AIR DUCTWORK VISIBLE TO THE PUBLIC SHALL BE INTERNALLY LINED AND PAINTED TO MATCH THE SURROUNDING AREA. DUCT WRAP INSULATION IS NOT PERMITTED IN THESE AREAS.
- N. EXPOSED SPIRAL DUCT TO BE GALVANIZED FINISH, FREE FROM SCRATCHES, DENTS OR BLEMISHES AND PAINTED TO MATCH THE SURROUNDING AREA. DUCT SHALL BE INTERNALLY LINED AND SEALED WITH DUCT SEALER COMPLETELY CONCEALED WITHIN THE DUCT JOINT. NO EXPOSED SEALER OR TAPE WILL BE ACCEPTED.
- O. ALL EXPOSED DUCTWORK SHALL BE INSTALLED TIGHT TO THE BOTTOM OF THE STRUCTURE.
- P. PROVIDE REMOTE VOLUME DAMPER CONTROL MANUFACTURED BY YOUNG REGULATOR OR UNITED ENERTECH FOR DAMPERS LOCATED ABOVE INACCESSIBLE CEILINGS. LOCATE CONTROLLER ABOVE ACCESSIBLE CEILING LOCATION.
- Q. TENANT'S CONTRACTOR SHALL BE RESPONSIBLE FOR THE FIELD VERIFICATION OF ALL UTILITY RUNS AND/OR OTHER IMPROVEMENTS LOCATED ON THE PREMISES PRIOR TO BIDDING. TENANT'S CONTRACTOR SHALL ALSO BE RESPONSIBLE FOR ALL COSTS RELATING TO THE RELOCATION OF, DAMAGE TO, REPAIR OF ANY EXISTING UTILITY RUNS AND/OR IMPROVEMENTS WHICH ARE DAMAGED AS A RESULT OF TENANT'S WORK IN OR AROUND THE PREMISES.
- R. ALL ROOFING WORK SHALL BE PERFORMED BY LANDLORD'S APPROVED ROOFING CONTRACTOR AT TENANT'S EXPENSE, IF REQUIRED IN LEASE OR TENANT CRITERIA MANUAL.
- S. ROOF MOUNTED EQUIPMENT SHALL BE LABELED WITH THE TENANT NAME AND SPACE NUMBER WITH 3" HIGH WEATHER PROOF LETTERS.
- T. MECHANICAL CONTRACTOR SHALL PROVIDE TENANT WITH A WRITTEN ONE (1) YEAR MANUFACTURER'S WARRANTY ON ALL HVAC EQUIPMENT PROVIDED AND / OR INSTALLED. THE WARRANTY SHALL INCLUDE ALL LABOR, MATERIALS AND THREE (3) ROUTINE SERVICES INCLUDING FILTER CHANGES DURING A ONE (1) YEAR PERIOD.
- U. AT THE COMPLETION OF CONSTRUCTION AN NEBB, AABC OR TABB CERTIFIED AIR BALANCE REPORT SHALL BE SUBMITTED TO THE ENGINEER AND LANDLORD. THE BALANCING MUST BE COMPLETED BY AN INDEPENDENT, THIRD PARTY CONTRACTOR WITH NO TIES TO THE INSTALLING CONTRACTORS.
- V. THE CONTRACTOR SHALL OBTAIN A COPY OF THE LANDLORD'S TENANT CRITERIA MANUAL. TENANT CRITERIA MANUAL IS AN INTEGRAL PART OF THIS CONTRACT. CONTRACTOR SHALL BE RESPONSIBLE FOR COMPLYING WITH LANDLORD REQUIREMENTS AT NO ADDITIONAL COST TO THE TENANT.
- W. PARTS OF THE BASE BUILDING SYSTEMS THAT FALL INTO LEASE LINE SHALL REMAIN UNDISTURBED UNLESS NOTED OTHERWISE.
- X. PROVIDE ALL NECESSARY WIRING, RELAYS, DETECTORS, COMPONENTS, ETC., FOR FIRE ALARM OR CONTROL SYSTEM INTERLOCK IF APPLICABLE. VERIFY WITH MALL PERSONNEL BEFORE BID.

HVAC NOTES:

1. PROVIDE NEW ROOF TOP UNIT AND FLAT CURB AS NOTED ON PLANS AND SCHEDULED ON SHEET M2. COORDINATE UNIT WITH STRUCTURAL AND ADJUST DUCTWORK ACCORDINGLY.
2. PROVIDE NEW EXHAUST FAN AS NOTED ON PLANS AND SCHEDULED ON SHEET M2. THE CONTRACTOR SHALL FIELD VERIFY THAT THE LOCATION SHOWN IS A MINIMUM OF 10'-0" FROM ANY OUTDOOR AIR INTAKE.
3. PROVIDE NEW EXHAUST FAN AS NOTED ON PLANS AND SCHEDULED ON SHEET M2.
4. PROVIDE 10"ø EXHAUST AIR DUCT UP TO EF-3 ON ROOF.
5. PROVIDE 8"ø EXHAUST AIR DUCT UP TO GREENHECK ROOF CAP MODEL RCC7. CONTRACTOR SHALL FIELD VERIFY THAT THE LOCATION SHOWN IS A MINIMUM OF 10'-0" FROM ANY OUTDOOR AIR INTAKE. COORDINATE ROOF CAP PAINT COLOR WITH ARCHITECT AND OWNER.
6. PROVIDE NEW FULLY DIGITAL 7 DAY PROGRAMMABLE TYPE THERMOSTAT WITH REMOTE SENSING CAPABILITIES, AUTO CHANGE OVER AND AUTO SET BACK. MOUNT THERMOSTAT AT 48" ABOVE FINISHED FLOOR. PROVIDE WITH CLEAR ACRYLIC LOCKING COVER. THERMOSTATS SERVING THE SAME TEMPERATURE ZONE SHALL BE INTERLOCKED TO PREVENT SIMULTANEOUS HEATING AND COOLING. COORDINATE LOCATION WITH WALL GRAPHICS LAYOUT. PROVIDE REMOTE TEMPERATURE SENSORS AS INDICATED ON PLAN. THERMOSTAT SHALL BE CAPABLE OF PREVENTING THE SUPPLEMENTARY ELECTRIC HEAT FROM OPERATING WHEN THE HEATPUMP CAN MEET THE HEATING LOAD.
7. CONTRACTOR SHALL UNDERCUT DOOR 3/4".
8. DUCT SMOKE DETECTOR ON SUPPLY SIDE DUCT AND SHUTDOWN RELAY SHALL BE FURNISHED BY THE ELECTRICAL CONTRACTOR FOR INSTALLATION BY THE MECHANICAL CONTRACTOR. ALL WIRING SHALL BE BY THE ELECTRICAL CONTRACTOR.

GENERAL 2025 CALIFORNIA GREEN BUILDING STANDARDS CODE NOTES:

- A. TESTING AND ADJUSTING OF SYSTEMS SHALL BE REQUIRED PER SECTION 5.410.4 FOR NEW BUILDINGS WITH FLOOR AREA LESS THAN 10,000 SQUARE FEET OR NEW SYSTEMS TO SERVE AN ADDITION OR ALTERATION SUBJECT TO SECTION 303.1.
- B. DEVELOP A WRITTEN PLAN OF PROCEDURES FOR TESTING AND ADJUSTING SYSTEMS. SYSTEMS TO BE INCLUDED FOR TESTING AND ADJUSTING SHALL INCLUDE, AS APPLICABLE TO THE PROJECT, THE SYSTEMS LISTED IN SECTION 5.410.4.2.
- C. PERFORM TESTING AND ADJUSTING PROCEDURES IN ACCORDANCE WITH MANUFACTURER'S SPECIFICATIONS AND APPLICABLE STANDARDS ON EACH SYSTEM.
- D. BEFORE A NEW SPACE-CONDITIONING SYSTEM SERVING A BUILDING OR SPACE IS OPERATED FOR NORMAL USE, BALANCE THE SYSTEM IN ACCORDANCE WITH THE PROCEDURES DEFINED BY NATIONAL STANDARDS LISTED IN SECTION 5.410.4.3.1.
- E. AFTER COMPLETION OF TESTING, ADJUSTING, AND BALANCING, PROVIDE A FINAL REPORT OF TESTING SIGNED BY THE INDIVIDUAL RESPONSIBLE FOR PERFORMING THESE SERVICES.
- F. PROVIDE THE BUILDING OWNER OR REPRESENTATIVE WITH DETAILED OPERATING AND MAINTENANCE INSTRUCTIONS AND COPIES OF GUARANTIES/WARRANTIES FOR EACH SYSTEM PRIOR TO FINAL INSPECTION. O&M INSRUCTIONS SHALL BE CONSISTENT WITH OSHA REQUIREMENTS IN CCR, TITLE 8, SECTION 5142 AND OTHER RELATED REGULATIONS.
- G. INCLUDE A COPY OF ALL INSPECTION VERIFICATIONS AND REPORTS REQUIRED BY THE ENFORCING AGENCY.
- H. THE PERMANENT HVAC SYSTEM SHALL ONLY BE USED DURING CONSTRUCTION IF NECESSARY TO CONDITION THE BUILDING OR AREAS OF ADDITION OR ALTERATION WITHIN THE REQUIRED TEMPERATURE RANGE FOR MATERIAL AND EQUIPMENT INSTALLATION. IF THE HVAC SYSTEM IS USED DURING CONSTRUCTION, USE RETURN AIR FILTERS WITH A MINIMUM EFFICIENCY REPORTING VALUE (MERV) OF 13, BASED ON ASHRAE 52.2. REPLACE ALL FILTERS IMMEDIATELY PRIOR TO OCCUPANCY, OR, IF THE BUILDING IS OCCUPIED DURING ALTERATION, AT THE CONCLUSION OF CONSTRUCTION.
- I. AT THE TIME OF ROUGH INSTALLATION AND DURING STORAGE ON THE CONSTRUCTION SITE AND UNTIL FINAL STARTUP OF THE HEATING, COOLING, AND VENTILATING EQUIPMENT, ALL DUCT AND OTHER RELATED AIR DISTRIBUTION COMPONENT OPENINGS SHALL BE COVERED WITH TAPE, PLASTIC, SHEETMETAL OR OTHER METHODS ACCEPTABLE TO THE ENFORCING AGENCY TO REDUCE THE AMOUNT OF DUST, WATER OR DEBRIS WHICH MAY ENTER THE SYSTEM.
- J. IN MECHANICALLY VENTILATED BUILDINGS, PROVIDE REGULARLY OCCUPIED AREAS OF THE BUILDING WITH AIR FILTRATION MEDIA FOR OUTSIDE AND RETURN AIR THAT PROVIDES AT LEAST A MINIMUM EFFICIENCY REPORTING VALUE (MERV) OF 13. MERV 13 FILTERS SHALL BE INSTALLED PRIOR TO OCCUPANCY, AND RECOMMENDATIONS FOR MAINTENANCE WITH FILTERS OF THE SAME VALUE SHALL BE INCLUDED IN THE OPERATION AND MAINTENANCE MANUAL.
- K. INSTALLATIONS OF HVAC, REFRIGERATION AND FIRE SUPPRESSION EQUIPMENT SHALL COMPLY WITH SECTIONS 5.508.1.1 AND 5.508.1.2.
- L. INSTALL HVAC AND REFRIGERATION AND FIRE SUPPRESSION EQUIPMENT THAT DO NOT CONTAIN CFCS.
- M. INSTALL HVAC AND REFRIGERATION AND FIRE SUPPRESSION EQUIPMENT THAT DO NOT CONTAIN HALONS.
- N. ADHESIVES, SEALANTS, AND CAULKS USED ON THE PROJECT SHALL MEET THE REQUIREMENTS OF SECTIONS 5.504.4.1 THROUGH 5.504.4.6.

Schnackel engineers
New York ■ Miami ■ Omaha ■ Los Angeles ■ Seattle ■ Honolulu
800-581-0963 www.schnackel.com

ktgy

17911 Von Karman Ave.
Suite 200
Irvine, CA 92614
ktgy.com
949.851.2133

ktgy Project Number

Contact	DORINA WATSON
Email	dwatson@ktgy.com
Senior Director	DAVID SCHMITZ
Designer	RUSSEL ROSALES

Developer
SEDC
23906 SOBOBA ROAD
SAN JACINTO, CA 92581

PHONE: (951) 663-2058

SOBOBA SOVOVATUM VILLAGE PHASE-2

-

SAN JACINTO, CA

No.	DATE	DESCRIPTION

Client is responsible for notifying architect in writing for any discovered errors or omissions in the plans and specifications during construction of the project. Failure for Client to notify Architect of any known errors or omissions in the plans or specifications, and proceeding with constructing the portion of work shown in the plans or specifications containing known errors or omissions shall be a waiver by Client for any liability of Architect for such known errors or omissions. Client releases Architect for any liability for such portions of work, and Architect shall not be liable for any delay damages, change orders, repair costs, removal or demolition costs, or replacement of any such portions of work.

2026-05-26, ISSUED FOR BID

Sheet Name
HVAC PLAN

M1-11

SE JOB#: 250720

COPYRIGHT 2024 KTGY GROUP INC. These plans and specifications are protected by United States copyright law and may not be used, reproduced, distributed, transmitted, displayed, or modified in any way without the prior written consent of KTGY Group, Inc. or the authorized copyright holder or licensee.

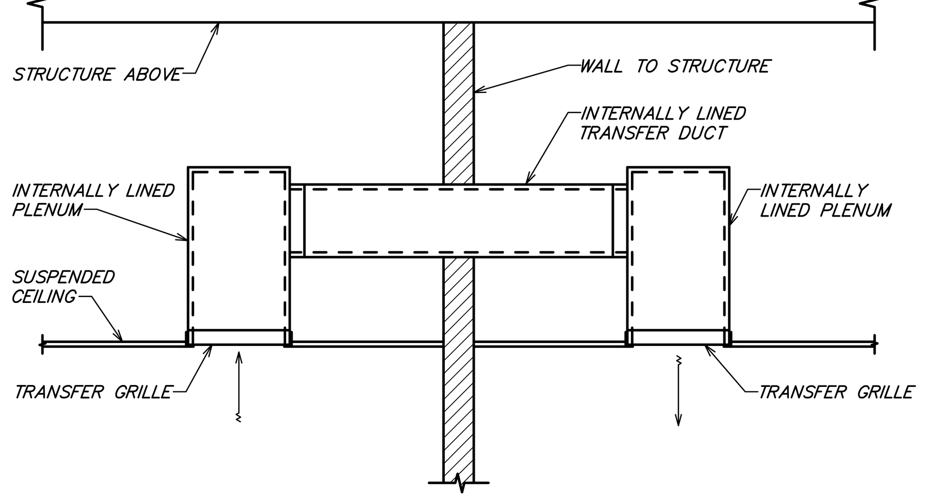

7 RETURN AIR TRANSFER
NOT TO SCALE

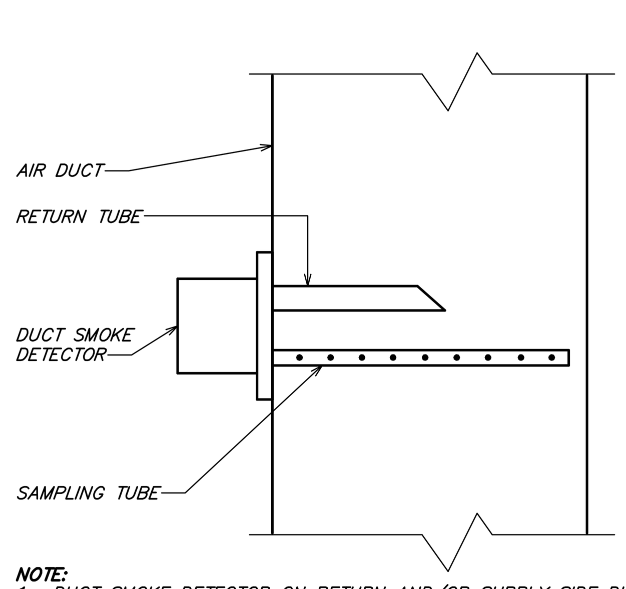

NOTE:
1. DUCT SMOKE DETECTOR ON RETURN AND/OR SUPPLY SIDE DUCT AND SHUTDOWN RELAY SHALL BE FURNISHED BY THE ELECTRICAL CONTRACTOR FOR INSTALLATION BY THE MECHANICAL CONTRACTOR. ALL WIRING SHALL BE BY THE ELECTRICAL CONTRACTOR.

6 DUCT SMOKE DETECTOR DETAIL
NOT TO SCALE

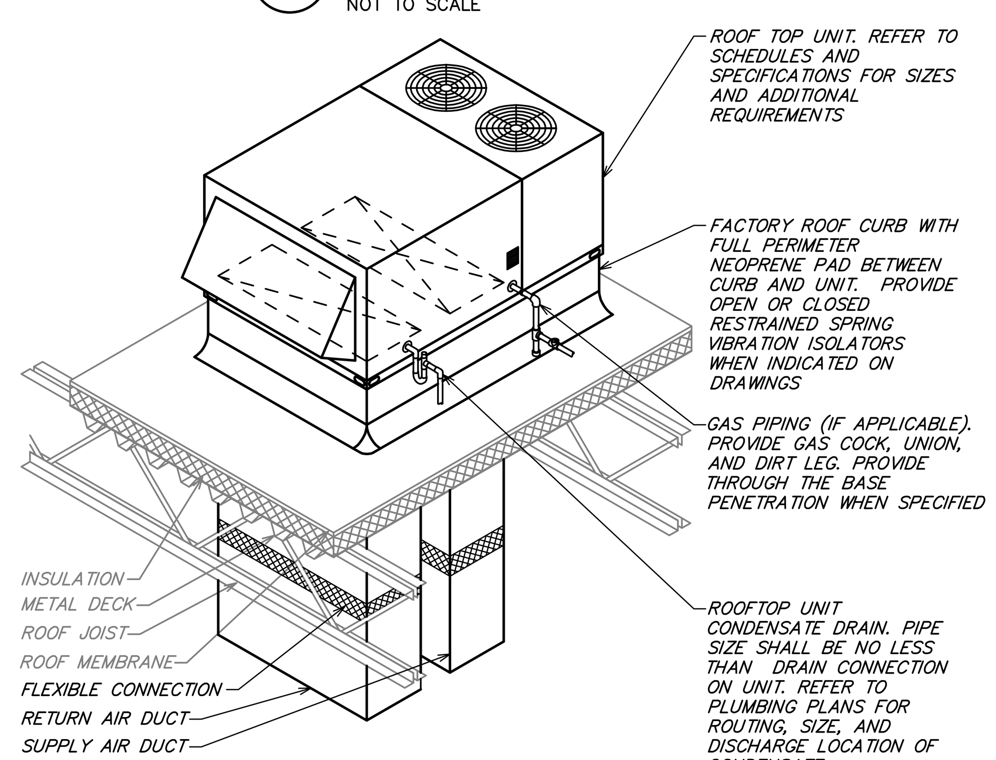

NOTES:
1. PROVIDE THROUGH CURB ELECTRICAL CONNECTIONS. NO ROOF PENETRATIONS OF ELECTRICAL CONDUITS WILL BE ACCEPTABLE.
2. DUCT SMOKE DETECTOR SHALL BE MOUNTED AND INSTALLED PER LOCAL CODES.

5 TYPICAL ROOF TOP UNIT DETAIL
NOT TO SCALE

SYMBOLS

HEATING–VENTILATING–AIR CONDITIONING

SYMBOL	DESCRIPTION	SYMBOL	DESCRIPTION	SYMBOL	DESCRIPTION
	STEAM (LOW PRESSURE) STEAM (MEDIUM PRESSURE) STEAM (HIGH PRESSURE)		AUTOMATIC CONTROL VALVE		SUPPLY OR FRESH AIR DUCT (SA OR FA)
	CONDENSATE (LOW PRESSURE) CONDENSATE (MEDIUM PRESSURE) CONDENSATE (HIGH PRESSURE)		PRESSURE REGULATING VALVE (PRV)		RETURN OR EXHAUST DUCT (RA OR EA)
HWS	HOT WATER SUPPLY (HEATING)	OR ®	SAFETY RELIEF VALVE	ST	SOUND TRAP
HWR	HOT WATER RETURN (HEATING)		BLOW OFF VALVE	CFM SIZE	SUPPLY REGISTER OR GRILLE (R OR G)
EG	ETHYLENE GLYCOL SUPPLY	#/HR	F AND T TRAP (CAP. #/HR)	CFM SIZE	RETURN REGISTER OR GRILLE (R OR G)
EG	ETHYLENE GLYCOL RETURN		THERMOSTATIC TRAP	CFM SIZE	FRESH AIR INTAKE (FA)
CWS	CHILLED WATER SUPPLY	S.P.	STATIC PRESSURE		ROUND CEILING DIFFUSER (SUPPLY)
CWR	CHILLED WATER RETURN		CIRCUIT SETTER FLOW CONTROL VALVE		ROUND CEILING DIFFUSER (SUPPLY AND RETURN)
D	CONDENSATE OR VACUUM PUMP DISCHARGE		AIR BLEEDER VALVE (RADIANT PANEL)		SQUARE CEILING DIFFUSER (SUPPLY)
H	HUMIDIFICATION LINE		AIR ELIMINATOR		SQUARE CEILING DIFFUSER (SUPPLY AND RETURN)
FOS	FUEL OIL SUPPLY		AUTOMATIC BALANCING VALVE		SQUARE CEILING DIFFUSER THREE WAY THROW
FOR	FUEL OIL RETURN		SOLENOID VALVE (REFRIGERANT)		SQUARE CEILING DIFFUSER TWO WAY THROW
FOV	FUEL OIL VENT		THERMOSTATIC EXPANSION VALVE (REFR.)		GRAVITY DAMPER
G	GAS LINE		BACK PRESSURE VALVE	MD	MOTORIZED DAMPER
RL	REFRIGERANT LIQUID LINE		SIGHT GLASS	FD	FIRE DAMPER
RS	REFRIGERANT SUCTION LINE		ROUND DUCT RISER	SD	SMOKE DAMPER
RD	REFRIGERANT HOT GAS DISCHARGE LINE	FC-1	FAN COIL UNIT AND MARK	FD,SD	FIRE AND SMOKE DAMPER
C	CONDENSER WATER	UH-1	UNIT HEATER–PROPELLER TYPE & MARK	BD	BASEBOARD DIFFUSER
CR	CONDENSER WATER RETURN	CUH-1	CABINET UNIT HEATER & MARK	1	HEATING RISER NUMBER
BBO	BOILER BLOW OFF	FT-1 MBH	FIN TUBE, MARK AND CAPACITY	1	EXHAUST FAN RISER NUMBER
ES	EXHAUST STEAM	C-1	CONVECTOR AND MARK	BR	BASEBOARD RADIATION
	CONCENTRIC REDUCER	UV-1	UNIT VENTILATOR AND MARK	S	REMOTE SENSOR
	ECCENTRIC REDUCER	9/6	RECTANGULAR DUCT FIRST FIGURE IS SIDE SHOWN	T	THERMOSTAT
	UNION	SIZE 16"ø	ROUND DUCT		
	STRAINER		CANVAS CONNECTION		
	EXPANSION JOINT	ELEV PLAN VD	VOLUME DAMPER (ELEV AND PLAN)		
	THERMOMETER		TURNING VANES		
	PRESSURE GAGE		EXTRACTOR		

SE JOB#: 250720

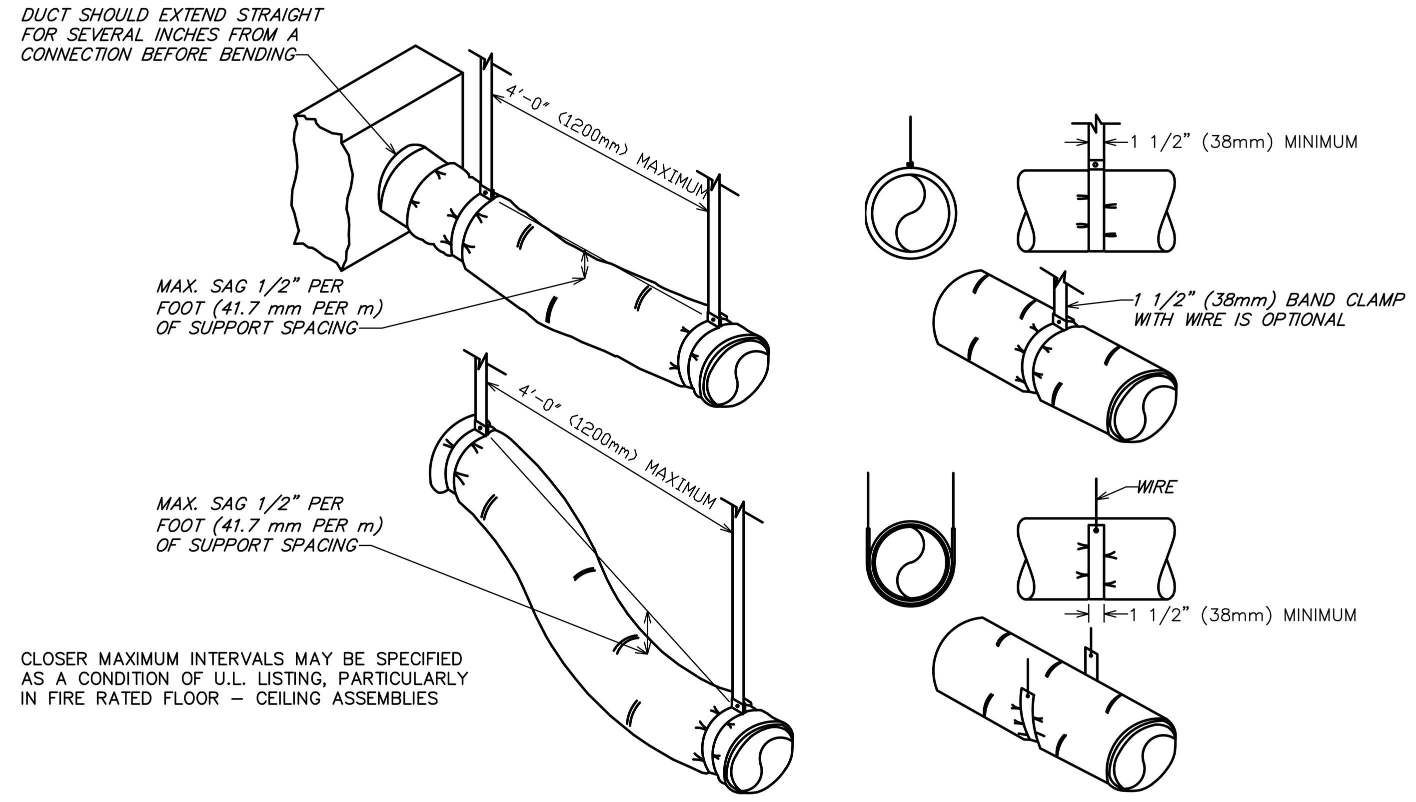

CLOSER MAXIMUM INTERVALS MAY BE SPECIFIED AS A CONDITION OF U.L. LISTING, PARTICULARLY IN FIRE RATED FLOOR – CEILING ASSEMBLIES

4 FLEXIBLE DUCT SUPPORTS
NOT TO SCALE

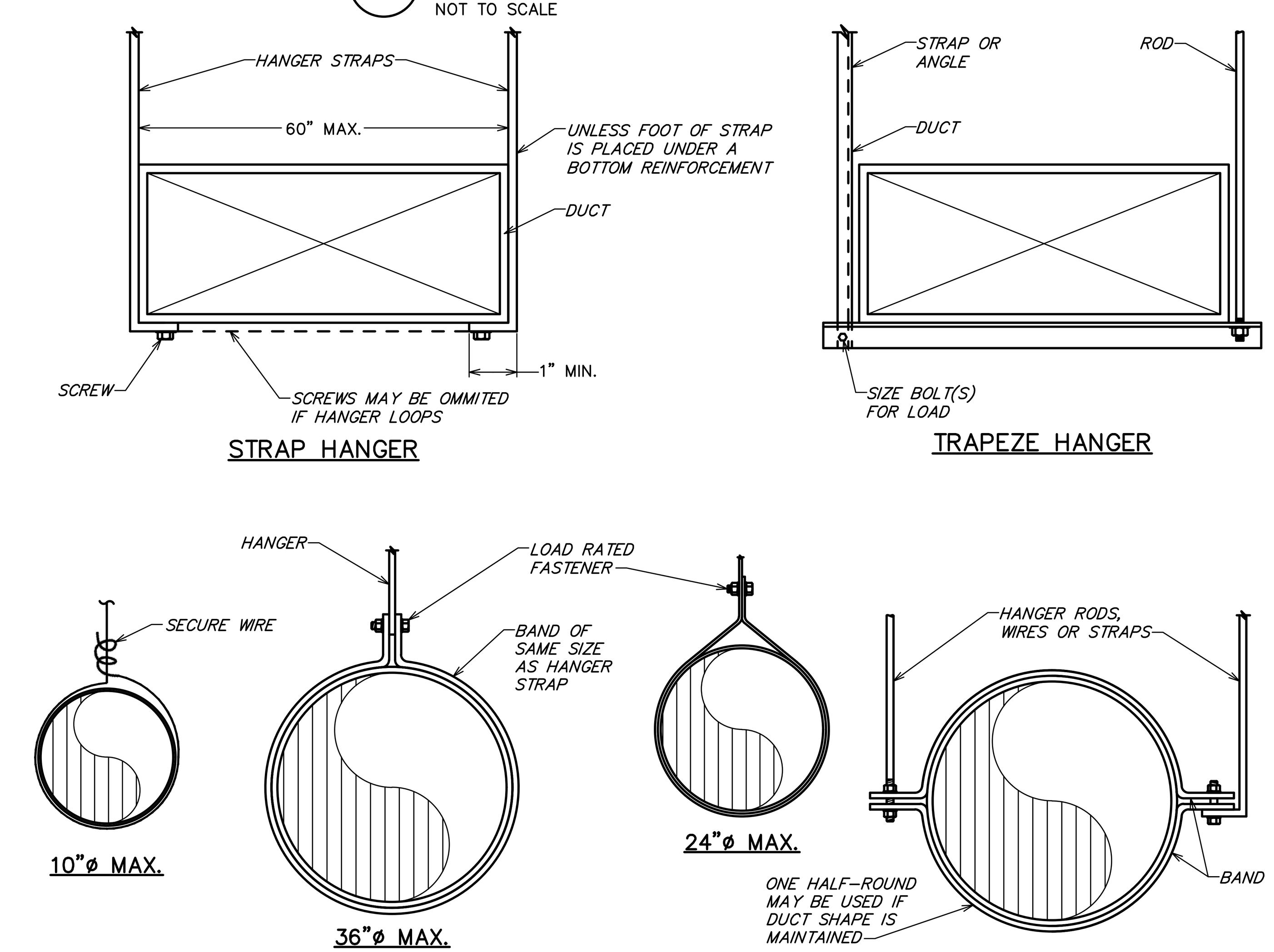

NOTE: HANGERS MUST NOT DEFORM DUCT SHAPE

3 DUCT HANGER DETAIL
NOT TO SCALE

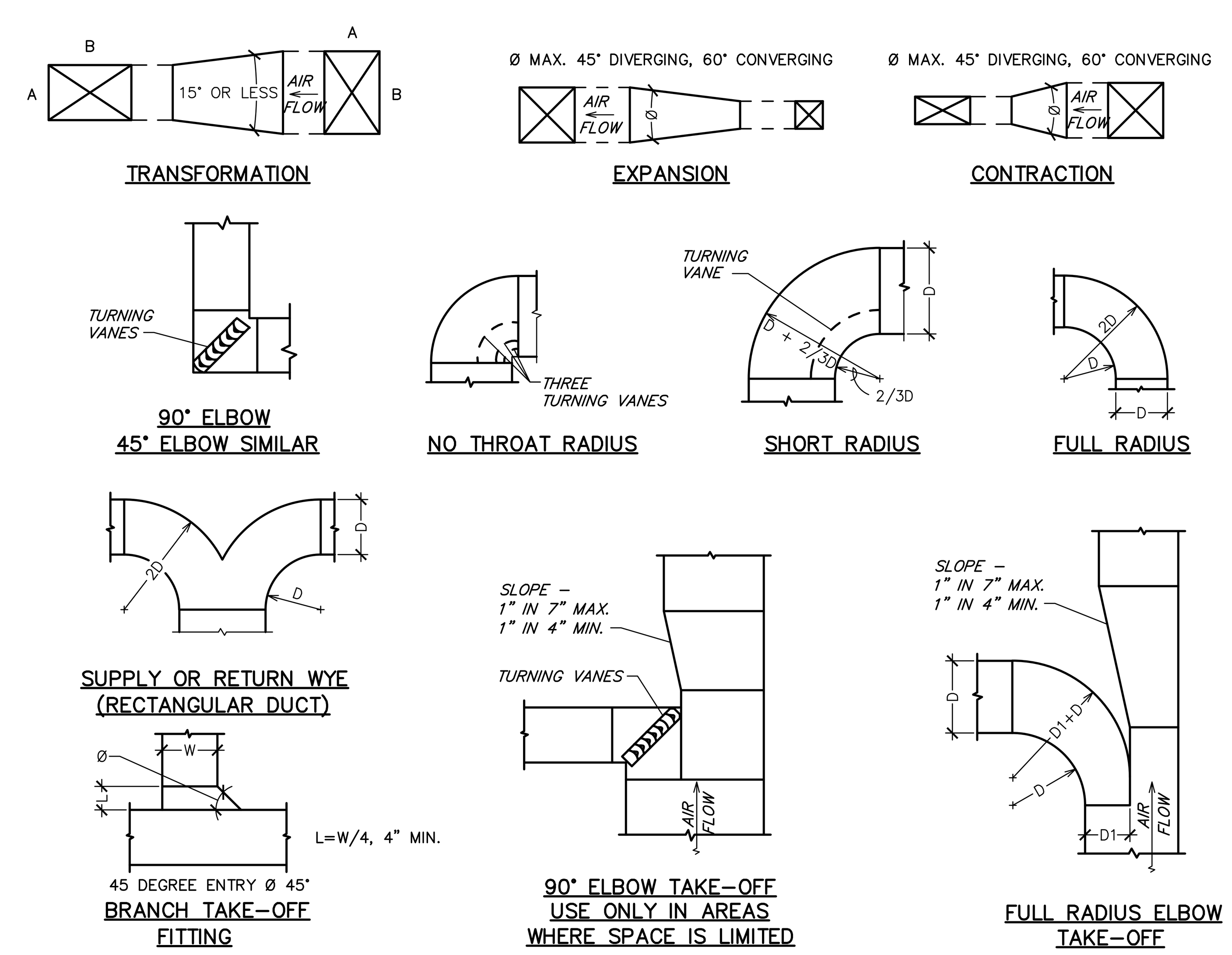

2 DUCTWORK DETAILS
NOT TO SCALE

ROOF TOP HEAT PUMP UNITS

MARK	COOLING SEN (MBH)	COOLING TOT (MBH)	COOLING COOL (TON)	HEATING AT 47F (MBH)	HEATING ELEC (KW)	SUPPLY AIR (CFM)	EXT. S.P. (IN)	FAN BHP	ELECTRICAL VOLT	ELECTRICAL PH	ELECTRICAL MCA	ELECTRICAL MOCP	WEIGHT (LBS)	SEER	EER	IEER	HSPF	COP	REFRIG TYPE	AAON MODEL	REMARKS
RHP-1	193.8	193.8	16	143.4	30.0	6,000	1.00	3.3	208	3	205.0	225	2,998	–	11.3	13.9	–	3.4	R-454B	RNA016CA8	(1–3,5–11,13–14)
RHP-2	90.3	95.2	9	71.4	15.0	3,400	1.00	1.8	208	3	102.0	110	1,758	–	12.7	16.6	–	3.5	R-454B	RNA009BA8	(1–4,6–10,12–14)

AAON IS THE BASIS OF DESIGN. HIGH EFFICIENCY CARRIER, LENNOX, TRANE OR YORK ARE EQUAL.
COOLING CAPACITIES ARE BASED ON EXPECTED SITE CONDITIONS: 85.5°F DB/ 64.3°F WB INDOOR ENTERING AIR TEMPERATURE, 101.5°F DB AIR ENTERING OUTDOOR FAN. SCHEDULED UNIT MAY DIFFER FROM AHRI STANDARD CFM.

REMARKS:
1. PROVIDE EQUIPMENT WITH SCCR GREATER THAN THE AVAILABLE FAULT CURRENT AT THE EQUIPMENT OR UPSTREAM PANELBOARD. REFER TO THE ELECTRICAL ONE LINE DIAGRAM AND PANEL SCHEDULES FOR AVAILABLE FAULT CURRENT AT UPSTREAM PANELBOARD.
2. PROVIDE WITH FACTORY INSTALLED DISCONNECT, UNPOWERED CONVENIENCE OUTLET, THROUGH THE BASE ELECTRICAL CONNECTION.
3. PROVIDE WITH 14 INCH HEIGHT ROOF CURB.
4. PROVIDE WITH DRY BULB ECONOMIZER AND BAROMETRIC RELIEF DAMPER.
5. PROVIDE WITH DRY BULB ECONOMIZER AND POWER EXHAUST.
6. ECONOMIZER SHALL INCLUDE FAULT DETECTION DIAGNOSTICS (FDD). DAMPER LEAKAGE SHALL MEET APPLICABLE ENERGY CODE.
7. PROVIDE WITH CONDENSER COIL HAIL GUARD.
8. DUCT SMOKE DETECTOR ON THE SUPPLY SIDE DUCT AND SHUTDOWN RELAY SHALL BE FURNISHED BY THE ELECTRICAL CONTRACTOR FOR INSTALLATION BY THE MECHANICAL CONTRACTOR. ALL WIRING SHALL BE BY THE ELECTRICAL CONTRACTOR.
9. PROVIDE WATER LEVEL MONITORING DEVICE IN DRAIN PAN TO SHUT OFF UNIT IF THE DRAIN LINE BECOMES RESTRICTED.
10. UNITS WITH COOLING CAPACITY GREATER THAN OR EQUAL TO 65 MBH SHALL HAVE MULTI-STAGE CAPABILITY
11. PROVIDE WITH INTEGRAL SUPPLEMENTAL HEATER, 30 KW, 208 VOLT, 3 PHASE ELECTRIC HEATER.
12. PROVIDE WITH INTEGRAL SUPPLEMENTAL HEATER, 15 KW, 208 VOLT, 3 PHASE ELECTRIC HEATER.
13. PROVIDE CONTROLS TO PREVENT THE SUPPLEMENTARY ELECTRIC HEAT FROM OPERATING WHEN THE HEAT PUMP CAN MEET THE HEATING LOAD.
14. ECONOMIZER SHALL MEET ALL TITLE 24 REQUIREMENTS.

EXHAUST FANS

MARK	LOCATION	SERVICE	AIRFLOW (CFM)	EXTERNAL STATIC (IN H2O)	SONES	MOTOR DATA FAN (HP)	MOTOR DATA VOLT	MOTOR DATA PH	RPM	FEI	MANUFACTURER	MODEL NUMBER	REMARKS
EF-1	CEILING	RESTROOM	420	0.60	8.0	0.1	115	1	1,725	NA	GREENHECK	SP-A200	(1,4–6)
EF-2	CEILING	RESTROOM	100	0.63	4.0	–	115	1	900	NA	GREENHECK	SP-A200	(1,4–6)
EF-3	ROOF	RESTROOM	100	0.63	4.0	–	115	1	900	NA	GREENHECK	G-090-VG	(2–3)

REMARKS:
1. FAN MUST BE UL/CUL 507 LISTED.
2. FAN MUST BE UL/CUL 705 LISTED.
3. PROVIDE MINIMUM 14 INCH HEIGHT ROOF CURB.
4. PROVIDE WITH BACKDRAFT DAMPER.
5. FAN MUST HAVE A ROUND DUCT CONNECTION
6. PROVIDE FAN WITH ROOF CAP MODEL RCC-7 AND 14" HEIGHT ROOF CURB.

DIFFUSERS, GRILLES AND REGISTERS

MARK	SERVICE	LOCATION	CEILING TYPE	MOUNTING TYPE	MANUFACTURER	MODEL NUMBER	REMARKS
D-1	SUPPLY	CEILING	AC TILE	LAY-IN	TITUS	OMNI X 3 24x24 26 D-75	(1–2)
D-2	SUPPLY	CEILING	GYP. BOARD	LAY-IN	TITUS	OMNI X 3 12x12 26 D-75	(1–2,4)
D-3	SUPPLY	DUCT	NA	SURFACE	TITUS	300RL X 1 26 X	(1–2)
D-4	SUPPLY	CEILING	GYP. BOARD	LAY-IN	TITUS	OMNI X 3 24x24 26 D-75	(1–2,4)
G-1	RETURN/TRANS	CEILING	AC TILE	LAY-IN	TITUS	50F X 3 26 X X	(1–3)
G-2	TRANSFER	DUCT	NA	SURFACE	TITUS	350RL X 1 26 X	(1–2)
G-3	EXHAUST	CEILING	AC TILE	LAY-IN	TITUS	50F X 3 26 X X	(1–3)

REMARKS:
1. TITUS IS THE BASE OF DESIGN. KRUEGER, PRICE, NAILOR, CARNES ARE EQUAL. NO EXCEPTIONS.
2. SEE PLAN FOR NECK SIZE.
3. PROVIDE 1/2" X 1/2" X 1" CORE.
4. PROVIDE WITH MODEL TRM FRAME.

MAXIMUM HALF OF DUCT PERIMETER	PAIR AT 10 FT. SPACING STRAP	PAIR AT 10 FT. SPACING WIRE/ROD	PAIR AT 8 FT. SPACING STRAP	PAIR AT 8 FT. SPACING WIRE/ROD	PAIR AT 5 FT. SPACING STRAP	PAIR AT 5 FT. SPACING WIRE/ROD	PAIR AT 4 FT. SPACING STRAP	PAIR AT 4 FT. SPACING WIRE/ROD
$\frac{P}{2}$ = 30"	1" x 22 GA.	10 GA. (.135")	1" x 22 GA.	10 GA. (.135")	1" x 22 GA.	12 GA. (.106")	1" x 22 GA.	12 GA. (.106")
$\frac{P}{2}$ = 72"	1" x 18 GA.	3/8"	1" x 20 GA.	1/4"	1" x 22 GA.	1/4"	1" x 22 GA.	1/4"
$\frac{P}{2}$ = 96"	1" x 16 GA.	3/8"	1" x 18 GA.	3/8"	1" x 20 GA.	3/8"	1" x 22 GA.	1/4"
$\frac{P}{2}$ = 120"	1 1/2" x 16 GA.	1/2"	1" x 16 GA.	3/8"	1" x 18 GA.	3/8"	1" x 20 GA.	1/4"
$\frac{P}{2}$ = 168"	1 1/2" x 16 GA.	1/2"	1 1/2" x 16 GA.	1/2"	1" x 16 GA.	3/8"	1" x 18 GA.	3/8"
$\frac{P}{2}$ = 192"	---	1/2"	1 1/2" x 16 GA.	1/2"	1" x 16 GA.	3/8"	1" x 16 GA.	3/8"
$\frac{P}{2}$ = 193" UP	SPECIAL ANALYSIS REQUIRED							

WHEN STRAPS ARE LAP JOINED USE THESE MINIMUM FASTENERS:	SINGLE HANGER MAXIMUM ALLOWABLE LOAD STRAP	SINGLE HANGER MAXIMUM ALLOWABLE LOAD WIRE OR ROD (DIA.)
1" x 18, 20, 22 GA. – TWO #10 OR ONE 1/4" BOLT 1" x 16 GA. – TWO 1/4" DIA. 1" x 16 GA. – TWO 3/8" DIA. PLACE FASTENERS IN SERIES, NOT SIDE BY SIDE.	1" x 22 GA. – 260 LBS. 1" x 20 GA. – 320 LBS. 1" x 18 GA. – 420 LBS. 1" x 16 GA. – 700 LBS. 1 1/2" x 16 GA. – 1100 LBS.	0.106" – 80 LBS. 0.135" – 120 LBS. 0.162" – 160 LBS. 1/4" – 270 LBS. 3/8" – 680 LBS. 1/2" – 1250 LBS. 5/8" – 2000 LBS. 3/4" – 3000 LBS.

NOTES:
1. DIMENSIONS OTHER THAN GAUGE ARE IN INCHES.
2. TABLES ALLOW FOR DUCT WEIGHT, 1 LB./SF INSULATION WEIGHT AND NORMAL REINFORCEMENT AND TRAPEZE WEIGHT, BUT NO EXTERNAL LOADS.
3. STRAPS ARE GALVANIZED STEEL; OTHER MATERIALS ARE UNCOATED STEEL.
4. ALLOWABLE LOADS FOR P/2 ASSUME THAT DUCTS ARE 16 GA. MAXIMUM, EXCEPT THAT WHEN MAXIMUM DUCT DIMENSION (W) IS OVER 60" THEN P/2 MAXIMUM IS 1.25 W.
5. 12, 10 OR 8 GA. WIRE IS STEEL OF BLACK ANNEALED, BRIGHT BASIC OR GALVANIZED TYPE.
6. DUCTS SHALL BE SUPPORTED AT INTERVALS NOT EXCEEDING 10 FEET.

1 RECTANGULAR DUCT HANGER TABLE
NOT TO SCALE

Schnackel engineers
New York ■ Miami ■ Omaha ■ Los Angeles ■ Seattle ■ Honolulu
800-581-0963 www.schnackel.com

ktgy
17911 Von Karman Ave.
Suite 200
Irvine, CA 92614
ktgy.com
949.851.2133

ktgy Project Number

Contact	DORINA WATSON
Email	dwatson@ktgy.com
Senior Director	DAVID SCHMITZ
Designer	RUSSEL ROSALES

Developer
SEDC
23906 SOBOBA ROAD
SAN JACINTO, CA 92581

PHONE: (951) 663-2058

SOBOBA SOVOVATUM VILLAGE PHASE-2

-
SAN JACINTO, CA

No.	DATE	DESCRIPTION

Client is responsible for notifying architect in writing for any discovered errors or omissions in the plans and specifications during construction of the project. Failure for Client to notify Architect of any known errors or omissions in the plans or specifications, and proceeding with constructing the portion of work shown in the plans or specifications containing known errors or omissions shall be a waiver by Client for any liability of Architect for such known errors or omissions. Client releases Architect for any liability for such portions of work, and Architect shall not be liable for any delay damages, change orders, repair costs, removal or demolition costs, or replacement of any such portions of work.

2026-05-26, ISSUED FOR BID

Sheet Name
MECHANICAL DETAILS AND SCHEDULES

M2-11

COPYRIGHT 2024 KTGY GROUP INC. These plans and specifications are protected by United States copyright law and may not be used, reproduced, distributed, transmitted, displayed, or modified in any way without the prior written consent of KTGY Group, Inc. or the authorized copyright holder or licensee.

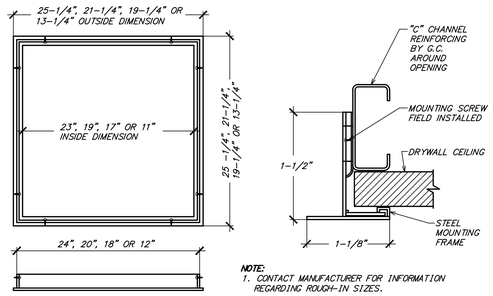

NOTE:
1. CONTACT MANUFACTURER FOR INFORMATION REGARDING ROUGH-IN SIZES.

7 TYPICAL DRYWALL MOUNTING FRAME DETAIL

NOT TO SCALE

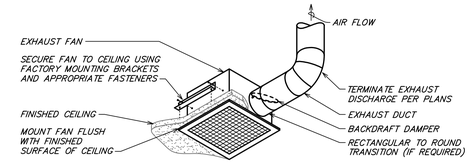

4 CEILING FAN DETAIL

NOT TO SCALE

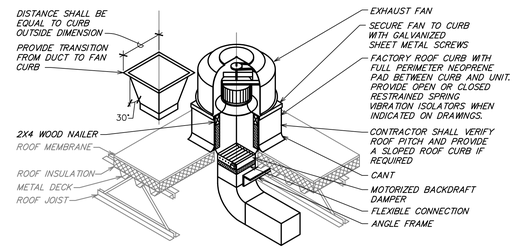

3 ROOF EXHAUST FAN DETAIL

NOT TO SCALE

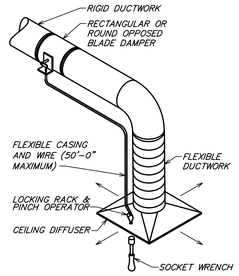

10 REMOTE VOLUME DAMPER CONTROLLER

NOT TO SCALE

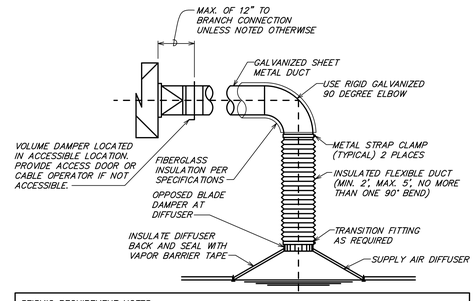

SEISMIC REQUIREMENT NOTES:

A. AIR TERMINALS WEIGHING LESS THAN 20 POUNDS SHALL BE POSITIVELY ATTACHED TO THE MAIN RUNNER.

B. AIR TERMINALS WEIGHING BETWEEN 20 POUNDS AND 56 POUNDS SHALL HAVE TWO 12 GAUGE HANGER WIRES CONNECTED FROM THE TERMINAL TO THE STRUCTURE ABOVE AND SHALL BE POSITIVELY ATTACHED TO THE MAIN RUNNER. THE HANGER WIRES MAY BE SLACK.

C. AIR TERMINALS WEIGHING MORE THAN 56 POUNDS SHALL HAVE INDEPENDENT SUPPORT FROM THE STRUCTURE ABOVE.

D. HANGER WIRES SHALL MEET THE SAME INSTALLATION REQUIREMENTS AS VERTICAL SUSPENSION WIRES.

6 TYPICAL DIFFUSER CONNECTION – SEISMIC

NOT TO SCALE

SEISMIC BRACING AND SIZING

BRACE SIZING		BRACING SPACING		
BRACE SIZE	MAXIMUM LENGTH	PIPE SIZE	MAXIMUM HANGER SPACING	MAXIMUM BRACE SPACING* (SEE NOTE B)
2" x 2" x 3/16" ANGLE	6'–0"	UP TO 1 1/2"	7'–0"	NOT REQUIRED
2 1/8" x 2 1/8" x 3/16" ANGLE	8'–0"	2"	10'–0"	NOT REQUIRED
3" x 3" x 3/16" ANGLE	10'–0"	2 1/2" TO 3"	10'–0"	7'–0"
3 1/2" x 3 1/2" x 1/4" ANGLE	11'–6"	4" AND UP	10'–0"	10'–0"
4" x 4" x 1/4" ANGLE	13'–0"			
3" DIAM. PIPE	13'–0" TO 18'–0"			

NOTES:
A. DUCTS WHICH ARE LARGER THAN OR EQUAL TO 6 SQUARE FEET IN CROSS SECTION AREA SHALL BE BE BRACED LATERALLY 7'–0" ON CENTERS WITH 2" x 2" x 3/16" ANGLE.
*B. BRACING CAN BE OMITTED ON ALL PIPING SUSPENDED BY INDIVIDUAL HANGERS 12" OR LESS IN LENGTH FROM THE TOP OF PIPE TO THE BOTTOM OF THE SUPPORT FOR THE HANGER.

2 SEISMIC BRACE SCHEDULE

NOT TO SCALE

DIA.	WIRE DIA.	ROD	STRAP
10" DN	ONE 12 GA.	1/4"	1" x 22 GA.
11–18"	TWO 12 GA. OR ONE 8 GA.	1/4"	1" x 22 GA.
19–24"	TWO 10 GA.	1/4"	1" x 22 GA.
25–36"	TWO 8 GA.	3/8"	1" x 20 GA.
37–50"	–	TWO 3/8"	TWO 1" x 20 GA.
51–60"	–	TWO 3/8"	TWO 1" x 18 GA.
61–84"	–	TWO 3/8"	TWO 1" x 16 GA.
85–96"	–	TWO 1/2"	TWO 1 1/2" x 16 GA.

NOTES:
1. STRAPS ARE GALVANIZED STEEL; RODS ARE UNCOATED OR GALVANIZED STEEL; WIRE IS BLACK ANNEALED, BRIGHT BASIC OR GALVANIZED STEEL. ALL ARE ALTERNATIVES.
2. TABLE ALLOWS FOR CONVENTIONAL WALL THICKNESS, AND JOINT SYSTEMS PLUS ONE LB/SF OF INSULATION WEIGHT. IF HEAVIER DUCTS ARE TO BE INSTALLED, ADJUST HANGER SIZES TO BE WITHIN THEIR LOAD LIMITS.

9 ROUND DUCT HANGER TABLE

NOT TO SCALE

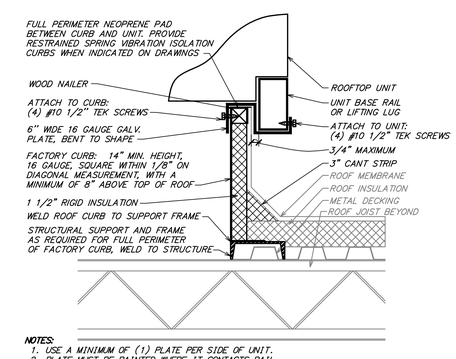

NOTES:
1. USE A MINIMUM OF (1) PLATE PER SIDE OF UNIT.
2. PLATE MUST BE PAINTED WHERE IT CONTACTS RAIL.
3. USE (8) SCREWS TO SECURE PLATE, NO SMALLER THAN #10x1/2''
4. CONTRACTOR IS RESPONSIBLE FOR VERIFICATION OF, AND COMPLIANCE WITH ALL LOCAL CODES.
5. CUT AND PATCH EXISTING ROOFING AS REQUIRED FOR NEW CURB INSTALLATION.
6. CURB SHALL BE SHIMMED LEVEL. PROVIDE TAPERED ROOF CURB IF REQUIRED.

5 SEISMIC ROOF CURB DETAIL

NOT TO SCALE

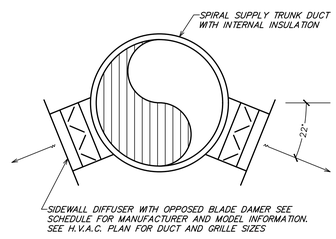

8 DUCT MOUNTED DIFFUSER DETAIL

NOT TO SCALE

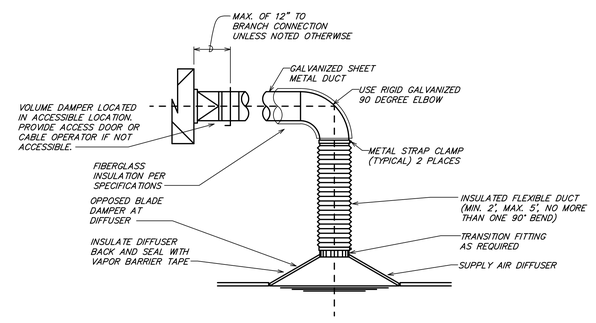

SEISMIC REQUIREMENTS:
– ATTACH ALL CEILING AIR TERMINALS SHALL BE SUPPORTED DIRECTLY BY THE CEILING MAIN RUNNERS OR BY SUPPLEMENTAL FRAMING WHICH IS SUPPORTED BY MAIN RUNNERS AND POSITIVELY ATTACHED WITH SCREWS OR OTHER APPROVED CONNECTORS.
– SURFACE MOUNTED FIXTURES SHALL BE ATTACHED TO A MAIN RUNNER WITH A POSITIVE CLAMPING DEVICE MADE OF MATERIAL WITH A MINIMUM OF 14 GAGE. ROTATIONAL SPRING CLAMPS DO NOT COMPLY.

1 TYPICAL DIFFUSER–DRYWALL CEILING–SEISMIC

NOT TO SCALE

ktgy

17911 Von Karman Ave.
Suite 200
Irvine, CA 92614
ktgy.com
949.851.2133

ktgy Project Number

Contact	DORINA WATSON
Email	dwatson@ktgy.com
Senior Director	DAVID SCHMITZ
Designer	RUSSEL ROSALES

Developer
SEDC
23906 SOBOBA ROAD
SAN JACINTO, CA 92581

PHONE: (951) 663-2058

SOBOBA SOVOVATUM VILLAGE PHASE-2

SAN JACINTO, CA

No.	DATE	DESCRIPTION

Client is responsible for notifying architect in writing for any discovered errors or omissions in the plans and specifications during construction of the project. Failure for Client to notify Architect of any known errors or omissions in the plans or specifications, and proceeding with constructing the portion of work shown in the plans or specifications containing known errors or omissions shall be a waiver by Client for any liability of Architect for such known errors or omissions. Client releases Architect for any liability for such portions of work, and Architect shall not be liable for any delay damages, change orders, repair costs, removal or demolition costs, or replacement of any such portions of work.

2026-05-26, ISSUED FOR BID

Sheet Name
MECHANICAL DETAILS

M2-12

Schnackel engineers
800-381-0963 www.schnackel.com

SE JOB#: 230720

COPYRIGHT 2024 KTGY GROUP INC. These plans and specifications are protected by United States copyright law and may not be used, reproduced, distributed, transmitted, displayed, or modified in any way without the prior written consent of KTGY Group, Inc. or the authorized copyright holder or licensee.

SECTION 230000 - HVAC GENERAL CONDITIONS

PART 1 GENERAL

1.01 APPLICABILITY
- A. This section supplements all sections of the Specifications for Division 23 and shall apply to all phases of work hereinafter specified, shown on the Drawings, or required to provide a complete installation of approved HVAC systems.

1.02 DEFINITIONS
- A. "Work" is hereby defined as, "The construction and services required by the Contract Documents whether completed or partially completed and includes all labor, materials, equipment, and services provided or to be provided by the Contractor to fulfill the Contractor's obligations. The work may constitute the whole or a part of the project."
- B. "Furnish" is hereby defined as, "To supply and deliver, unload, and inspect for damage."
- C. "Install" is hereby defined as, "To unpack, assemble, erect, apply, place, finish, cure, protect, clean, connect, and place into operation into the work."
- D. "Provide" is hereby defined as, "To furnish and install."
- E. "Connect" is hereby defined as, "To bring service to the equipment and make final attachment including necessary ductwork, piping, wiring, etc."
- F. "Concealed" is hereby defined as, "Hidden from sight in chases, furred spaces, shafts, hung ceilings, embedded in construction, in crawl spaces, or buried."
- G. "Exposed" is hereby defined as, "Not installed underground nor concealed as defined by the Specifications."
- H. "Drawings" is hereby defined as, "All plans, details, equipment schedules, diagrams, sketches, etc. issued for the construction of the work."

1.03 CODES AND STANDARDS
- A. Perform work in accordance with the applicable Building Code, Electrical Code, Fire Code, Mechanical Code, Plumbing Code, Energy Code, and all other applicable codes, amendments, and ordinances. Also perform all work in accordance with the Americans with Disabilities Act (ADA) and the Authority Having Jurisdiction (AHJ) including Fire Marshal(s).
- B. Perform work in accordance with Landlord requirements, including any Tenant Criteria Manuals and Lease Exhibits, where applicable.
- C. Perform work in accordance with the applicable utility companies serving the project. Make all arrangements with the utility companies for proper coordination of the work.
- D. Recognized Standards: Design, manufacture, testing and method of installation of all apparatus and materials furnished under the requirements of these Specifications shall conform to the latest publications or standard rules of Underwriters Laboratories, Inc. (U.L.), American Society for Testing and Materials (ASTM), American National Standards Institute (ANSI), and National Electrical Code (NEC), National Fire Protection Association (NFPA), American Society of Heating, Refrigerating and Air-Conditioning Engineers (ASHRAE), and the Sheet Metal and Air Conditioning Contractors' National Association (SMACNA).
- E. The Contract Documents shall take precedence where the Contract Documents exceed code, Landlord, utility, or recognized standards requirements.

1.04 PERMITS AND FEES
- A. Permits, licenses, fees, inspections and arrangements required for the work under this Contract shall be obtained by the Contractor at his expense, unless otherwise indicated.

1.05 CONTRACT DRAWINGS
- A. The Contractor is responsible to obtain, fully understand, and coordinate the work with the complete set of Contract Documents. Any required corrections, including all associated costs, arising from issues caused by the Contractor's failure to understand and/or coordinate the work with the complete set of Contract Documents are the Contractor's sole responsibility.
- B. Work under these sections is diagrammatic unless indicated otherwise and is intended to convey the scope of work and indicate the general arrangement of ductwork, piping, equipment, and accessories. Follow these drawings in laying out the work and verify spaces for the installation of these materials and equipment. Wherever a question exists as to the exact intended location of ductwork, piping, or equipment, obtain instructions from the Architect before proceeding with the work.
- C. Notify the Architect for resolution if a discrepancy is discovered within the Contract Documents. Failure of the Contractor to notify the Architect of discrepancies shall result in the resolution becoming the Contractor's responsibility and subject to the Architect's review and possible rejection. Should the Architect reject a discrepancy resolution of which they were not notified, the Contractor is fully responsible to correct the installation, including all associated costs, until approval of the installation is given by the Architect.

1.06 EXISTING CONDITIONS
- A. Verify all existing conditions prior to beginning work.
- B. Any existing conditions indicated in the Contract Documents are based on information drawings provided by others and possibly limited field verification. The Contractor shall adjust for actual field conditions at no additional expense to the Owner.
- C. The Contractor shall visit the project site, review existing conditions against the Contract Documents, and familiarize himself with the work prior to bidding and start of the work. By signing the Contract, the Contractor acknowledges the site visit has been completed and the existing conditions are accepted.
- D. The Contractor shall notify the Architect of major discrepancies in writing so the appropriate modifications to the design can be made without delay to the project. The Contractor assumes full responsibility of adjusting for discrepancies of which the Architect is not informed.

1.07 SUBMITTALS
- A. Shop Drawings:
  1. Furnish the following submittals to the Architect for review by the Engineer:
     - a. Provide product data and shop drawings for vibration isolation.
     - b. Provide balancing firm qualifications and final test report for Testing, Adjusting, and Balancing.
     - c. Provide product data for duct insulation.
     - d. Provide product data for grease duct fireproofing (if specified).
     - e. Provide product data for HVAC piping insulation.
     - f. Provide product data and shop drawings for HVAC ductwork.
     - g. Provide product data for air duct accessories.
     - h. Provide product data and shop drawings for HVAC power ventilators.
     - i. Provide product data and shop drawings for air outlets and inlets.
     - j. Provide product data and shop drawings for packaged rooftop units.
  2. Submittals other than those listed above will not be reviewed and will be returned stating as such.
  3. Shop drawings shall be prepared by a manufacturer's representative, and shall contain names of the manufacturer and cut sheets of equipment to be used on the project. Use manufacturer's specification sheets identified by number indicated on drawings or schedules. Indicate catalog number on the cut sheets. As applicable, provide construction data, weight and dimensional data, voltage ratings, performance data, listing data, pump curves, fan curves and sound data as part of the shop drawing submittal.
  4. Submittals are reviewed only for general compliance with the Contract Documents. Dimensions, quantities and details are not checked during submittal review. Review of the submittals does not relieve the Contractor of the responsibility for providing all materials, equipment and accessories necessary for a complete and operational system meeting the requirements of the project and the intent of the Contract Documents. The responsibility for coordination of substituted materials and equipment lies solely with the substituting Contractor.
  5. Electrical Characteristics: Verify that proper power supply is available prior to ordering equipment. Verify proper voltage, phase and current rating of power supply and inform Engineer of any deviations prior to order, connection of equipment or start-up. Responsibility for verification of proper power supply voltage and any product returns or damage resulting from incorrect connections shall rest with this Contractor.
- B. Test Reports: Provide Testing, Adjusting, and Balancing (TAB) and Commissioning reports to the Architect for review by the Engineer. All other reports shall be provided to the Owner.

1.08 QUALITY ASSURANCE
- A. Manufacturer Qualifications: Company specializing in manufacturing the Products specified in this section with minimum five years experience.
- B. Installer Qualifications: Company specializing in performing the work of this section, with minimum five years experience.
- C. Products:
  1. Listed and classified by Underwriters Laboratories Inc. as suitable for the purpose specified and indicated.
- D. All equipment and components shall be free of all rust/corrosion or any visible damage. All items not complying with this requirement shall be replaced without any change in the Contract amount.
- E. Equipment performance and accessories shall be as scheduled on the Drawings and specified herein. Inclusion in both locations is not a prerequisite to inclusion in the Contract. Equipment and accessories specified in either location shall be included in the Contract. Provide all necessary accessories and connections as required for a complete, functional system, including all required components reasonably inferred to as necessary although such components may or may not be specifically indicated in the Contract Documents.
- F. Code or utility company requirements shall supersede any conflicting requirements of this section.

1.09 DELIVERY, STORAGE, AND HANDLING
- A. Rooftop Equipment: Protect units from physical damage by storing off site until roof mounting curbs are in place, ready for immediate installation of units.
- B. Protect insulation from weather and construction traffic, dirt, water, chemical, and mechanical damage, by storing in original wrapping.
- C. Protect dampers and accessories from damage to operating linkages, blades and finishes.
- D. Provide temporary end caps and closures on piping and fittings. Maintain in place until installation.
- E. Protect motors stored on site from weather and moisture by maintaining factory covers and suitable weather-proof covering. For extended outdoor storage, remove motors from equipment and store separately.

1.10 WARRANTY AND GUARANTEE
- A. Submit manufacturer's warranty and ensure forms have been filled out in Owner's name and registered with manufacturer.
- B. Provide one year manufacturer warranty for pumps.
- C. Provide three year manufacturers warranty for solid state ignition modules.
- D. Provide five year manufacturers warranty for compressors, heat exchangers, condensing units, and electronic air cleaners.

PART 2 PRODUCTS

2.01 SUBSTITUTIONS
- A. The manufacturers listed are listed to set minimum standards for quality, design, and functionality. The products of other manufacturers may be submitted, at the Contractor's option, during shop drawing review unless indicated otherwise. The products of other manufacturers shall meet or exceed all requirements of the Contract Documents. The Contractor accepts all responsibility for costs and coordination issues arising out of the substitution of materials or equipment, and the coordination of such substitutions with all other contractors and subcontractors.
- B. The Contractor may use any of the following ductwork, piping or insulation materials at his option, provided the selected material meets with the approval of all State, local authorities and any utility company requirements. Verification of compliance of the selected material is the sole responsibility of the installing Contractor.

PART 3 EXECUTION

3.01 COORDINATION OF WORK
- A. Examine the Contract Documents as a whole for the work of other trades. Coordinate all work accordingly.
- B. Promptly report to the Architect any delay or difficulties encountered in the installation of the work, which might prevent prompt and proper installation, or make it unsuitable to connect with or receive the work of others. Failure to so report shall constitute an acceptance of the work of other trades as being fit and proper for the execution of this work.
- C. Plan, lay out, and coordinate the work with all trades well enough in advance so that it proceeds with a minimum of interference to work that has not been completed and work that is in progress. Inform all trades of openings required for the work and provide all special frames, sleeves, and anchor bolts required. The HVAC system layout may be altered to suit the conditions with engineer approval, prior to the installation of any work and without additional cost to the Owner. Conflicts arising from lack of coordination shall be this Contractor's responsibility.
- D. Perform all work in conformity with the Contract Documents and afford other trades reasonable opportunity for the execution of their work. Properly connect and coordinate this work with the work of other trades at such time and in such a manner as not to delay or interfere with their work.
- E. All roofing penetrations shall be flashed and weather sealed by the roofing manufacturer's authorized roofing contractor at this Contractor's expense. This Contractor shall contract with the factory authorized roofing contractor for the specific roofing system applicable to this Project. The use of an unauthorized roofing contractor may result in removal and replacement of the penetration systems at this Contractor's expense.
- F. All temperature control wiring, thermostat wiring, damper interlock wiring, control panel interlock wiring and miscellaneous low voltage wiring associated with the equipment furnished or installed under this contract shall be furnished and installed by the mechanical contractor or his sub-contractor. All wiring installed under this contract shall be in full compliance with the National Electrical Code, all State and local codes and requirements of the Electrical Specifications for this project.

3.02 EXAMINATION
- A. Verify field measurements are as indicated on the Drawings.
- B. Verify all equipment locations prior to rough-in. Maintain adequate equipment service clearance per manufacturer and code.
- C. Verify routing of all ductwork and piping in field prior to fabrication or installation. Verify adequate clearance with structure, light fixtures, and ceiling heights.
- D. Verify that proper fuel and power supply is available for connection.

3.03 INTERFACE WITH OTHER PRODUCTS
- A. Install all ductwork, pipe, equipment, and accessories to preserve fire resistance rating of partitions and other elements, using materials and methods specified.

3.04 FIELD QUALITY CONTROL
- A. Provide tests as necessary to establish the adequacy, quality, safety, completed status, and suitable operation of each system. Tests shall be conducted under the supervision of the Architect.

3.05 CLEANING AND REPAIR
- A. Clean fire suppression parts to remove harmful materials.
- B. Clean exposed surfaces of all ductwork pipe, equipment, and accessories of all dirt, debris, splatter, and other deleterious materials. Follow the manufacturer's recommendations for cleaning as applicable.
- C. Repair or replace damaged ductwork, pipe, equipment, and accessories, as directed by and to the satisfaction of the Architect, where marring or disfigurement has occurred. All pipe, equipment, and accessories shall be new.

3.06 PROJECT CLOSEOUT
- A. Project Record Documents: At project closeout, provide one printed copy and one electronic copy of the project record documents to the Owner. Record documents will not be reviewed by the Engineer.
- B. Record Drawings: Information contained on project record drawings shall include, as a minimum:
  1. Actual locations of all equipment, ductwork, air inlets/outlets, accessories, etc.
  2. Actual routing of ductwork with sizes and elevations.
  3. Actual locations of control devices including valves and volume dampers.
- C. Operation and Maintenance Data: Provide descriptive literature, maintenance and operation data for all hvac equipment, control systems, accessories, and materials used. Include maintenance procedures, intervals, and parts list of each item installed under this contract. Include all manufacturer's guarantees and warranties.
- D. Maintenance Materials: At project closeout, furnish to the Owner the following:
  1. One set of replacement filters for all hvac equipment.
  2. The maintenance contract for the hvac system, if applicable.
- E. Test Reports: Submit to the Owner all testing reports.

END OF SECTION

SECTION 230548 - VIBRATION AND SEISMIC CONTROLS FOR HVAC PIPING AND EQUIPMENT

PART 1 GENERAL

1.01 SECTION INCLUDES
- A. Vibration isolators.
- B. Seismic restraints.
- C. Equipment:
  1. Fans, axial and centrifugal
  2. Packaged roof top equipment

1.02 SUBMITTALS
- A. Product Data: Provide schedule of vibration isolator type with location and load on each.

PART 2 PRODUCTS

2.01 MANUFACTURERS
- A. Isolation Technology, Inc.; Kinetics Noise Control, Inc.; Mason Industries.

2.02 VIBRATION ISOLATORS
- A. Restrained Open Spring Isolators:
  1. Springs: Minimum horizontal stiffness equal to 75 percent vertical stiffness, with working deflection between 0.3 and 0.6 of maximum deflection. Color code springs for load carrying capacity.
  2. Spring Mounts: Provide with leveling devices, minimum 0.25 inch thick neoprene sound pads, and zinc chromate plated hardware.
  3. Sound Pads: Size for minimum deflection of 0.05 inch; meet requirements for neoprene pad isolators.
  4. Restraint: Provide heavy mounting frame and limit stops.
  5. For Exterior and Humid Areas: Hot dipped galvanized housings and neoprene coated springs.
- B. Spring Hanger:
  1. Springs: Minimum horizontal stiffness equal to 75 percent vertical stiffness, with working deflection between 0.3 and 0.6 of maximum deflection. Color code springs for load carrying capacity.
  2. Housings: Incorporate neoprene isolation pad meeting requirements for neoprene pad isolators or rubber hanger with threaded insert.
  3. Misalignment: Capable of 20 degree hanger rod misalignment.
  4. For Exterior and Humid Areas: Hot dipped galvanized housings and neoprene coated springs.
- C. Neoprene Pad Isolators:
  1. Rubber or neoprene waffle pads.
     - a. Hardness: 30 durometer.
     - b. Thickness: Minimum 1/2 inch.
     - c. Maximum Loading: 50 psi.
     - d. Rib Height: Maximum 0.7 times width.
  2. Configuration: Single layer.
- D. Rubber Mount or Hanger: Molded rubber designed for 0.4 inch deflection with threaded insert.
- E. Glass Fiber Pads: Neoprene jacketed pre-compressed molded glass fiber.

2.03 SEISMIC RESTRAINTS
- A. Type: Non-directional and double acting unit consisting of interlocking steel members restrained by neoprene elements.
- B. Elements: Replaceable neoprene, minimum of 0.75 inch thick with minimum 1/8 inch air gap.
- C. Capacity: 4 times load assigned to mount groupings at 0.4 inch deflection.
- D. Attachment Points and Fasteners: Capable of withstanding 3 times rated load capacity of seismic snubber.

PART 3 EXECUTION

3.01 INSTALLATION
- A. Install in accordance with manufacturer's instructions.
- B. On closed spring isolators, adjust so side stabilizers are clear under normal operating conditions.
- C. Prior to making piping connections to equipment with operating weights substantially different from installed weights, block up equipment with temporary shims to final height. When full load is applied, adjust isolators to load to allow shim removal.
- D. Support piping connections to equipment mounted on isolators using isolators or resilient hangers to nearest flexible pipe connector.
- E. Provide flexible connections on all piping and ductwork connections to equipment. Refer to other sections of this Specification for the acceptable types of flexible connectors to be used.
- F. Selection of type, thickness and deflection of vibration isolation shall be by the vibration control manufacturer based on the specific equipment type and size, as scheduled on the Drawings and indicated below.

3.02 SCHEDULES
- A. Equipment Isolation Schedule: (Minimum deflection as sized by the isolation equipment manufacturer.)
  1. Fans, axial and centrifugal.
     - a. Small fans up to 22" diameter wheel:
       1. Rubber Mount or Hanger
  2. Packaged roof top equipment.
     - a. Above grade roof structures:
       1. Base: Roof Curb.
       2. Isolation: Full perimeter Neoprene Pad between curb and units. Provide restrained spring vibration isolation curbs when indicated on the Drawings.

END OF SECTION

SECTION 230593 - TESTING, ADJUSTING, AND BALANCING FOR HVAC

PART 1 GENERAL

1.01 SECTION INCLUDES
- A. Testing, adjustment, and balancing of air systems.
  1. Air handling units; Packaged heating and/or cooling equipment; Fans. (Exhaust and supply); Coils; Terminal equipment; Air inlets and outlets. (Diffusers, grilles, louvers, etc.)
- B. Measurement of final operating condition of HVAC systems.
- C. Independent agency requirements.

1.02 SUBMITTALS
- A. Qualifications: Submit name of adjusting and balancing agency and TAB supervisor for approval within 30 days after award of Contract. Provide TAB Agency qualifications.
- B. Final Report: Indicate deficiencies in systems that would prevent proper testing, adjusting, and balancing of systems and equipment to achieve specified performance.
  1. Submit to the Construction Manager within two weeks after completion of testing, adjusting, and balancing.
  2. Provide reports in bound manuals, complete with index page and indexing tabs, with cover identification at front and side. Include set of reduced drawings with air outlets and equipment identified to correspond with data sheets, and indicating thermostat and equipment locations.
  3. Include actual instrument list, with manufacturer name, serial number, and date of calibration.
  4. Form of Test Reports: Where the TAB standard being followed recommends a report format use that; otherwise, follow ASHRAE Std 111.
  5. Include the following on the title page of each report:
     - a. Name, address and telephone number of Testing, Adjusting, and Balancing Agency.
     - b. Project: Name; location; Engineer; Contractor, Report date.

1.03 WARRANTY
- A. The Balancing Contractor shall be prepared to return to the site at no additional cost to re-adjust air quantities as required to provide uniform temperatures, eliminate drafts and objectionable noises during the first year of occupancy, including one full heating and one full cooling season, after the acceptance of the final balancing report.

PART 2 PRODUCTS - NOT USED

PART 3 EXECUTION

3.01 GENERAL REQUIREMENTS
- A. Perform total system balance in accordance with one of the following:
  1. AABC MN-1, AABC National Standards for Total System Balance.
  2. ASHRAE Std 111, Practices for Measurement, Testing, Adjusting and Balancing of Building Heating, Ventilation, Air-Conditioning, and Refrigeration Systems.
  3. NEBB Procedural Standards for Testing Adjusting Balancing of Environmental Systems.
  4. SMACNA HVAC Systems Testing, Adjusting, and Balancing.
- B. Begin work after completion of systems to be tested, adjusted, or balanced and complete work prior to Substantial Completion of the Project.
- C. Where HVAC systems and/or components interface with life safety systems, including fire and smoke detection, alarm, and control, coordinate scheduling and testing and inspection procedures with the authorities having jurisdiction.
- D. TAB Agency Qualifications:
  1. Company specializing in the testing, adjusting, and balancing of systems specified in this Section with a minimum of five years experience.
  2. Certified by one of the following:
     - a. AABC, Associated Air Balance Council; upon completion submit AABC National Performance Guaranty.
     - b. NEBB, National Environmental Balancing Bureau.
     - c. TABB, The Testing, Adjusting, and Balancing Bureau of National Energy Management Institute.
  3. The TAB Agency must be a completely independent, third party balancing contractor with no financial, common owners or other ties to the installing contractors.
- E. TAB Supervisor and Technician Qualifications: Certified by same organization as TAB agency.

3.02 ADJUSTMENT TOLERANCES
- A. Air Handling Systems; Air Outlets and Inlets; Hydronic Systems: Adjust to within plus or minus 15 percent of design.

3.03 RECORDING AND ADJUSTING
- A. Permanently mark settings of valves, dampers, and other adjustment devices allowing settings to be restored. Set and lock memory stops.
- B. Mark on the Drawings the locations where traverse and other critical measurements were taken and cross reference the location in the final report.

3.04 AIR SYSTEM PROCEDURE
- A. Adjust air handling and distribution systems to provide required or design supply, return, and exhaust air quantities.
- B. Make air quantity measurements in ducts by Pitot tube traverse of entire cross sectional area of duct.
- C. Measure air quantities at air inlets and outlets.
- D. Adjust distribution system to obtain uniform space temperatures free from objectionable drafts and noise.
- E. Use volume control devices to regulate air quantities only to extend that adjustments do not create objectionable air motion or sound levels. Effect volume control by duct internal devices such as dampers and splitters. Do not use diffuser, grille or register integral dampers for balancing adjustments unless the plans do not indicate duct mounted devices.
- F. Vary total system air quantities by adjustment of fan speeds. Provide drive changes required at no additional expense to the Owner. Vary branch air quantities by damper regulation.
- G. Measure static air pressure conditions on air supply units, including filter and coil pressure drops, and total pressure across the fan. Make allowances for 50 percent loading of filters.
- H. Adjust outside air automatic dampers, outside air, return air, and exhaust dampers for design conditions in all operating modes as indicated in the sequence of control.
- I. Measure temperature conditions across outside air, return air, and exhaust dampers to check leakage.
- J. Where modulating dampers are provided, take measurements and balance at extreme conditions and at all intermediate operating conditions specified in the sequence of control. Balance variable volume systems at maximum air flow rate, full cooling, and at minimum air flow rate, full heating.

3.05 SCOPE
- A. Equipment Requiring Testing, Adjusting, and Balancing (if present on the project):
  1. HVAC Pumps; Boilers; All Air Handling Equipment; All Packaged Heating and/or Cooling Equipment; All Coil; All Heat Exchangers; Terminal Heat Transfer Units; Air Terminal Units; Air Inlets and Outlets

3.06 MINIMUM DATA TO BE REPORTED
- A. Report (as applicable to the project):
  1. Summary Comments:
     - a. Design versus final performance
     - b. Notable characteristics of system
     - c. Summary of outdoor and exhaust flows to indicate amount of building pressurization
     - d. Nomenclature used throughout report and test conditions.
- B. Electric Motors and drives:
  1. Manufacturer; Model/Frame; HP/BHP; Phase, voltage, amperage; nameplate, actual, no load; RPM; Service factor; Sheave Make/Size/Bore.
  2. V-Belt Drives: Identification/location; Required driven RPM; Driven sheave, diameter and RPM; Belt, size and quantity;
- C. Cooling and Heating Coils:
  1. Identification/number; Manufacturer
  2. Air flow, design and actual
  3. Air pressure drop, design and actual
  4. Entering and leaving air DB and WB temperature, design and actual
  5. Water flow, design and actual (if applicable)
  6. Water pressure drop, design and actual (if applicable)
  7. Entering and leaving water temperature, design and actual (if applicable)
- D. Air Moving Equipment:
  1. Manufacturer; Model number; Serial number; Arrangement/Class/Discharge
  2. Air flow, specified and actual
  3. Inlet; Discharge; Total static pressure (total external), specified and actual
- E. Air Distribution Tests:
  1. Air terminal number
  2. Room number/location
  3. Terminal type
  4. Terminal size
  5. Area factor
  6. Design velocity
  7. Design air flow
  8. Test (final) velocity
  9. Test (final) air flow
  10. Percent of design air flow

END OF SECTION

SECTION 230713 - DUCT INSULATION

PART 1 GENERAL

1.01 SECTION INCLUDES
- A. Duct insulation.
- B. Duct liner.
- C. Insulation jackets.
- D. Supply, return or exhaust ducts in ceiling spaces.
- E. Supply, return or exhaust ducts in interior unconditioned areas.
- F. Supply, return or exhaust ducts in exposed locations.

1.02 FIELD CONDITIONS
- A. Maintain ambient temperatures and conditions required by manufacturers of adhesives, mastics, and insulation cements.
- B. Maintain temperature during and after installation for minimum period of 24 hours.

PART 2 PRODUCTS

2.01 REQUIREMENTS FOR ALL PRODUCTS OF THIS SECTION
- A. Surface Burning Characteristics: Flame spread/Smoke developed index of 25/50, maximum, when tested in accordance with ASTM E 84, NFPA 255, or UL 723.
- B. Manufacturer: Knauf Fiber Glass; Johns Manville Corporation; Owens Corning Corp.; CertainTeed Corporation.

2.02 GLASS FIBER, FLEXIBLE
- A. Insulation: ASTM C 553; flexible, noncombustible blanket.
  1. 'K' value: 0.31 at 75 degrees F, when tested in accordance with ASTM C 518.
  2. Maximum Service Temperature: 450 degrees F.
  3. Maximum Water Vapor Sorption: 5.0 percent by weight.
- B. Vapor Barrier Jacket:
  1. Kraft paper with glass fiber yarn and bonded to aluminized film.
  2. Moisture Vapor Permeability: 0.029 ng/Pa s m (0.02 perm inch), when tested in accordance with ASTM E 96/E 96M.
  3. Secure with pressure sensitive tape.
- C. Vapor Barrier Tape:
  1. Kraft paper reinforced with glass fiber yarn and bonded to aluminized film, with pressure sensitive rubber based adhesive.
- D. Outdoor Vapor Barrier Mastic:
  1. Vinyl emulsion type acrylic or mastic, compatible with insulation, black color.
- E. Tie Wire: Annealed steel, 16 gage.

2.03 DUCT LINER
- A. Insulation: Incombustible glass fiber complying with ASTM C 1071; flexible blanket, rigid board, and preformed round liner board; impregnated surface and edges coated with acrylic polymer shown to be fungus and bacteria resistant by testing to ASTM G 21.
  1. Apparent Thermal Conductivity: Maximum of 0.31 at 75 degrees F.
  2. Service Temperature: Up to 250 degrees F.
  3. Rated Velocity on Coated Air Side for Air Erosion: 5,000 fpm, minimum.
  4. Minimum Noise Reduction Coefficients:
     - a. 1/2 inch Thickness: 0.30.
     - b. 1 inch Thickness: 0.45.
     - c. 1-1/2 inches Thickness: 0.60.
     - d. 2 inch Thickness: 0.70.
- B. Adhesive: Waterproof, fire-retardant type.
- C. Liner Fasteners: Galvanized steel, self-adhesive pad or impact applied with integral, or press-on head.

PART 3 EXECUTION

3.01 INSTALLATION
- A. Install in accordance with manufacturer's instructions and NAIMA National Insulation Standards.
- B. Insulated ducts conveying air below ambient temperature:
  1. Provide insulation with vapor barrier jackets.
  2. Finish with tape and vapor barrier jacket.
  3. Continue insulation through walls, sleeves, hangers, and other duct penetrations.
  4. Insulate entire system including fittings, joints, flanges, fire dampers, flexible connections, and expansion joints.
- C. Insulated ducts conveying air above ambient temperature:
  1. Provide with or without standard vapor barrier jacket.
  2. Insulate fittings and joints. Where service access is required, bevel and seal ends of insulation.
- D. External Duct Insulation Application:
  1. Secure insulation with vapor barrier with wires and seal jacket joints with vapor barrier adhesive or tape to match jacket.
  2. Secure insulation without vapor barrier with staples, tape, or wires.
  3. Install without sag on underside of duct. Use adhesive or mechanical fasteners where necessary to prevent sagging. Lift duct off trapeze hangers and insert spacers.
  4. Seal vapor barrier penetrations by mechanical fasteners with vapor barrier adhesive.
  5. Stop and point insulation around access doors and damper operators to allow operation without disturbing wrapping.
- E. Duct and Plenum Liner Application:
  1. Adhere insulation with adhesive for 90 percent coverage.
  2. Secure insulation with mechanical liner fasteners. Refer to SMACNA HVAC Duct Construction Standards - Metal and Flexible for spacing.
  3. Seal and smooth joints. Seal and coat transverse joints.
  4. Seal liner surface penetrations with adhesive.
  5. Duct dimensions indicated are net inside dimensions required for air flow. Increase duct size to allow for insulation thickness.

3.02 SCHEDULES
- A. The Contractor may use any of the following insulating materials, at his option, provided the selected material meets with the approval of all State, local authorities and utility company requirements. Verification of compliance of the selected insulating material and thickness with all State and local codes and utility company requirements is the sole responsibility of the installing Contractor.
- B. Supply air ducts in ceiling spaces:
  1. Flexible Glass Fiber Duct Insulation: 1-1/2 inches thick.
  2. Flexible Glass Fiber Duct Liner Insulation: 1 inches thick.
- C. Supply, return or exhaust air ducts in crawl spaces, attics or other unconditioned areas:
  1. Flexible Glass Fiber Duct Insulation: 3 inches thick.
- D. Supply air ducts exposed in finished areas:
  1. Flexible Glass Fiber Duct Liner Insulation: 1 inches thick.
- E. Return or exhaust air ducts exposed in finished areas: None.

END OF SECTION

SECTION 233100 - HVAC DUCTS AND CASINGS

PART 1 GENERAL

1.01 SECTION INCLUDES
- A. Metal ductwork.
- B. Nonmetal ductwork.
- C. Round spiral ductwork
- D. Duct cleaning.

1.02 PERFORMANCE REQUIREMENTS
- A. No variation of duct configuration or sizes permitted except by written permission. Size round ducts installed in place of rectangular ducts in accordance with ASHRAE table of equivalent rectangular and round ducts, only after approval of the Engineer. Sizes shown on design drawings are air dimensions. Contractor may increase duct size without engineer approval, provided all ceiling and shaft clearances can be maintained. Additional charges for increased duct size will not be accepted by the owner.
- B. Report all conflicts with structure or other obstructions, prior to fabrication of any ductwork. Suitable adjustments in the sizes of ducts shall be accommodated without any additional expense to the Owner.

1.03 SUBMITTALS
- A. Shop Drawings: Indicate duct fittings, particulars such as gages, sizes, welds, and configuration prior to start of work for all systems. No ductwork shall be fabricated until engineer approved shop drawings have been received by the Contractor. Identify on ductwork shop drawings any deviations in sizes or shapes made necessary by the obstructions of other trades.
- B. Test Reports: Indicate pressure tests performed. Include date, section tested, test pressure, and leakage rate, following SMACNA (LEAK) - HVAC Air Duct Leakage Test Manual.

1.04 REGULATORY REQUIREMENTS
- A. Construct ductwork to NFPA 90A, NFPA 90B, and NFPA 96 standards.
- B. Code or utility company requirements shall supersede any conflicting requirements of this Section.

1.05 FIELD CONDITIONS
- A. Do not install duct sealants when temperatures are less than those recommended by sealant manufacturers.
- B. Maintain temperatures within acceptable range during and after installation of duct sealants.

PART 2 PRODUCTS

2.01 MATERIALS
- A. Galvanized Steel Ducts: Hot-dipped galvanized steel sheet, ASTM A 653/A 653M FS Type B, with G90/Z275 coating.
- B. Steel Ducts: ASTM A 1008/A 1008M, Designation CS, cold-rolled commercial steel.
- C. Aluminum Ducts: ASTM B 209 (ASTM B 209M); aluminum sheet, alloy 3003-H14. Aluminum Connectors and Bar Stock: Alloy 6061-T651 or of equivalent strength.
- D. Insulated Flexible Ducts:
  1. The Contractor may use any of the following ductwork materials, at his option, provided the selected material meets with the approval of all State, local authorities and utility company requirements. Verification of compliance of the selected ductwork material is the sole responsibility of the installing Contractor.
  2. Two ply vinyl film supported by helically wound spring steel wire; fiberglass insulation; aluminized vapor barrier film.
     - a. Pressure Rating: 10 inches WG positive and 1.0 inches WG negative.
     - b. Maximum Velocity: 4000 fpm.
     - c. Temperature Range: -10 degrees F to 160 degrees F.
     - d. Minimum R-Value: 4.2 or greater as required by the applicable energy codes.
  3. Black polymer film supported by helically wound spring steel wire; fiberglass insulation; aluminized vapor barrier film.
     - a. Pressure Rating: 4 inches WG positive and 0.5 inches WG negative.
     - b. Maximum Velocity: 4000 fpm.
     - c. Temperature Range: -20 degrees F to 175 degrees F.
     - d. Minimum R-Value: 4.2 or greater as required by the applicable energy codes.
  4. Multiple layers of aluminum laminate supported by helically wound spring steel wire; fiberglass insulation; aluminized vapor barrier film.
     - a. Pressure Rating: 10 inches WG positive and 1.0 inches negative.
     - b. Maximum Velocity: 4000 fpm.
     - c. Temperature Range: -20 degrees F to 210 degrees F.
     - d. Minimum R-Value: 4.2 or greater as required by the applicable energy codes.
  5. UL 181, Class 1, aluminum laminate and polyester film with latex adhesive supported by helically wound spring steel wire; fiberglass insulation; aluminized vapor barrier film.
     - a. Pressure Rating: 10 inches WG positive and 1.0 inches WG negative.
     - b. Maximum Velocity: 4000 fpm.
     - c. Temperature Range: -20 degrees F to 210 degrees F.
     - d. Minimum R-Value: 4.2 or greater as required by the applicable energy codes.
  6. UL 181, Class 0, interlocking spiral of aluminum foil; fiberglass insulation; aluminized vapor barrier film.
     - a. Pressure Rating: 8 inches WG positive or negative.
     - b. Maximum Velocity: 5000 fpm.
     - c. Temperature Range: -20 degrees F to 250 degrees F.
     - d. Minimum R-Value: 4.2 or greater as required by the applicable energy codes.
- E. Joint Sealers and Sealants: Non-hardening, water resistant, mildew and mold resistant.
  1. Type: Heavy mastic or liquid used alone or with tape, suitable for joint configuration and compatible with substrates, and recommended by manufacturer for pressure class of ducts.
  2. VOC Content: Not more than 250 g/L, excluding water.
  3. Surface Burning Characteristics: Flame spread of zero, smoke developed of zero, when tested in accordance with ASTM E 84.
  4. For Use With Flexible Ducts: UL labeled.
  5. Ductwork Exposed to the Weather: Hard cast VersaGrip 102, (VG-102), UL 181-AM compliant duct joint sealer, as manufactured by Carlisle, with fiberglass scrim tape reinforcement on all seams and joints, lateral and longitudinal.
- F. Hanger Rod: ASTM A 36/A 36M; steel; threaded both ends, threaded one end, or continuously threaded.

2.02 DUCTWORK FABRICATION
- A. Fabricate, support and seal in accordance with SMACNA HVAC Duct Construction Standards - Metal and Flexible, and as indicated. Provide duct material, gages, reinforcing, and sealing for operating pressures indicated.
- B. Construct T's, bends, and elbows with radius of not less than 1-1/2 times width of duct on centerline. Where not possible and where rectangular elbows must be used, provide turning vanes. Where acoustical lining is indicated, provide turning vanes of perforated metal with glass fiber insulation.
- C. Increase duct sizes gradually, not exceeding 15 degrees divergence wherever possible; maximum 30 degrees divergence upstream of equipment and 45 degrees convergence downstream.
- D. Fabricate continuously welded round and oval duct fittings two gages heavier than duct gages indicated in SMACNA Standard. Joints shall be minimum 4 inch cemented slip joint, brazed or electric welded. Prime coat welded joints.
- E. Provide standard 45 degree lateral wye takeoffs unless otherwise indicated where 90 degree conical tee connections may be used.
- F. Where ducts are connected to exterior wall louvers and duct outlet is smaller than louver frame, provide blank-out panels sealing louver area around duct. Use same material as duct, painted black on exterior side; seal to louver frame and duct.

2.03 DUCT MANUFACTURERS
- A. Metal-Fab, Inc.; SEMCO Incorporated; United McGill Corporation.

2.04 MANUFACTURED METAL DUCTWORK AND FITTINGS
- A. Manufacture in accordance with SMACNA HVAC Duct Construction Standards - Metal and Flexible, and as indicated. Provide duct material, gages, reinforcing, and sealing for operating pressures indicated.
- B. Round Spiral Ducts: Machine made from round spiral lockseam duct with light reinforcing corrugations; fittings manufactured of at least two gages heavier metal than duct.
- C. Double Wall Insulated Round Ducts: Round spiral lockseam duct with galvanized steel outer wall, 1 inch thick fiberglass insulation, perforated galvanized steel inner wall; fitting with solid inner wall.
- D. Transverse Duct Connection System: SMACNA "E" rated rigidly class connection, interlocking angle and duct edge connection system with sealant, gasket, cleats, and corner clips.

PART 3 EXECUTION

3.01 EXAMINATION
- A. Examine drawings for the Architectural, Structural, Electrical and all other trades prior to preparation of ductwork shop drawings and prior to the fabrication of any ductwork.
- B. Resolve any conflicts encountered with the Engineer prior to fabrication.
- C. Identify on ductwork shop drawings any deviations in sizes or shapes made necessary by the obstructions of other trades.

3.02 INSTALLATION
- A. Install in accordance with manufacturer's instructions.
- B. Duct sizes indicated are inside clear dimensions. For lined ducts, maintain sizes inside lining.
- C. Install and seal metal and flexible ducts in accordance with SMACNA HVAC Duct Construction Standards - Metal and Flexible.
- D. Provide openings in ductwork where required to accommodate thermometers and controllers. Provide pilot tube openings where required for testing of systems, complete with metal can with spring device or screw to ensure against air leakage. Where openings are provided in insulated ductwork, install insulation material inside a metal ring.
- E. Locate ducts with sufficient space around equipment to allow normal operating and maintenance activities.
- F. Use crimp joints with or without bead for joining round duct sizes 8 inch and smaller with crimp in direction of air flow.
- G. Use double nuts and lock washers on threaded rod supports.
- H. Connect flexible ducts to metal ducts with draw bands.
- I. Support flexible duct runs every five feet in the horizontal direction to avoid dips and sags.
- J. Connect terminal units to supply ducts with one foot maximum length of flexible duct. Do not use flexible duct to change direction.
- K. Connect diffusers to low pressure ducts directly or with 5 feet maximum length of flexible duct held in place with strap or clamp. Longer duct lengths are acceptable if depicted on the design drawings and allowed per local code. A maximum of one 90 degree bend, or equivalent, will be allowed in flexible duct runs.
- L. During construction provide temporary closures of metal or taped polyethylene on open ductwork to prevent construction dust from entering ductwork system.
- M. All exposed ducts in finished areas must be completely free from all dents or imperfections in the galvanized coating and shall be sealed CAREFULLY AND NEATLY with duct sealer completely contained within the joint. Duct wrap will not be permitted in exposed locations
- N. All roofing penetrations shall be flashed and weather sealed by the roofing manufacturer's authorized roofing contractor at this Contractor's expense. This Contractor shall contract with the factory authorized roofing contractor for the specific roofing system applicable to this Project. The use of an unauthorized roofing contractor may result in removal and replacement of the penetration systems at this Contractor's expense.

3.03 CLEANING
- A. Clean duct system and force air at high velocity through duct to remove accumulated dust or clean with high power vacuum machines. To obtain sufficient air, clean half the system at a time. Protect equipment which may be harmed by excessive dirt with temporary filters, or bypass during cleaning.

3.04 SCHEDULES
- A. Ductwork Material:
- B. The Contractor may use any of the following ductwork materials, at his option, provided the selected material meets with the approval of all State, local authorities and utility company requirements. Verification of compliance of the selected piping material is the sole responsibility of the installing Contractor.
  1. Low Velocity Supply (Heating Systems): Galvanized Steel, Aluminum.
  2. Low Velocity Supply (System with Cooling Coils): Galvanized Steel, Aluminum.
  3. Return and Relief: Galvanized Steel, Aluminum.
  4. General Exhaust: Galvanized Steel, Aluminum.
  5. Outside Air Intake: Galvanized Steel.
- C. Ductwork Pressure Class:
  1. Low Velocity Supply (Heating Systems): Scheduled System ESP+0.25", round up to next higher pressure class.
  2. Low Velocity Supply (Systems with Cooling): Scheduled System ESP +0.5", round up to next higher pressure class.
  3. Return and Relief: 1 inch.
  4. General Exhaust: Scheduled System ESP +1.0", round up to next higher pressure class.
  5. Outside Air Intake: 1 inch.

END OF SECTION

SECTION 233300 - AIR DUCT ACCESSORIES

PART 1 GENERAL

1.01 SECTION INCLUDES
- A. Air turning devices/extractors.
- B. Volume control dampers.
- C. Flexible duct connections.
- D. Duct access doors.

PART 2 PRODUCTS

2.01 AIR TURNING DEVICES/EXTRACTORS
- A. Manufacturers: Krueger; Ruskin Company; Titus.
- B. Multi-blade device with blades aligned in short dimension; steel or aluminum construction; with individually adjustable blades, mounting straps.

2.02 VOLUME CONTROL DAMPERS
- A. Manufacturers: Louvers & Dampers, Inc.; Nailor Industries Inc.; Ruskin Company; Prefco Inc.
- B. Fabricate in accordance with SMACNA HVAC Duct Construction Standards - Metal and Flexible, and as indicated.
- C. Single Blade Dampers: Fabricate for duct sizes up to 6 x 30 inch.
- D. Multi-Blade Damper: Fabricate of opposed blade pattern with maximum blade sizes 8 x 72 inch. Assemble center and edge crimped blades in prime coated or galvanized channel frame with suitable hardware.
- E. End Bearings: Except in round ducts 12 inches and smaller, provide end bearings. On multiple blade dampers, provide oil-impregnated nylon or sintered bronze bearings.
- F. The contractor shall provide either a mechanical or electrical cable operated system wherever dampers are located in non-accessible areas.
  1. Mechanical cable operator system shall be similar and equal to Young Regulator Company, "Bowden Cable Control" system including damper, flexible cable with casing and concealed ceiling regulator control.
  2. Electrically operated damper control system shall be similar and equal to United Enertech Corporation, "Power Balance" system including motor operated damper, RJ-11 plenum rated cabling and flush ceiling or wall mounted RJ-11 jack in remote plate. Include one hand held battery pack operator pack to be delivered to the Owner upon completion of the balancing.

2.03 FLEXIBLE DUCT CONNECTIONS
- A. Fabricate in accordance with SMACNA HVAC Duct Construction Standards - Metal and Flexible, and as indicated.
- B. Flexible Duct Connections: Fabric crimped into metal edging strip.
  1. Fabric: UL listed fire-retardant neoprene coated woven glass fiber fabric to NFPA 90A, minimum density 30 oz per sq yd.
     - a. Net Fabric Width: Approximately 2 inches wide.
  2. Metal: 3 inches wide, 24 gage thick galvanized steel.

2.04 DUCT ACCESS DOORS
- A. Manufacturers: Acudor Products Inc.; Nailor Industries Inc.; Ruskin Company; SEMCO Incorporated.
- B. Fabricate in accordance with SMACNA HVAC Duct Construction Standards - Metal and Flexible, and as indicated.
- C. Fabrication: Rigid and close-fitting of galvanized steel with sealing gaskets and quick fastening locking devices. For insulated ducts, install minimum 1 inch thick insulation with sheet metal cover.
  1. Less Than 12 inches Square: Secure with sash locks.
  2. Up to 18 inches Square: Provide two hinges and two sash locks.
- D. Access doors with sheet metal screw fasteners are not acceptable.

PART 3 EXECUTION

3.01 INSTALLATION
- A. Install accessories in accordance with manufacturer's instructions, NFPA 90A, and follow SMACNA HVAC Duct Construction Standards - Metal and Flexible. Duct construction and pressure class.
- B. Provide duct access doors for inspection and cleaning before and after filters, coils, fans, automatic dampers, at fire dampers, combination fire and smoke dampers, and elsewhere as indicated. Provide minimum 8 x 8 inch size for hand access, 18 x 18 inch size for shoulder access, and as indicated. Provide 4 x 4 inch for balancing dampers only. Review locations prior to fabrication.
- C. Locate all dampers and control elements in accessible areas wherever possible to avoid access doors. Provide ceiling access doors for access to all dampers and control elements located above inaccessible ceiling areas. Provide minimum 12 x 12 inch size for hand access, 18 x 18 inch size for shoulder access, and as indicated. Provide 4 x 4 inch for balancing dampers only. Review locations prior to fabrication.
- D. Provide balancing dampers at points on supply, return, and exhaust systems where branches are taken from larger ducts as required for air balancing. Install minimum 2 duct widths from duct take-off.
- E. Provide balancing dampers on duct take-off to diffusers, grilles, and registers, regardless of whether dampers are specified as part of the diffuser, grille, or register assembly. Do not locate dampers closer than 5 feet or 10 duct diameters from the air terminal device, whichever is greater.
- F. At fans and motorized equipment associated with ducts, provide flexible duct connections immediately adjacent to the equipment.
- G. At equipment supported by vibration isolators, provide flexible duct connections immediately adjacent to the equipment

END OF SECTION

SECTION 233423 - HVAC POWER VENTILATORS

PART 1 GENERAL

1.01 SECTION INCLUDES
- A. Roof exhausters.
- B. Cabinet and ceiling fans.

PART 2 PRODUCTS

2.01 MANUFACTURERS
- A. Greenheck; Loren Cook Company; PennBarry; CaptiveAire.

2.02 POWER VENTILATORS - GENERAL
- A. Performance Ratings: Determined in accordance with AMCA 210 and bearing the AMCA Certified Rating Seal.
- B. Sound Ratings: AMCA 301, tested to AMCA 300, and bearing AMCA Certified Sound Rating Seal.
- C. Fabrication: Conform to AMCA 99.
- D. UL Compliance: UL listed and labeled, designed, manufactured, and tested as suitable for the purpose specified and indicated.

2.03 ROOF EXHAUSTERS AND VENTILATORS
- A. Fan Unit: V-belt or direct driven as indicated, with spun aluminum housing; resilient mounted motor; 1/2 inch mesh, 0.62 inch thick aluminum wire birdscreen; square base to suit roof curb with continuous curb gaskets.
- B. Roof Curb: 20 inch high above the finished roof surface (compensate for roof insulation thickness at fan location) self-flashing of galvanized steel or aluminum construction with continuously welded seams, built-in cant strips, insulation and curb bottom, and factory installed nailer strip.
- C. Disconnect Switch: Factory wired, non-fusible, in housing for thermal overload protected motor.
- D. Backdraft Damper: Motor actuated (or gravity damper if depicted on design drawings), aluminum multiple blade construction, felt edged with offset hinge pin, nylon bearings, blades linked, and line voltage motor drive, power open, spring return.
- E. Sheaves: Cast iron or steel, dynamically balanced, bored to fit shafts and keyed; variable and adjustable pitch motor sheave selected so required rpm is obtained with sheaves set at mid-position; fan shaft with self-aligning pre-lubricated ball bearings.

2.04 CABINET AND CEILING FANS
- A. Centrifugal Fan Unit: V-belt or direct driven with galvanized steel housing lined with acoustic insulation, resilient mounted motor, gravity backdraft damper in discharge.
- B. Disconnect Switch: Cord and plug in housing for thermal overload protected motor.
- C. Grille: Aluminum with baked white enamel finish or molded white plastic as specified on the Drawings.
- D. Backdraft Damper: Gravity actuated, aluminum blade construction, felt edged with offset hinge pin, nylon bearings, blades linked.
- E. Sheaves: Cast iron or steel, dynamically balanced, bored to fit shafts and keyed; variable and adjustable pitch motor sheaves selected so required rpm is obtained with sheaves set at mid-position; fan shaft with self-aligning pre-lubricated ball bearings.

PART 3 EXECUTION

3.01 INSTALLATION
- A. Install in accordance with manufacturer's instructions.
- B. Provide sheaves required for final air balance at no additional expense to the project.
- C. Secure roof and wall exhausters with cadmium plated steel lag screws to roof curb or structure.
- D. Extend ducts to roof and wall exhausters into roof curb or wall structure. Counterflash duct to roof or wall opening.
- E. Install backdraft dampers (gravity or motorized as depicted on design drawings) on inlet to roof and wall exhausters.
- F. All roofing penetrations shall be flashed and weather sealed by the roofing manufacturer's authorized roofing contractor at this Contractor's expense. This Contractor shall contract with the factory authorized roofing contractor for the specific roofing system applicable to this project. The use of an unauthorized roofing contractor may result in removal and replacement of the penetration systems at this Contractor's expense.
- G. Hung Cabinet Fans:
  1. Install fans with resilient mountings and flexible electrical leads.
  2. Install flexible connections specified between fan and ductwork. Ensure metal bands of connectors are parallel with minimum one inch flex between ductwork and fan while running.
- H. Provide gravity backdraft dampers on outlet from cabinet and ceiling fans and as indicated.

END OF SECTION

SECTION 233700 - AIR OUTLETS AND INLETS

PART 1 GENERAL

1.01 SECTION INCLUDES
- A. Rectangular ceiling diffusers.
- B. Grid core exhaust and return grilles.
- C. Wall registers and grilles.

1.02 SUBMITTALS
- A. Product Data: Provide data for equipment required for this project. Review outlets and inlets as to size, finish, and type of mounting prior to submission. Submit schedule of outlets and inlets showing type, size, location, application, accessories, and noise level.

1.03 QUALITY ASSURANCE
- A. Test and rate air outlet and inlet performance in accordance with ASHRAE Std 70.
- B. Test and rate louver performance in accordance with AMCA 500-L.
- C. Code requirements shall supersede any conflicting requirements of this Section.

1.04 QUALIFICATIONS
- A. Manufacturer Qualifications: Company specializing in manufacturing the type of products specified in this Section, with minimum five years of documented experience.

PART 2 PRODUCTS

2.01 MANUFACTURERS
- A. Titus; Krueger; Price Industries; Nailor Industries Inc.; Hart & Cooley; Ruskin, Greenheck.

2.02 RECTANGULAR CEILING DIFFUSERS
- A. Type: Square, adjustable pattern, stamped, multi-core, or architectural plaque diffuser to discharge air in 360 degree pattern with sectorizing baffles where indicated.
- B. Frame: Inverted T-bar type. In plaster ceilings, provide plaster frame and ceiling frame. (To allow lift-out removal of the diffuser without removal of the plaster frame.)
- C. Fabrication: Steel with baked enamel off-white finish.
- D. Accessories: Opposed blade damper and multi-louvered equalizing grid with damper adjustable from diffuser face.

2.03 GRID CORE EXHAUST AND RETURN GRILLES
- A. Type: Fixed grilles of 1/2 x 1/2 x 1 inch louvers.
- B. Fabrication: Aluminum with factory off-white enamel finish.
- C. Frame: 1-1/4 inch margin with countersunk screw mounting.
- D. Frame: Channel lay-in frame for suspended grid ceilings where face size exceeds 18 x 18 inch.
- E. Damper (if specified on drawings): Integral, gang-operated, opposed blade type with removable key operator, operable from face.

2.04 WALL SUPPLY REGISTERS/GRILLES
- A. Type: Streamlined and individually adjustable blades, 3/4 inch minimum depth, 3/4 inch maximum spacing with spring or other device to set blades, horizontal face, double deflection.
- B. Frame: 1-1/4 inch margin with countersunk screw mounting and gasket.
- C. Fabrication: Steel with 20 gage minimum frames and 22 gage minimum blades, steel and aluminum with 20 gage minimum frame, or aluminum extrusions, with factory off-white enamel finish.
- D. Damper: Integral, gang-operated opposed blade type with removable key operator, operable from face.
- E. Rough Service: Provide front pivoted or welded in place blades, securely fastened to be immobile.

PART 3 EXECUTION

3.01 INSTALLATION
- A. Install in accordance with manufacturer's instructions.
- B. Check location of outlets and inlets and make necessary adjustments in position to conform with architectural features, symmetry, and lighting arrangement.
- C. Install diffusers to ductwork with air tight connection.
- D. Provide balancing dampers on duct take-off to diffusers, and grilles and registers, despite whether dampers are specified as part of the diffuser, or grille and register assembly.
- E. Paint ductwork visible behind air outlets and inlets matte black.

END OF SECTION

SECTION 237413.16 - PACKAGED OUTDOOR ROOF TOP UNITS - HEAT PUMP

PART 1 GENERAL

1.01 SECTION INCLUDES
- A. Packaged roof top units.
- B. Thermostat controls.
- C. Roof mounting curb and base.
- D. Economizer.
- E. Power exhaust.

PART 2 PRODUCTS

2.01 MANUFACTURERS
- A. Carrier Corporation; Trane Inc.; Lennox Industries; York; AAON Incorporated.

2.02 AIR CONDITIONING UNITS
- A. General: Roof mounted units having electric heating elements when indicated and electric refrigeration.
- B. Description: Self-contained, packaged, factory assembled and prewired, consisting of cabinet and frame, supply fan, when indicated provide electric heating elements, controls, air filters, refrigerant cooling coil and compressor, dry bulb economizer and power exhaust fan where indicated on the drawings, condenser coil and condenser fan.
- C. Electrical Characteristics: As scheduled on the Drawings.
- D. Disconnect Switch: Factory mount disconnect switch on equipment.

2.03 FABRICATION
- A. Cabinet: Steel with baked enamel finish, including access panels with screwdriver operated flush cam type fasteners or doors with piano hinges with locking handles. Structural members shall be minimum 18 gage, with access doors or panels of minimum 20 gage.
- B. Insulation: Minimum 1/2 inch thick neoprene coated glass fiber with edges protected from erosion.
- C. Supply Fan: Forward curved centrifugal type, resiliently mounted with V-belt drive, adjustable variable pitch motor pulley, and rubber isolated hinge mounted motor or direct drive as indicated. Isolate complete fan assembly.
  1. Fans for units with a mechanical cooling capacity greater than or equal to 65,000 Btu/h shall have not fewer than two stages of fan control.
- D. Air Filters: 2 inch thick disposable media in metal frames.
- E. Roof Mounting Curb: Galvanized steel, channel frame, insulated, with gaskets, nailer strips. Provide roof curb of adequate height to provide a unit mounting height of 12" or greater above the top of the roof surface with the curb mounted to the building structure. Roof curb height must compensate for the roof insulation thickness to meet this requirement.
- F. Vibration Isolation Curb: Only when indicated on the Drawings.

2.04 ELECTRIC HEATING COIL (PROVIDE IF INDICATED ON DESIGN DRAWINGS)
- A. Helical nickel-chrome resistance wire coil heating elements with refractory ceramic support bushings or finned tube heating elements easily accessible with automatic reset thermal cut-out, built-in magnetic contactors, galvanized steel frame, control circuit transformer and fuse, manual reset thermal cut-out, airflow proving device, load fuses.
- B. Controls: Start supply fan before electric elements are energized and continue operating until air temperature reaches minimum setting, with switch for continuous fan operation. Controls shall prevent supplemental heater operation when heating load can be met by the heat pump alone. Heater operation is permitted during outdoor coil defrost cycles.

2.05 EVAPORATOR COIL
- A. Provide copper tube aluminum fin coil assembly with galvanized drain pan and connection.
- B. Provide capillary tubes or thermostatic expansion valves for units of 6 tons capacity and less, and thermostatic expansion valves and alternate row circuiting for units 7.5 tons cooling capacity and larger.

2.06 COMPRESSOR
- A. Provide hermetic or semi-hermetic compressors, 3600 rpm maximum, resiliently mounted with positive lubrication, crankcase heater, high and low pressure safety controls, motor overload protection, suction and discharge service valves and gage ports, and filter drier.
- B. Five minute timed off circuit to delay compressor start.
- C. Outdoor thermostat to energize compressor above 35 degrees F ambient.
- D. For heat pump units, provide reversing valve, suction line accumulator, discharge muffler, flow control check valve, and solid-state defrost control utilizing thermistors.

2.07 CONDENSER COIL
- A. Provide copper tube aluminum fin coil assembly with subcooling rows and coil guard.
- B. Provide direct drive propeller fans, resiliently mounted with fan guard, motor overload protection, wired to operate with compressor.

2.08 MIXED AIR CASING
- A. Dampers: Provide outside, return, and relief dampers with damper operator and control package to automatically vary outside air quantity. Outside air damper to fall to closed position. Relief dampers may be gravity balanced.
- B. Gaskets: Provide tight fitting dampers with edge gaskets maximum leakage 5 percent at 2 inches pressure differential.
- C. Damper Operator: 24 volt with gear train sealed in oil.
- D. Damper Operator, Units 7.5 Ton Cooling Capacity and Larger: 24 volt with gear train sealed in oil with spring return on.
- E. Mixed Air Controls: Maintain selected supply air temperature and return dampers to minimum position on call for heating and above 75 degrees F ambient, or when ambient air temperature exceeds return air temperature.

2.09 INTEGRATED ECONOMIZER:
- A. Economizer shall be furnished and installed complete with outside air and relief dampers and controls.
- B. Provide low-leakage, opposed blade dampers.
  1. Meet all leakage requirements of applicable energy code.
- C. Economizer shall be capable of introducing up to 100% outdoor air for minimum ventilation as well as free cooling.
- D. Damper actuator shall be electronic, fully modulating design.
- E. Economizer outdoor hood shall be pre-painted and fully integrated with the unit.
- F. Dry Bulb Control: Provide dry bulb sensor capable of measuring temperature of outdoor air and controlling economizer cut-in point at the most economical level. High level cutoff shall be set per applicable energy code.
  1. Provide economizer Fault Detection and Diagnostics (FDD).

2.10 POWER EXHAUST:
- A. Package shall include exhaust fan(s) and damper for units with economizer to control over-pressurization of building including integral pressure controls.

2.11 WATER LEVEL MONITORING DEVICE:
- A. A water-level monitoring device shall be installed inside the primary drain pan. This device shall shut off the equipment served in the event that the primary drain becomes restricted. Devices installed in the drain line shall not be permitted.

2.12 OPERATING CONTROLS
- A. Provide low voltage, adjustable thermostat to control heater stages in sequence with delay between stages, compressor and condenser fan, and supply fan to maintain temperature setting.
  1. Include system selector switch (off-heat-auto-cool) and fan control switch (auto-on).
  2. The Mechanical Contractor shall provide all control wiring between thermostat and unit control panel and any required remote sensors.
  3. Locate thermostat in room as shown.
  4. Electric solid state microcomputer based room thermostat, located as indicated. Provide remote sensors when indicated on the Drawings.
  5. Room thermostat shall incorporate:
     - a. Automatic switching from heating to cooling.
     - b. Preferential rate control to minimize overshoot and deviation from set point.
     - c. Automatic Start Capabilities: Controls shall be capable of automatically adjusting the daily start time of the HVAC system in order to bring each space to the desired occupied temperature immediately prior to scheduled occupancy.
     - d. Set-up for four separate temperatures per day.
     - e. Instant override of set point for continuous or timed period from one hour to 31 days.
     - f. Short cycle protection.
     - g. Programming based on weekdays, Saturday and Sunday.
     - h. Switch selection features including imperial or metric display, 12 or 24 hour clock, keyboard disable, remote sensor, fan on-auto.
  6. Room thermostat display shall include:
     - a. Time of day.
     - b. Actual room temperature.
     - c. Programmed temperature.
     - d. Day of week.
     - e. System mode indication: heating, cooling, auto, off, fan auto, fan on.
     - f. Stage (heating or cooling) operation.

PART 3 EXECUTION

3.01 INSTALLATION
- A. Install in accordance with manufacturer's instructions and NFPA 90A.
- B. Mount units on factory built roof mounting curb providing watertight enclosure to protect ductwork and utility services. Install roof mounting curb level. Install roof mounting curb so that it bears on the building structure, not on top of roof deck or roofing materials. Provide restraints where required by local codes.
- C. Provide cooling condensate drain piping (and overflow piping if required) to approved location. Condensate piping shall be Schedule 40 galvanized steel pipe, Type L copper tube, or PVC. Contractor shall verify the selected material meets with the approval of all State, local authorities and utility company requirements. Verification of compliance of the selected piping material is the sole responsibility of the installing Contractor.
  1. Condensate piping located within the building shall be insulated with 1/2 inch thick glass fiber or flexible elastomeric cellular foam insulation. Only metallic piping systems will be allowed in return air plenum ceiling space.

END OF SECTION

Schnackel engineers
New York ■ Miami ■ Omaha ■ Los Angeles ■ Seattle ■ Honolulu
800-581-0963 www.schnackel.com

ktgy

17911 Von Karman Ave.
Suite 200
Irvine, CA 92614
ktgy.com
949.851.2133

ktgy Project Number

Contact DORINA WATSON
Email dwatson@ktgy.com
Senior Director DAVID SCHMITZ
Designer RUSSEL ROSALES

Developer
SEDC
23906 SOBOBA ROAD
SAN JACINTO, CA 92581

PHONE: (951) 663-2058

SOBOBA SOVOVATUM VILLAGE PHASE-2

-

SAN JACINTO, CA

No.	DATE	DESCRIPTION

Client is responsible for notifying architect in writing for any discovered errors or omissions in the plans and specifications during construction of the project. Failure for Client to notify Architect of any known errors or omissions in the plans or specifications, and proceeding with constructing the portion of work shown in the plans or specifications containing known errors or omissions shall be a waiver by Client for any liability of Architect for such known errors or omissions. Client releases Architect for any liability for such portions of work, and Architect shall not be liable for any delay damages, change orders, repair costs, removal or demolition costs, or replacement of any such portions of work.

2026-05-26, ISSUED FOR BID

Sheet Name
MECHANICAL SPECIFICATIONS

M3-11

SE JOB#: 250720

COPYRIGHT 2024 KTGY GROUP INC. These plans and specifications are protected by United States copyright law and may not be used, reproduced, distributed, transmitted, displayed, or modified in any way without the prior written consent of KTGY Group, Inc. or the authorized copyright holder or licensee.

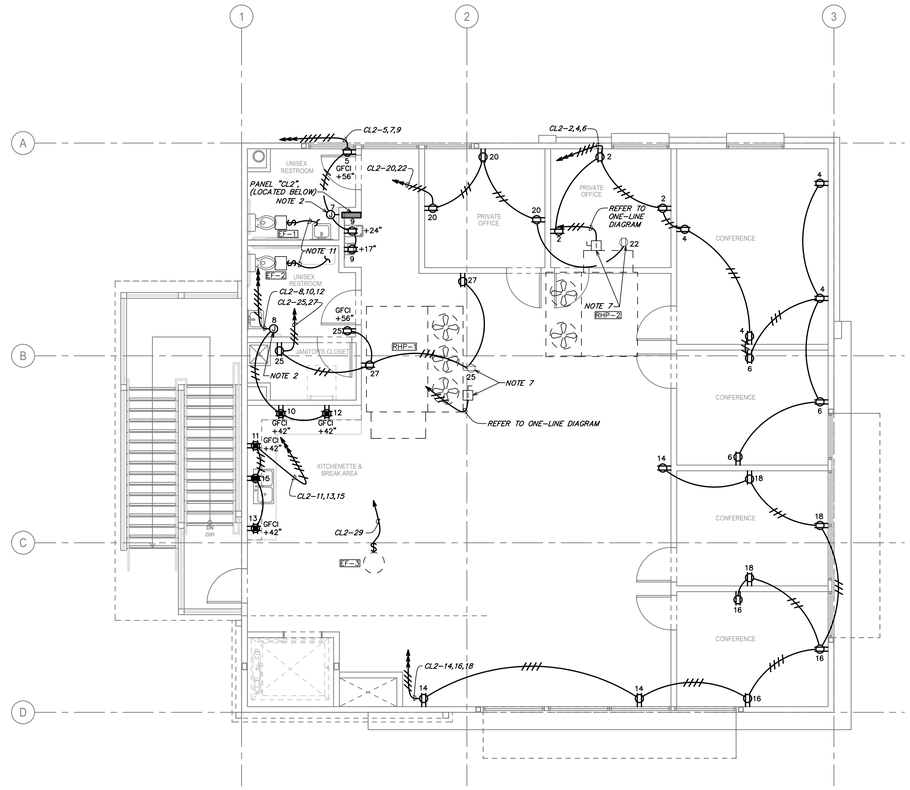

2 POWER AND SYSTEMS PLAN - SECOND FLOOR
3/16" = 1'-0"

NORTH

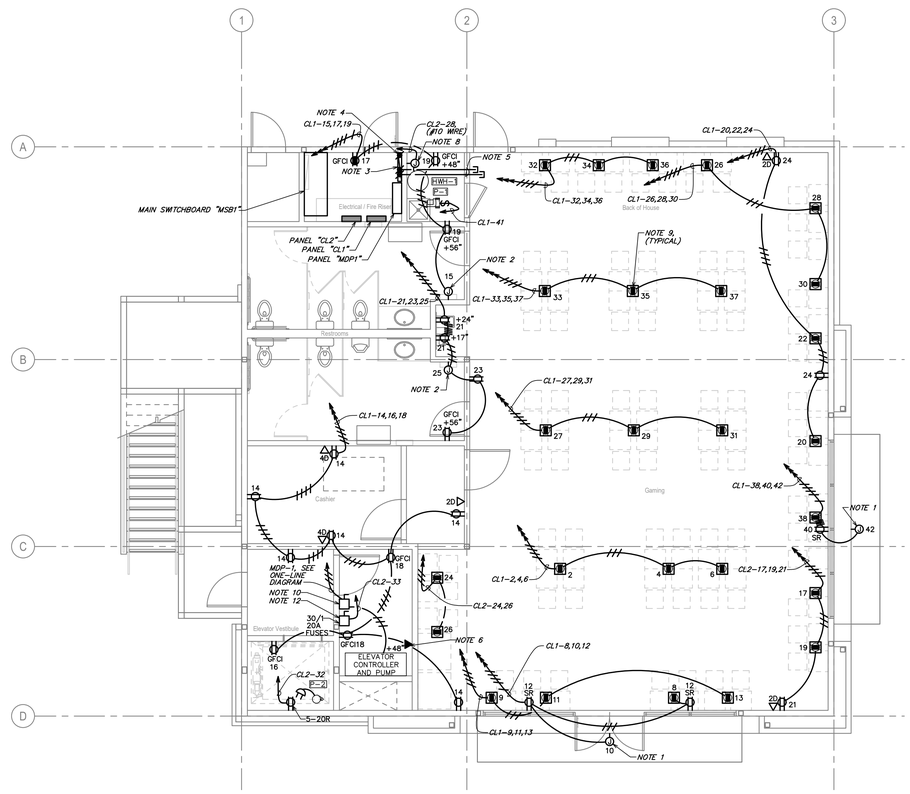

1 POWER AND SYSTEMS PLAN - FIRST FLOOR

NORTH

GENERAL ELECTRICAL NOTES:

A. WHERE THE MECHANICAL DESIGN UTILIZES A PLENUM RETURN AIR CEILING DESIGN, ALL EQUIPMENT AND MATERIALS INSTALLED WITHIN THE PLENUM RETURN CEILING MUST MEET THE FLAME SPREAD AND SMOKE DEVELOPED RATINGS OF 25/50 AND BE APPROVED FOR USE IN PLENUM RETURN CEILINGS. COORDINATE PLENUM CEILING LOCATIONS WITH THE MECHANICAL CONTRACTOR.
B. COORDINATE ALL DEVICE LOCATIONS AND CIRCUIT ROUTING WITHIN ANY MILLWORK WITH MILLWORK VENDOR PRIOR TO ROUGH-IN.
C. COORDINATE THE CONNECTIONS OF ALL EQUIPMENT PROVIDED BY OTHERS WITH THE CONTRACTOR PROVIDING THE EQUIPMENT PRIOR TO ROUGH-IN. THIS INCLUDES, BUT IS NOT LIMITED TO, MECHANICAL EQUIPMENT, KITCHEN EQUIPMENT, AUDIO/VISUAL EQUIPMENT, FIRE SUPPRESSION SYSTEM EQUIPMENT, FIRE ALARM EQUIPMENT, ETC. PROVIDE THE APPROPRIATE DISCONNECTING MEANS FOR, AND TO MAKE THE FINAL CONNECTION TO, ANY HARDWIRED EQUIPMENT. THE ELECTRICAL CONTRACTOR IS ALSO RESPONSIBLE TO PROVIDE AN APPROPRIATE CORD AND PLUG FOR ANY CORD-AND-PLUG CONNECTED EQUIPMENT THAT IS NOT EQUIPPED WITH AN INTEGRAL CORD AND PLUG.
D. SEE PANEL SCHEDULES FOR INFORMATION ON CIRCUITS THAT ARE TO BE ROUTED THROUGH CONTACTORS OR RELAYS FOR CONTROL.
E. ALL EQUIPMENT, DEVICES, AND LUMINAIRES SHALL BE SUITABLE FOR THE ENVIRONMENT IN WHICH THEY ARE INSTALLED. EQUIPMENT MOUNTED OUTDOORS SHALL BE NEMA 3R. DEVICES MOUNTED IN DAMP OR WET LOCATIONS SHALL BE WEATHERPROOF. RECEPTACLES RATED 15- OR 20-AMPS AND 120 VOLTS WHICH ARE LOCATED IN DAMP OR WET LOCATIONS SHALL BE GFCI PROTECTED AND EQUIPPED WITH A SUITABLE WEATHERPROOF COVERPLATE (WHILE-IN-USE IN WET LOCATIONS).
F. ALL LUGS, TERMINALS, ETC. IN ELECTRICAL DISTRIBUTION EQUIPMENT SHALL BE LISTED FOR A MINIMUM OF 75 DEGREE C CONDUCTORS. TERMINATIONS LISTED FOR ONLY 60 DEGREE C CONDUCTORS ARE NOT PERMITTED.
G. COORDINATE WITH ALL OTHER TRADES TO PROVIDE ALL CODE-REQUIRED CLEARANCES AROUND ELECTRICAL CONNECTION AND CONTROLS COMPARTMENTS IN ALL EQUIPMENT WHICH IS PROVIDED BY OTHERS AND CONNECTED BY THE ELECTRICAL CONTRACTOR SUCH AS, BUT NOT LIMITED TO, HVAC EQUIPMENT.
H. VERIFY ALL EQUIPMENT LOCATIONS AND REQUIREMENTS WITH ELEVATOR MANUFACTURER'S SHOP DRAWINGS PRIOR TO ROUGH-IN OR INSTALLATION OF EQUIPMENT.
I. OBTAIN THE REVIEW AND APPROVAL FROM THE LOCAL AUTHORITY HAVING JURISDICTION AND ELEVATOR MANUFACTURER OF THE ENTIRE SYSTEM OF ELEVATOR CONTROL AND POWER SUPPLY, INCLUDING THE LOCATIONS OF ALL COMPONENTS, PRIOR TO ROUGH-IN AND ORDERING OF ANY EQUIPMENT OR MATERIALS. PROMPTLY NOTIFY THE ENGINEER OF ANY ISSUE WHICH MAY IMPEDE THE INSTALLATION OF THESE SYSTEMS AS INDICATED HEREIN.

KEYED ELECTRICAL NOTES:

1. PROVIDE FINAL CONNECTION TO SIGNAGE. COORDINATE LOCATION AND ALL REQUIREMENTS WITH SIGN CONTRACTOR PRIOR TO ROUGH-IN. PROVIDE AN APPROPRIATE LOCAL DISCONNECTING MEANS MOUNTED IN AN ACCESSIBLE, INCONSPICUOUS LOCATION THAT IS WITHIN SIGHT OF THE SIGN. EACH SIGN CIRCUIT SHALL HAVE A SEPARATE NEUTRAL CONDUCTOR.
2. PROVIDE FINAL CONNECTION TO HAND DRYER. COORDINATE MOUNTING HEIGHT WITH ARCHITECT AND ALL REQUIREMENTS WITH EQUIPMENT MANUFACTURER PRIOR TO ROUGH-IN.
3. PROVIDE A 2'-6" x 8'-0" x 3/4" UL-LABELED FIRE-RETARDANT PLYWOOD BACKBOARD FOR TELECOMMUNICATIONS EQUIPMENT. PROVIDE GROUND BAR MOUNTED ON BACKBOARD WITH EQUIPMENT GROUNDING CONDUCTOR CONNECTED TO POWER SYSTEM'S GROUNDING ELECTRODE SYSTEM. SEE DETAIL 4/E3 FOR ADDITIONAL INFORMATION REGARDING GROUND BAR.
4. PROVIDE ONE 4" EMT CONDUIT WITH PULL STRING FROM EXISTING GAS STATION TELECOMMUNICATIONS ROOM.
5. PROVIDE TWO 4" CONDUIT SLEEVES FROM ELECTRICAL ROOM TO UNDER RAISED FLOOR FOR FUTURE ROUTING OF FIBER AND COPPER DATA LINES.
6. PROVIDE AN OUTLET FOR EMERGENCY TWO-WAY COMMUNICATION SYSTEM AND INTERLOCK WITH THE ELEVATOR CAR COMMUNICATIONS SYSTEM AND THE FACILITY'S TELECOMMUNICATIONS SYSTEM. COORDINATE INSTALLATION LOCATION AND ALL REQUIREMENTS WITH THE ELEVATOR CONTRACTOR PRIOR TO ROUGH-IN.
7. DISCONNECT SWITCH AND WEATHERPROOF GFCI SERVICE RECEPTACLE ARE PROVIDED BY EQUIPMENT MANUFACTURER, INTEGRAL WITH EQUIPMENT. PROVIDE CIRCUITS AND FINAL CONNECTIONS AS INDICATED.
8. PROVIDE FINAL CONNECTION TO WATER HEATER. THE REQUIRED DISCONNECTING MEANS SHALL CONSIST OF PADLOCK ACCESSORY ON CIRCUIT BREAKER SERVING WATER HEATER BRANCH CIRCUIT TO LOCK CIRCUIT BREAKER IN OPEN (OFF) POSITION. COORDINATE ALL REQUIREMENTS WITH PLUMBING CONTRACTOR PRIOR TO ROUGH-IN.
9. PROVIDE FLOOR MOUNTED RECEPTACLE WITHIN RAISED FLOOR.
10. PROVIDE A BUSSMANN QUIK-SPEC POWER MODULE SWITCH, OR EQUAL, SHUNT-TRIP FUSIBLE SWITCH WITH A THREE-POLE, DOUBLE THROW FIRE SAFETY INTERFACE RELAY WITH 120 VOLT COIL (CODE R1), KEYED TEST SWITCH (CODE K), RED PILOT LIGHT ON (CODE R), TWO NORMALLY OPEN/NORMALLY CLOSED AUXILIARY CONTACTS WITH SURGE PROTECTION (CODE D), AND THREE-POLE FIRE ALARM VOLTAGE MONITORING RELAY TO MONITOR SHUNT TRIP VOLTAGE (CODE F3). SEE THE ONE-LINE DIAGRAM FOR ELECTRICAL RATINGS. COORDINATE INSTALLATION LOCATION AND ALL REQUIREMENTS WITH THE ELEVATOR CONTRACTOR PRIOR TO ROUGH-IN. INTERLOCK AUXILIARY CONTACTS WITH THE ELEVATOR'S SELF-LOWERING ACCESSORY, IF EQUIPPED, WITH HEAT DETECTOR(S) INTENDED TO ACTIVATE SHUNT-TRIP, WITH THE FIRE ALARM SYSTEM, AND WITH THE ELEVATOR'S CONTROL SYSTEM AS REQUIRED FOR A COMPLETE INSTALLATION.
11. CONNECT EXHAUST FAN TO OCCUPANCY SENSOR CONTROLLED CIRCUIT SERVING THE LIGHTING WITHIN THIS ROOM.
12. PROVIDE AN EXTERNALLY OPERABLE FUSED SAFETY SWITCH THAT IS LOCKABLE IN THE OPEN (OFF) POSITION FOR ELEVATOR CAR LIGHTING AND VENTILATION. COORDINATE INSTALLATION LOCATION AND ALL REQUIREMENTS WITH THE ELEVATOR CONTRACTOR PRIOR TO ROUGH-IN.

ktgy

17911 Von Karman Ave.
Suite 200
Irvine, CA 92614
ktgy.com
949.851.2133

ktgy Project Number

Contact	DORINA WATSON
Email	dwatson@ktgy.com
Senior Director	DAVID SCHMITZ
Designer	RUSSEL ROSALES

Developer
SEDC
23906 SOBOBA ROAD
SAN JACINTO, CA 92581

PHONE: (951) 663-2058

SOBOBA SOVOVATUM VILLAGE PHASE-2

SAN JACINTO, CA

No.	DATE	DESCRIPTION

Client is responsible for notifying architect in writing for any discovered errors or omissions in the plans and specifications during construction of the project. Failure for Client to notify Architect of any known errors or omissions in the plans or specifications, and proceeding with constructing the portion of work shown in the plans or specifications containing known errors or omissions shall be a waiver by Client for any liability of Architect for such known errors or omissions. Client releases Architect for any liability for such portions of work, and Architect shall not be liable for any delay damages, change orders, repair costs, removal or demolition costs, or replacement of any such portions of work.

2026-05-26, ISSUED FOR BID

Sheet Name
POWER AND SYSTEMS PLAN

E1-11

Schnackel engineers
Electrical Engineers • Mechanical Engineers • Civil Engineers • Structural Engineers
800-381-8963 www.schnackel.com

SE JOB#: 250720

COPYRIGHT 2024 KTGY GROUP INC. These plans and specifications are protected by United States copyright law and may not be used, reproduced, distributed, transmitted, displayed, or modified in any way without the prior written consent of KTGY Group, Inc. or the authorized copyright holder or licensee.

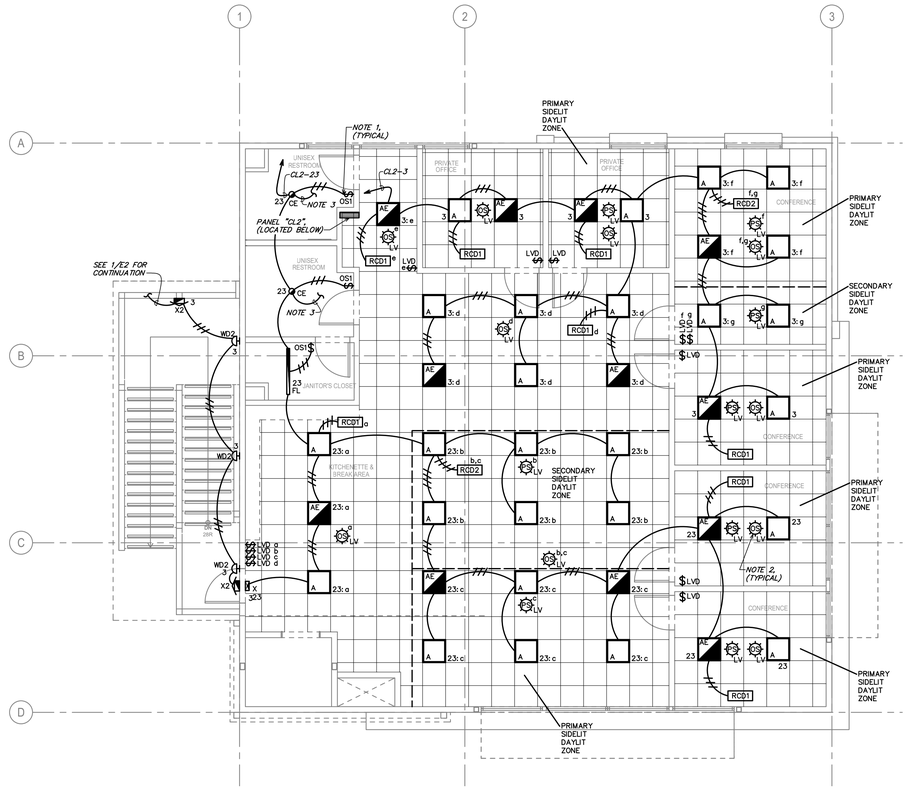

2 LIGHTING PLAN - SECOND FLOOR
3/16" = 1'-0"

NORTH

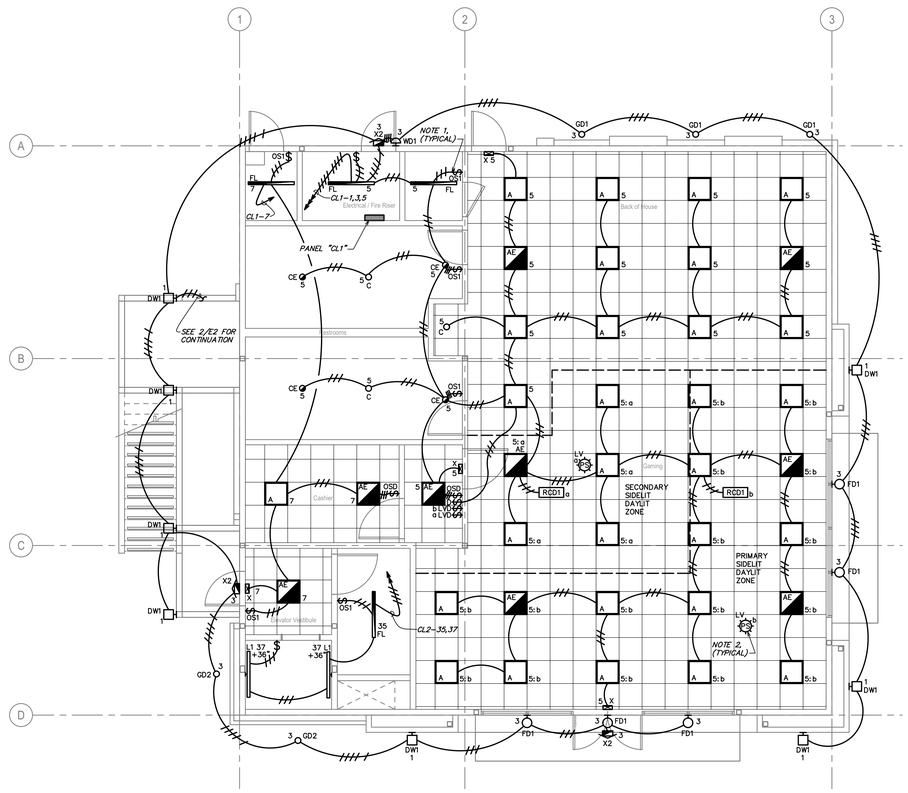

1 LIGHTING PLAN - FIRST FLOOR

NORTH

GENERAL ELECTRICAL NOTES:

A. WHERE THE MECHANICAL DESIGN UTILIZES A PLENUM RETURN AIR CEILING DESIGN, ALL EQUIPMENT AND MATERIALS INSTALLED WITHIN THE PLENUM RETURN CEILING MUST MEET THE FLAME SPREAD AND SMOKE DEVELOPED RATINGS OF 25/50 AND BE APPROVED FOR USE IN PLENUM RETURN CEILINGS. COORDINATE PLENUM CEILING LOCATIONS WITH THE MECHANICAL CONTRACTOR. LUMINAIRES THAT ARE MANUFACTURED WITH A METAL HOUSING MEET THIS REQUIREMENT AND ARE NOT REQUIRED TO BE PLENUM RATED UNLESS INDICATED OTHERWISE.

B. COORDINATE ALL DEVICE LOCATIONS AND CIRCUIT ROUTING WITHIN ANY MILLWORK WITH MILLWORK VENDOR PRIOR TO ROUGH-IN.

C. COORDINATE THE CONNECTIONS OF ALL EQUIPMENT PROVIDED BY OTHERS WITH THE CONTRACTOR PROVIDING THE EQUIPMENT PRIOR TO ROUGH-IN. THIS INCLUDES, BUT IS NOT LIMITED TO, MECHANICAL EQUIPMENT, KITCHEN EQUIPMENT, AUDIO/VISUAL EQUIPMENT, FIRE SUPPRESSION SYSTEM EQUIPMENT, FIRE ALARM EQUIPMENT, ETC. PROVIDE THE APPROPRIATE DISCONNECTING MEANS FOR, AND TO MAKE THE FINAL CONNECTION TO, ANY HARDWIRED EQUIPMENT. THE ELECTRICAL CONTRACTOR IS ALSO RESPONSIBLE TO PROVIDE AN APPROPRIATE CORD AND PLUG FOR ANY CORD-AND-PLUG CONNECTED EQUIPMENT THAT IS NOT EQUIPPED WITH AN INTEGRAL CORD AND PLUG.

D. SEE PANEL SCHEDULES FOR INFORMATION ON CIRCUITS THAT ARE TO BE ROUTED THROUGH CONTACTORS OR RELAYS FOR CONTROL.

E. ALL EQUIPMENT, DEVICES, AND LUMINAIRES SHALL BE SUITABLE FOR THE ENVIRONMENT IN WHICH THEY ARE INSTALLED. EQUIPMENT MOUNTED OUTDOORS SHALL BE NEMA 3R. DEVICES MOUNTED IN DAMP OR WET LOCATIONS SHALL BE WEATHERPROOF. RECEPTACLES RATED 15- OR 20-AMPS AND 120 VOLTS WHICH ARE LOCATED IN DAMP OR WET LOCATIONS SHALL BE GFCI PROTECTED AND EQUIPPED WITH A SUITABLE WEATHERPROOF COVERPLATE (WHILE-IN-USE IN WET LOCATIONS).

F. ALL LUGS, TERMINALS, ETC. IN ELECTRICAL DISTRIBUTION EQUIPMENT SHALL BE LISTED FOR A MINIMUM OF 75 DEGREE C CONDUCTORS. TERMINATIONS LISTED FOR ONLY 60 DEGREE C CONDUCTORS ARE NOT PERMITTED.

G. COORDINATE WITH ALL OTHER TRADES TO PROVIDE ALL CODE-REQUIRED CLEARANCES AROUND ELECTRICAL CONNECTION AND CONTROLS COMPARTMENTS IN ALL EQUIPMENT WHICH IS PROVIDED BY OTHERS AND CONNECTED BY THE ELECTRICAL CONTRACTOR SUCH AS, BUT NOT LIMITED TO, HVAC EQUIPMENT.

H. CIRCUITS SERVING EMERGENCY LIGHTING EQUIPMENT SUCH AS EMERGENCY BATTERIES SHALL NOT SHARE A NEUTRAL (SHALL NOT BE PART OF A MULTIWIRE BRANCH CIRCUIT) WITH ANY OTHER CIRCUIT. PROVIDE A SEPARATE NEUTRAL FOR EVERY CIRCUIT THAT SERVES EMERGENCY LIGHTING EQUIPMENT.

I. ALTHOUGH NOT SPECIFICALLY SHOWN, THE ELECTRICAL CONTRACTOR SHALL PROVIDE ALL REQUIRED LOW VOLTAGE WIRING AND DATA CABLING, PER THE MANUFACTURER'S RECOMMENDATIONS, FOR A COMPLETE, FUNCTIONAL LIGHTING CONTROL SYSTEM.

J. ALTHOUGH NOT SPECIFICALLY SHOWN, THE ELECTRICAL CONTRACTOR SHALL PROVIDE ALL REQUIRED WIRING AND DATA CABLING, INCLUDING ALL 0-10V CONTROL WIRING WHERE APPLICABLE, PER THE MANUFACTURER'S RECOMMENDATIONS FOR A COMPLETE, FUNCTIONAL DIMMING SYSTEM.

KEYED ELECTRICAL NOTES:

1. SEE DETAIL 3/E3 FOR ADDITIONAL INFORMATION REGARDING WALL MOUNTED OCCUPANCY SENSOR CONTROL OF LIGHTING IN THIS ROOM.
2. SEE DETAIL 5/E3 FOR ADDITIONAL INFORMATION REGARDING CEILING MOUNTED OCCUPANCY SENSOR AND/OR PHOTO SENSOR CONTROL OF LIGHTING IN THIS ROOM.
3. CONNECT TO EXHAUST FAN SERVING THIS ROOM. REFER TO SHEET E1 FOR ADDITIONAL INFORMATION.

ktgy

17911 Von Karman Ave.
Suite 200
Irvine, CA 92614
ktgy.com
949.851.2133

ktgy Project Number

Contact	DORINA WATSON
Email	dwatson@ktgy.com
Senior Director	DAVID SCHMITZ
Designer	RUSSEL ROSALES

Developer
SEDC
23906 SOBOBA ROAD
SAN JACINTO, CA 92581

PHONE: (951) 663-2058

SOBOBA SOVOVATUM VILLAGE PHASE-2

SAN JACINTO, CA

No.	DATE	DESCRIPTION

Client is responsible for notifying architect in writing for any discovered errors or omissions in the plans and specifications during construction of the project. Failure for Client to notify Architect of any known errors or omissions in the plans or specifications, and proceeding with constructing the portion of work shown in the plans or specifications containing known errors or omissions shall be a waiver by Client for any liability of Architect for such known errors or omissions. Client releases Architect for any liability for such portions of work, and Architect shall not be liable for any delay damages, change orders, repair costs, removal or demolition costs, or replacement of any such portions of work.

2026-05-26, ISSUED FOR BID

Sheet Name
LIGHTING PLANS

E1-12

Schnackel engineers
800-381-8963 www.schnackel.com

COPYRIGHT 2024 KTGY GROUP INC. These plans and specifications are protected by United States copyright law and may not be used, reproduced, distributed, transmitted, displayed, or modified in any way without the prior written consent of KTGY Group, Inc. or the authorized copyright holder or licensee.

SE JOB#: 250720

LUMINAIRE SCHEDULE									
MARK	MANUFACTURER	CATALOG NUMBER	VOLTAGE	WATTS	MOUNTING	LIGHT SOURCE	DIMMING	SPECIFIER	REMARKS
A	LITHONIA	2FSL2–40L–GZ1–LP835	120	34	CEILING, RECESSED	INTEGRATED LED	0–10V	ENGINEER	
AE	LITHONIA	2FSL2–40L–GZ1–LP835–E10W	120	34	CEILING, RECESSED	INTEGRATED LED	0–10V	ENGINEER	
C	LITHONIA	LDN6–35/10–LO6–AR–LSS–TRW–MVOLT–GZ1	120	10	CEILING, RECESSED	INTEGRATED LED	0–10V	ENGINEER	
CE	LITHONIA	LDN6–35/10–LO6–AR–LSS–TRW–MVOLT–GZ1–E10WCP	120	10	CEILING, RECESSED	INTEGRATED LED	0–10V	ENGINEER	
DW1	ALVA LIGHTING	BRIAN–46–3000–MT2–DBT	120	20	WALL, SURFACE	INTEGRATED LED	0–10V	OTHERS	
FD1	WAC LIGHTING	DS–WS05–F930S–BZ	120	25	WALL, SURFACE	INTEGRATED LED	0–10V	OTHERS	
FL	LITHONIA	ZL1N–L48–5000LM–FST–MVOLT–35K–80CRI–E10W–WH	120	34	CEILING, SURFACE	INTEGRATED LED	0–10V	ENGINEER	
GD1	TARGETTI	KPLM–41–HE–FL–L2–30 / 1DU2525A / 1DU2521 / 1DU2530 / 1E2523	120	14	GRADE, RECESSED	INTEGRATED LED	0–10V	OTHERS	
GD2	TARGETTI	KPLM–41–WW–L1–30 / 1DU2525A / 1DU2521 / 1DU2530	120	14	GRADE, RECESSED	INTEGRATED LED	0–10V	OTHERS	
L1	LITHONIA	FEM–L48–4000LM–LPPFL–MD–MVOLT–GZ10–59K–80CRI	120	24	WALL, SURFACE	INTEGRATED LED	0–10V	ENGINEER	
WD2	WAC LIGHTING	WS–W2610–BZ	120	30	WALL, SURFACE	INTEGRATED LED	0–10V	OTHERS	
X	LITHONIA	EDG–W–1–G–EL	120	3	WALL, SURFACE	INTEGRATED LED	NON	ENGINEER	
X2	COOPER LIGHTING	SELDWA50BZSD	120	8	WALL, SURFACE	INTEGRATED LED	NON	ENGINEER	

LUMINAIRE SCHEDULE GENERAL NOTES:

A. LUMINAIRE SYMBOLS THAT ARE SHOWN HALF–SHADED, OR LABELED "EM", ON THE PLAN(S) INDICATE LUMINAIRES THAT SERVE AS EMERGENCY LIGHTING. UNLESS SERVED BY A CIRCUIT ORIGINATING AT AN EMERGENCY PANELBOARD OR CENTRAL LIGHTING INVERTER, EMERGENCY LIGHTING LUMINAIRES SHALL BE PROVIDED WITH AN EMERGENCY BATTERY. SEE THE SPECIFICATIONS FOR MINIMUM EMERGENCY BATTERY PERFORMANCE REQUIREMENTS.
B. PROPOSED SUBSTITUTIONS FOR LUMINAIRES THAT ARE SELECTED BY OTHERS REQUIRE THE APPROVAL OF THE INDIVIDUAL THAT SELECTED THE LUMINAIRE.
C. COORDINATE ALL DIMMING CONTROL DIMMING METHODS WITH THE DIMMING METHODS INDICATED ON THIS SCHEDULE.

SYMBOL MODIFIERS (INCLUDING COMBINATIONS), ACRONYMS, AND ABBREVIATONS

GENERAL SYMBOL MODIFIERS (APPLY TO ALL)
- +XX" MOUNTING HEIGHT TO CENTER OF BOX (OVERRIDES DEFAULT MOUNTING HEIGHT)
- ACH ABOVE COUNTERTOP/BACKSPLASH, SEE ARCHITECTURAL ELEVATIONS
- EM EMERGENCY
- EX EXISTING TO REMAIN
- GFCI GROUND–FAULT CIRCUIT INTERRUPTER (4 TO 6 MILLIAMP TRIP)
- H HORIZONTAL MOUNT
- PT POKE–THROUGH
- RERN REMOVE EXISTING AND REPLACE WITH NEW
- RR REMOVE AND RELOCATE/ REMOVED AND RELOCATED
- WP WEATHERPROOF
- ##:XX CIRCUIT NUMBER:CONTROL ZONE

RECEPTACLE MODIFIERS
- CH CLOCK HANGER
- CR CONTROLLED
- HG HOSPITAL GRADE
- IG ISOLATED GROUND
- MFR PROVIDED BY EQUIPMENT MANUFACTURER INTEGRAL WITH THE EQUIPMENT
- SP SURGE PROTECTION
- SR SHOW WINDOW. MOUNTED WITHIN 18 INCHES OF TOP OF SHOW WINDOW
- TR TAMPER–RESISTANT
- USB DEVICE WITH USB PORT(S)

SWITCHES AND CONTROLS MODIFIERS
- 2 DPST
- 3 THREE–WAY
- 4 FOUR–WAY
- a,b,c... CONTROL AND LOAD ASSOCIATION
- D DIMMER
- DTC SPDT, CENTER OFF, MAINTAINED CONTACT
- DTM SPDT, CENTER OFF, MOMENTARY CONTACT
- F BOX COVER UNIT, BUSSMANN SSU SERIES
- G GLOW HANDLE (HANDLE GLOWS WHEN SWITCH IS OFF)
- K KEY OPERATED
- LV LOW VOLTAGE
- LVD LOW VOLTAGE DIMMER
- M MANUAL MOTOR CONTROLLER WITH OVERLOAD HEATER
- OR OVERRIDE WITH TIMER
- OS1 SINGLE–RELAY OCCUPANCY SENSOR
- OS2 DUAL–RELAY OCCUPANCY SENSOR
- OSD DIMMING OCCUPANCY SENSOR
- P PILOT LIGHT (PILOT ON WHEN SWITCH IS ON)
- SB SWITCH BANK (GANGED SWITCHES)
- T TIMER

GENERAL ACRONYMS AND ABBREVIATIONS
- AHJ AUTHORITY HAVING JURISDICTION
- ATS AUTOMATIC TRANSFER SWITCH
- AFF ABOVE FINISHED FLOOR
- AFG ABOVE FINISHED GRADE
- DPNL DISTRIBUTION (POWER) PANELBOARD
- EGC EQUIPMENT GROUNDING CONDUCTOR
- ERMS ARC ENERGY REDUCING MAINTENANCE SWITCH
- FTL FEED–THROUGH LUGS (SUBFEED LUGS ARE ALSO ACCEPTABLE)
- GEC GROUNDING ELECTRODE CONDUCTOR
- GFPE GROUND–FAULT PROTECTION OF EQUIPMENT
- GND GROUND
- MCC MOTOR CONTROL CENTER
- MTS MANUAL TRANSFER SWITCH
- N.F. NON–FUSED
- NEC NATIONAL ELECTRICAL CODE (NFPA 70)
- NIC NOT IN CONTRACT
- NL NIGHTLIGHT
- PNL PANELBOARD
- SSBJ SUPPLY–SIDE BONDING JUMPER
- ST SHUNT TRIP
- SWBD SWITCHBOARD
- UNO UNLESS NOTED OTHERWISE
- XFMR TRANSFORMER
- SPST SINGLE POLE, SINGLE THROW
- DPST DOUBLE POLE, SINGLE THROW
- 3PST THREE POLE, SINGLE THROW
- 4PST FOUR POLE, SINGLE THROW
- SPDT SINGLE POLE, DOUBLE THROW
- DPDT DOUBLE POLE, DOUBLE THROW
- 3PDT THREE POLE, DOUBLE THROW
- 4PDT FOUR POLE, DOUBLE THROW
- NO NORMALLY OPEN
- NC NORMALLY CLOSED

ELECTRICAL SYMBOL LEGEND (SOME MAY NOT BE USED)

	SYMBOL	DESCRIPTION	SYMBOL	DESCRIPTION
RECEPTACLES AND PLUGS		WALL MOUNTED SINGLE RECEPTACLE, NEMA 5–20R		FLUSH FLOOR MOUNTED SINGLE RECEPTACLE, NEMA 5–20R
		WALL MOUNTED DUPLEX RECEPTACLE		FLUSH FLOOR MOUNTED DUPLEX RECEPTACLE
		WALL MOUNTED DEDICATED DUPLEX RECEPTACLE		FLUSH FLOOR MOUNTED DEDICATED DUPLEX RECEPTACLE
		WALL MOUNTED DUPLEX RECEPTACLE, ONE RECEPTACLE SWITCHED OR SPLIT–WIRED		FLUSH FLOOR MOUNTED DUPLEX RECEPTACLE, SPLIT–WIRED
		WALL MOUNTED QUADRUPLEX RECEPTACLE		FLUSH FLOOR MOUNTED QUADRUPLEX RECEPTACLE
		WALL MOUNTED DEDICATED QUADRUPLEX RECEPTACLE		FLUSH FLOOR MOUNTED DEDICATED QUADRUPLEX RECEPTACLE
		WALL MOUNTED QUADRUPLEX RECEPTACLE, SPLIT–WIRED		FLUSH FLOOR MOUNTED QUADRUPLEX RECEPTACLE, SPLIT–WIRED
		WALL MOUNTED SPECIAL RECEPTACLE, NEMA CONFIGURATION AS NOTED		FLUSH FLOOR MOUNTED SPECIAL RECEPTACLE, NEMA CONFIGURATION AS NOTED
		WALL MOUNTED RANGE RECEPTACLE, NEMA 14–50R UNLESS INDICATED OTHERWISE		ABOVE FLOOR SERVICE FITTING, HUBBELL #SC3098A OR EQUAL; NEMA CONFIGURATION AS NOTED
	C	CEILING MOUNTED SINGLE RECEPTACLE, NEMA 5–20R (C=FLUSH CEILING, DC=DROPCORD)	C	CEILING MOUNTED QUADRUPLEX RECEPTACLE (C=FLUSH CEILING, DC=DROPCORD)
	C	CEILING MOUNTED DUPLEX RECEPTACLE (C=FLUSH CEILING, DC=DROPCORD)	C	CEILING MOUNTED DEDICATED QUADRUPLEX RECEPTACLE (C=FLUSH CEILING, DC=DROPCORD)
	C	CEILING MOUNTED DEDICATED DUPLEX RECEPTACLE (C=FLUSH CEILING, DC=DROPCORD)	C	CEILING MOUNTED QUADRUPLEX RECEPTACLE, SPLIT–WIRED (C=FLUSH CEILING, DC=DROPCORD)
	C	CEILING MOUNTED DUPLEX RECEPTACLE, SPLIT–WIRED (C=FLUSH CEILING, DC=DROPCORD)	C	CEILING MOUNTED SPECIAL RECEPTACLE, NEMA CONFIGURATION AS NOTED (C=FLUSH CEILING, DC=DROPCORD)
		MULTI–OUTLET ASSEMBLY		CORD AND PLUG
BOXES		WALL MOUNTED JUNCTION/OUTLET BOX	C	CEILING MOUNTED JUNCTION/OUTLET BOX
		FLUSH FLOOR MOUNTED JUNCTION/OUTLET BOX		JUNCTION BOX MOUNTED ABOVE CEILING
SWITCHES AND CONTROLS	$	SWITCH, SPST UNLESS INDICATED OTHERWISE, HORSEPOWER RATED WHEN USED IN CONJUNCTION WITH MOTORS		PUSHBUTTON STATION, ONE BUTTON
	OS	CEILING MOUNTED OCCUPANCY SENSOR		PUSHBUTTON STATION, TWO BUTTON
	OS	WALL MOUNTED OCCUPANCY SENSOR		PUSHBUTTON STATION, THREE BUTTON
	PS	CEILING MOUNTED PHOTOSENSOR		SAFETY SWITCH, CHARACTERISTICS AS INDICATED
	MS	CEILING MOUNTED MOTION SENSOR	I	DISCONNECT SWITCH PROVIDED BY EQUIPMENT MANUFACTURER INTEGRAL WITH EQUIPMENT
	TC	AUTOMATIC TIMECLOCK	CB	ENCLOSED CIRCUIT BREAKER, CHARACTERISTICS AS INDICATED
	PC	PHOTOCELL		MAGNETIC MOTOR STARTER
	R	RELAY		COMBINATION MAGNETIC MOTOR STARTER AND DISCONNECT SWITCH, CHARACTERISTICS AS INDICATED
	C	CONTACTOR	VFD	VARIABLE FREQUENCY DRIVE
	ALCR	UL 924 AUTOMATIC LOAD CONTROL RELAY	IVFD	VARIABLE FREQUENCY DRIVE PROVIDED BY EQUIPMENT MANUFACTURER INTEGRAL WITH EQUIPMENT
	GTD	UL 1008 BRANCH CIRCUIT EMERGENCY LIGHTING TRANSFER SWITCH		
SIGNAL	B	BELL	B	CHIME
	B	BUZZER		ROTATING BEACON
TELECOMMUNICATIONS		WALL MOUNTED TELEPHONE OUTLET; *P DENOTES NUMBER OF TELEPHONE PORTS		WALL MOUNTED DATA OUTLET; *D DENOTES NUMBER OF DATA PORTS
		FLUSH FLOOR MOUNTED TELEPHONE OUTLET; *P DENOTES NUMBER OF TELEPHONE PORTS		FLUSH FLOOR MOUNTED DATA OUTLET; *D DENOTES NUMBER OF DATA PORTS
	C	CEILING MOUNTED TELEPHONE OUTLET; *P DENOTES NUMBER OF TELEPHONE PORTS	C	CEILING MOUNTED DATA OUTLET; *D DENOTES NUMBER OF DATA PORTS
		WALL MOUNTED COMBINATION TELEPHONE AND DATA OUTLET; *P/*D DENOTES NUMBER OF TELEPHONE/DATA PORTS		FLUSH FLOOR MOUNTED COMBINATION TELEPHONE AND DATA OUTLET; *P/*D DENOTES NUMBER OF TELEPHONE/DATA PORTS
	WAP	WIRELESS ACCESS POINT	C	CEILING MOUNTED COMBINATION TELEPHONE AND DATA OUTLET; *P/*D DENOTES NUMBER OF TELEPHONE/DATA PORTS
RACEWAYS AND CIRCUITRY		CIRCUITRY, CONCEALED IN WALL OR CEILING	P	POWER POLE
		CIRCUITRY, CONCEALED IN OR UNDER FLOOR	T	TELECOMMUNICATIONS POLE
		CIRCUITRY, EXPOSED	TP	TWO–CHANNEL TELECOMMUNCATIONS AND POWER POLE
		CIRCUIT HOMERUN. THE NUMBER OF ARROWS INDICATES THE NUMBER OF CIRCUITS. TWO WIRES UNLESS NOTED OTHERWISE; SLASHES INDICATE NUMBER OF WIRES. EQUIPMENT GROUND WIRE IS REQUIRED BUT NOT INDICATED. A 7 INDICATES ISOLATED GROUND CONDUCTOR.	---UCP---	UNDERCARPET FLAT CONDUCTOR CABLE WIRING SYSTEM, POWER
			---UCT---	UNDERCARPET FLAT CONDUCTOR CABLE WIRING SYSTEM, TELEPHONE
			---UCD---	UNDERCARPET FLAT CONDUCTOR CABLE WIRING SYSTEM, DATA
		CONDUIT STUB		WIRE LOOP FOR FUTURE CONNECTION, 10'–0" MINIMUM SLACK
		CONDUIT/CIRCUIT BREAK AND CONTINUED ELSEWHERE		VERTICAL CONDUIT/CIRCUIT
MISCELLANEOUS		METER AND SOCKET	M	MOTOR
		LIGHTING AND APPLIANCE PANELBOARD, SURFACE MOUNTED	XX RPS	REMOTE LIGHTING POWER SUPPLY/TRANSFORMER; (XX = WATT RATING)
		LIGHTING AND APPLIANCE PANELBOARD, FLUSH MOUNTED	XX	TRACK LIGHTING END FEED; (XX = CURRENT LIMITER RATING, IF APPLICABLE)
		OTHER EQUIPMENT AS NOTED	GFCI	CLASS A (4–6 mA TRIP) GFCI DEVICE; VOLTAGE, PHASE, AND CURRENT RATING AS REQUIRED FOR THE LOAD
	TR	LOW VOLTAGE CONTROL TRANSFORMER	SPGFCI	SPECIAL PURPOSE GFCI DEVICE; VOLTAGE, PHASE, AND CURRENT RATING AS REQUIRED FOR THE LOAD

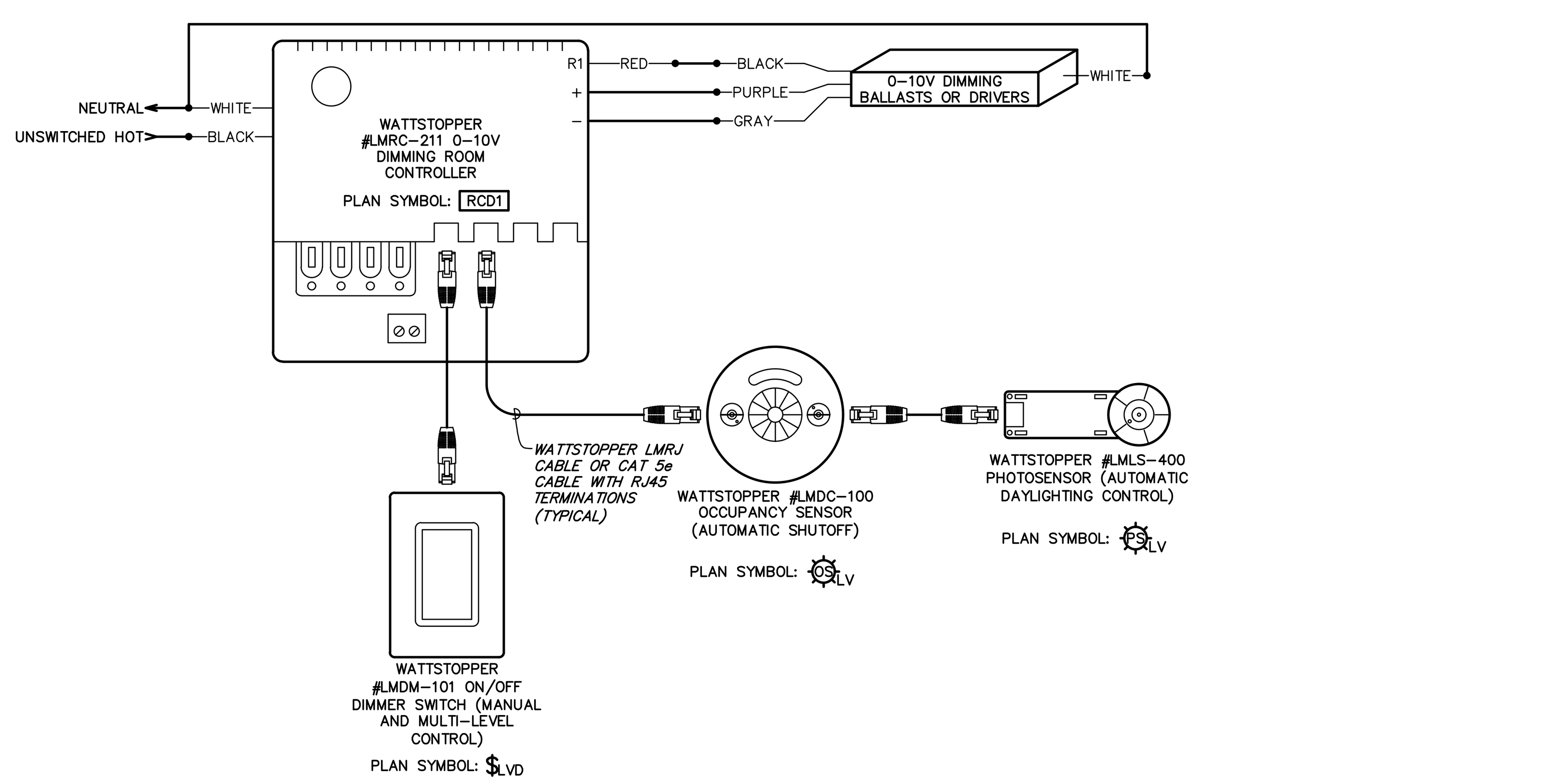

0–10V CONTINUOUS DIMMING, ONE SWITCH LEG

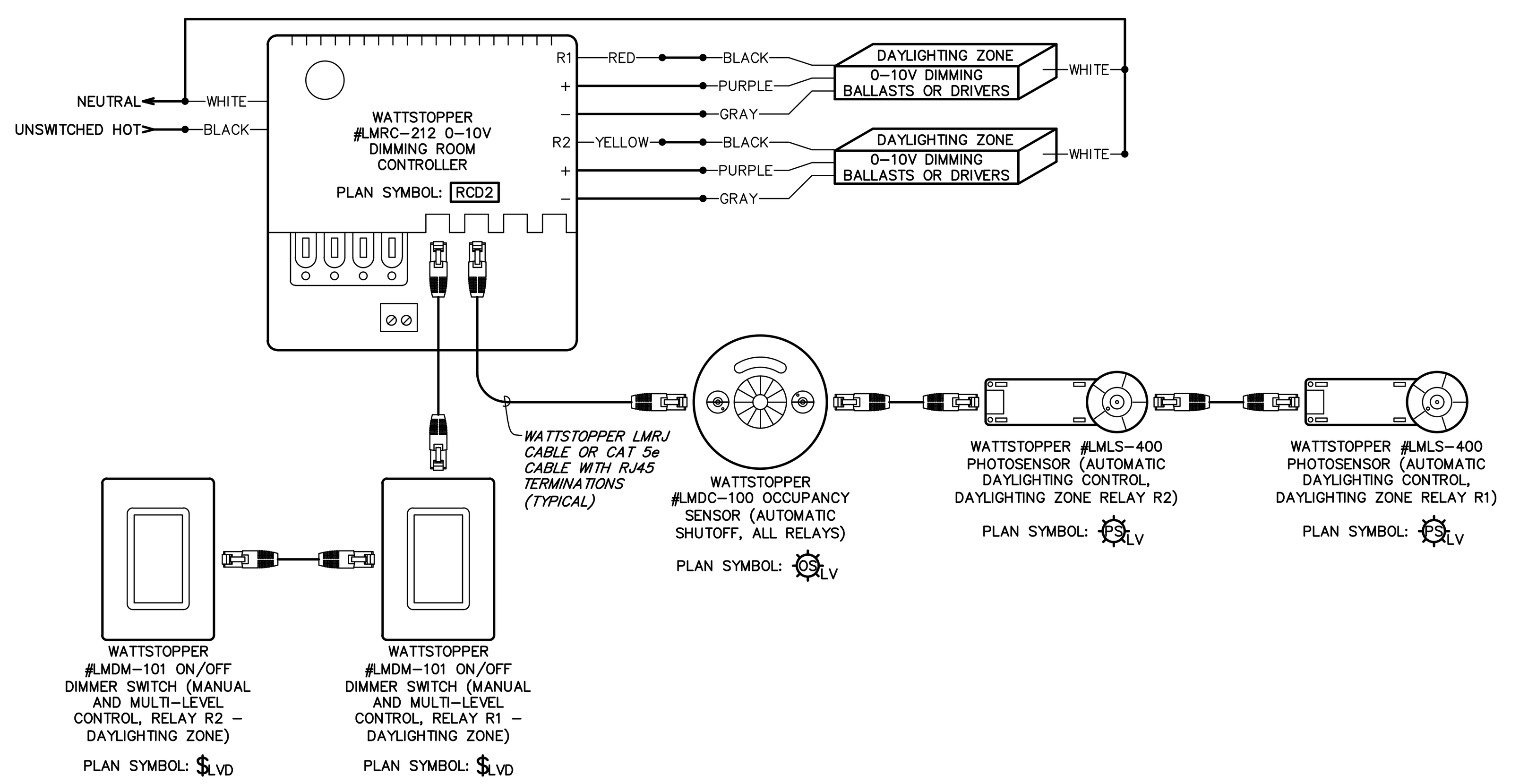

0–10V CONTINUOUS DIMMING, TWO SWITCH LEGS

GENERAL NOTES APPLICABLE TO THIS DETAIL:
A. THESE DETAILS ARE INTENDED TO ONLY PORTRAY GENERAL REQUIREMENTS FOR THE LOW VOLTAGE LIGHTING CONTROL SYSTEM AND MAY NOT BE COMPLETELY INDICATIVE OF EVERY SPECIFIC APPLICATION FOR THIS PROJECT. THE CONTRACTOR IS RESPONSIBLE TO PROVIDE ALL SWITCHES, SENSORS, ETC. AS INDICATED ON THE PLANS AND WIRE CONNECT THE COMPLETE LIGHTING CONTROL SYSTEM AS INDICATED WITHIN THESE DETAILS.
B. ANY LINE VOLTAGE (120 OR 277V) SWITCHING (LOCAL SWITCHES, RELAYS, OR CONTACTORS) INDICATED ON THE PLANS SHALL BE ON THE LOAD SIDE (OUTPUT) OF THE ROOM CONTROLLERS TO PREVENT THE ROOM CONTROLLERS FROM RESETTING TO FACTORY SETTINGS. SWITCHING THE POWER ON THE LINE SIDE (INPUT) OF THE ROOM CONTROLLERS IS NOT PERMITTED.

5 GENERAL LOW VOLTAGE LIGHTING CONTROL DETAILS
NOT TO SCALE

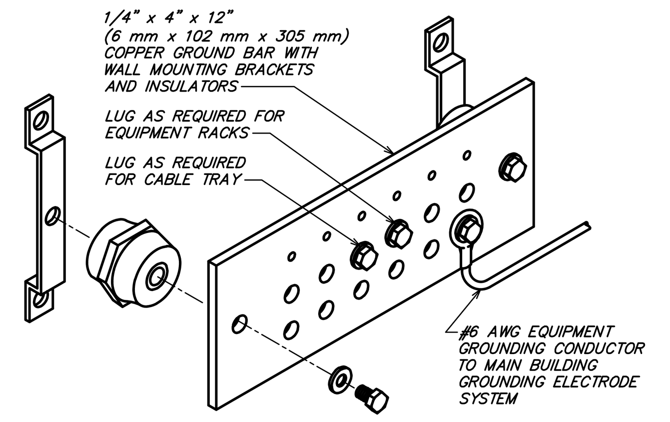

GENERAL NOTES APPLICABLE TO THIS DETAIL:
A. NOT ALL PARTS AND PART NUMBERS ARE SHOWN IN THE DETAIL. THE ELECTRICAL CONTRACTOR IS RESPONSIBLE FOR A COMPLETE WORKING INSTALLATION, INCLUDING MISCELLANEOUS APPURTENANCES REQUIRED BUT NOT SHOWN.

4 GROUND BAR DETAIL
NOT TO SCALE

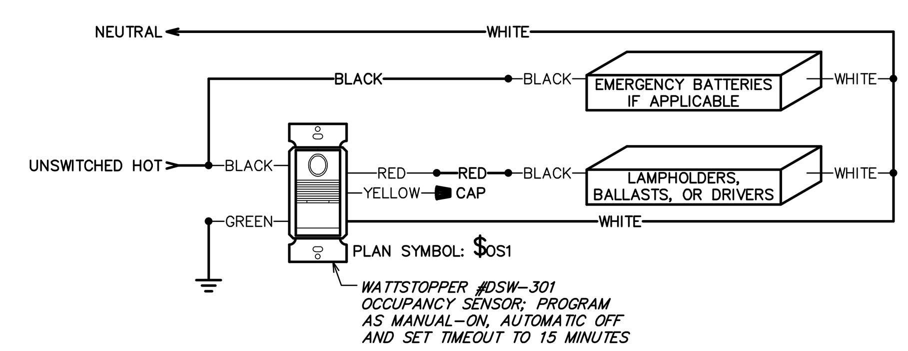

3 TYPICAL SINGLE–ZONE WALL SWITCH OCCUPANCY SENSOR WIRING DIAGRAMS
NOT TO SCALE

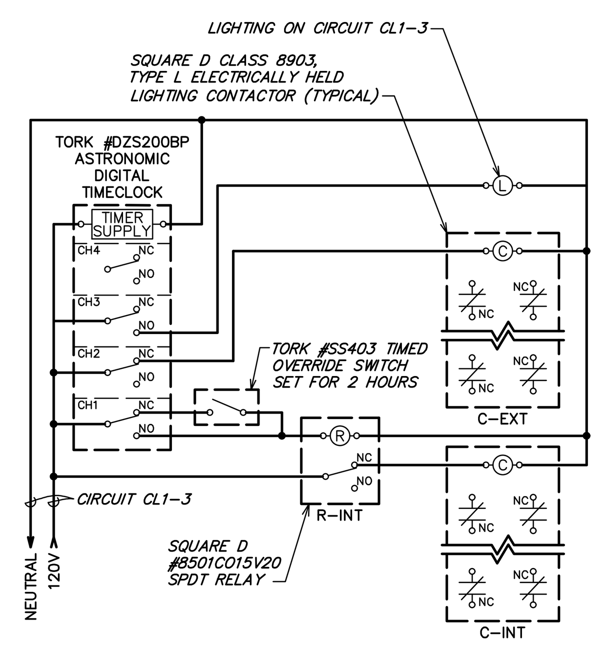

GENERAL NOTES APPLICABLE TO THIS DETAIL:
A. SEE PANEL SCHEDULES FOR CIRCUITS THAT ARE TO BE CONTROLLED BY EACH CONTACTOR.
B. EACH CONTACTOR CONSTITUTES A CONTROL ZONE. ALTHOUGH NOT SPECIFICALLY SHOWN ON THIS DETAIL, PROVIDE MULTIPLE CONTACTORS WIRED IN PARALLEL WHEN THE NUMBER OF CIRCUITS IN A CONTROL ZONE EXCEEDS THE MAXIMUM NUMBER OF POLES AVAILABLE ON A SINGLE CONTACTOR. PROVIDE A MINIMUM OF 2 SPARE CONTACTOR POLES PER CONTROL ZONE.
C. ALL CONTACTORS SHALL BE PROVIDED WITH NORMALLY CLOSED CONTACTS. THE CONTACTORS SHALL BE DELIVERED FROM THE FACTORY WITH NORMALLY CLOSED CONTACTS OR WITH FIELD–CONVERTIBLE CONTACTS. THE CONTRACTOR SHALL FIELD–CONVERT CONTACTORS TO NORMALLY CLOSED WHEN FIELD–CONVERTIBLE NORMALLY OPEN CONTACTS ARE PROVIDED.
D. ANY LOCAL SWITCHING INDICATED ON THE PLANS SHALL BE ON THE LOAD SIDE OF THE CONTACTOR.
E. THE ELECTRICAL CONTRACTOR SHALL PROGRAM ALL TIMECLOCKS AND INDIVIDUAL DIGITAL TIMECLOCK CHANNELS. COORDINATE ALL ON, OFF, AND HOLIDAY SETTINGS WITH THE OWNER. INTERIOR CONTROL ZONES SHALL HAVE THE ASTRONOMIC FUNCTION FOR THE CHANNEL TURNED OFF. EXTERIOR CONTROL ZONES SHALL HAVE THE ASTRONOMIC FUNCTION FOR THE CHANNEL TURNED ON.
F. MOUNT TIMECLOCK, RELAYS, AND CONTACTORS ADJACENT TO THE ASSOCIATED PANELBOARD(S). ALL CONTACTORS AND RELAYS SHALL BE PROVIDED WITH INDIVIDUAL ENCLOSURES. AT THE CONTRACTOR'S OPTION, OPEN RELAYS AND CONTACTORS ARE PERMITTED WHEN MOUNTED WITHIN A COMMON ENCLOSURE.
G. COORDINATE MOUNTING LOCATION OF OVERRIDE SWITCH WITH THE OWNER.
H. PROVIDE TO THE OWNER A VOLUNTARY BID ALTERNATE TO UTILIZE A RELAY PANEL WITH A DIGITAL TIMECLOCK AND LOW VOLTAGE OVERRIDE SWITCH IN LIEU OF THE COMPONENTS SHOWN WITHIN THIS DETAIL.

2 LIGHTING CONTROL DETAIL
NOT TO SCALE

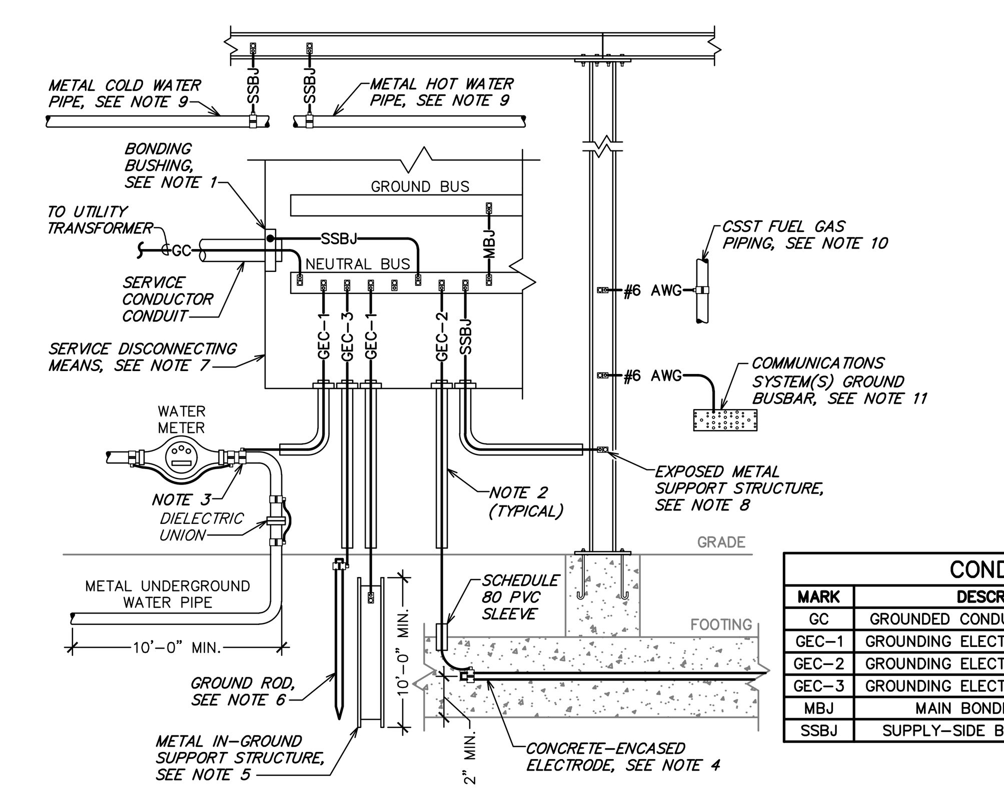

CONDUCTOR SCHEDULE		
MARK	DESCRIPTION	SIZED PER
GC	GROUNDED CONDUCTOR (NEUTRAL)	SEE ONE–LINE DIAGRAM
GEC–1	GROUNDING ELECTRODE CONDUCTOR	NEC TABLE 250.66
GEC–2	GROUNDING ELECTRODE CONDUCTOR	#4 AWG
GEC–3	GROUNDING ELECTRODE CONDUCTOR	#6 AWG
MBJ	MAIN BONDING JUMPER	NEC TABLE 250.102(C)(1)
SSBJ	SUPPLY–SIDE BONDING JUMPER	NEC TABLE 250.102(C)(1)

GENERAL NOTES APPLICABLE TO THIS DETAIL:
A. ALL REFERENCES TO THE NATIONAL ELECTRICAL CODE (NEC) ON THIS DETAIL REFER TO THE 2020 EDITION OF THE NEC (NFPA 70–2020).
B. PHASE CONDUCTORS ARE NOT SHOWN.
C. CONDUCTORS ARE COPPER UNLESS NOTED OTHERWISE.

NOTES APPLICABLE TO THIS DETAIL:
1. PROVIDE A BONDING BUSHING ON ALL METAL CONDUITS CONTAINING SERVICE CONDUCTORS PER NEC SECTION 250.92(B)(4) REQUIREMENTS AND PROVIDE A SUPPLY–SIDE BONDING JUMPER SIZED PER NEC TABLE 250.102(C)(1).
2. WHERE EXPOSED TO PHYSICAL DAMAGE, ENCLOSE GROUNDING ELECTRODE CONDUCTORS IN SCHEDULE 80 PVC CONDUIT PER NEC SECTION 250.64(B) REQUIREMENTS.
A. WHERE SCHEDULE 80 PVC CONDUIT CANNOT BE USED, SUCH AS IN PLENUM CEILINGS, ENCLOSE CONDUCTORS IN RIGID METAL CONDUIT. PROVIDE A BONDING BUSHING AT EACH END PER NEC SECTION 250.64(E)(1) AND PROVIDE SUPPLY–SIDE BONDING JUMPER WHICH IS THE SAME SIZE AS THE ENCLOSED GROUNDING ELECTRODE CONDUCTOR PER NEC SECTION 250.64(E)(3) REQUIREMENTS.
3. PER NEC SECTION 250.52(A)(1), CONNECT TO THE BUILDING'S METAL UNDERGROUND WATER PIPE THAT IS IN DIRECT CONTACT WITH THE EARTH FOR A MINIMUM OF 10 FEET, IF PRESENT. PER NEC SECTION 250.68(C)(1) REQUIREMENTS, THE CONNECTION SHALL BE MADE WITHIN 5 FEET OF THE WATER PIPE'S ENTRANCE INTO THE BUILDING AND A JUMPER SHALL BE PROVIDED AROUND ANY WATER METER AND DIELECTRIC UNIONS. JUMPER SHALL BE THE SAME SIZE AS THE GROUNDING ELECTRODE CONDUCTOR CONNECTING TO THE WATER PIPE.
4. PER NEC SECTION 250.52(A)(3) REQUIREMENTS, PROVIDE A GROUNDING ELECTRODE ENCASED IN AT LEAST 2" OF CONCRETE AND LOCATED NEAR THE BOTTOM OF A CONCRETE FOUNDATION OR FOOTING THAT IS IN DIRECT CONTACT WITH EARTH. GROUNDING ELECTRODE SHALL CONSIST OF AT LEAST 20 FEET OF ONE OR MORE BARE OR ZINC GALVANIZED OR OTHER ELECTRICALLY CONDUCTIVE COATED STEEL REINFORCING BARS OR RODS OF NOT LESS THAN 1/2" IN DIAMETER OR A MINIMUM OF 20 FEET OF #4 AWG BARE COPPER CONDUCTOR. THIS CONCRETE–ENCASED ELECTRODE IS ALSO KNOWN AS A "UFER" GROUND.
5. PER NEC SECTION 250.52(A)(2) REQUIREMENTS, PROVIDE A GROUNDING ELECTRODE CONDUCTOR TO ONE METAL IN–GROUND SUPPORT STRUCTURE THAT IS IN DIRECT CONTACT WITH THE EARTH VERTICALLY FOR 10 FEET OR MORE, IF PRESENT, AND BOND IT USING A UL LISTED IRREVERSIBLE CLAMP OR WELDED LUG.
6. PROVIDE AT LEAST ONE SUPPLEMENTAL GROUNDING ELECTRODE IN THE FORM OF A 10–FOOT LONG BY 3/4" DIAMETER COPPER GROUND ROD INSTALLED PER NEC ARTICLE 250 REQUIREMENTS.
7. WHEN THE SERVICE CONSISTS OF MULTIPLE DISCONNECTING MEANS IN SEPARATE ENCLOSURES, CONNECT A TAP CONDUCTOR FROM THE MAIN GROUNDING ELECTRODE CONDUCTOR TO EACH DISCONNECTING MEANS. SIZE THIS TAP BASED ON THE LARGEST SERVICE CONDUCTOR IN THAT SERVICE DISCONNECT ENCLOSURE.
8. PER NEC SECTION 250.104(C)(2), BOND EXPOSED STRUCTURAL METAL BUILDING FRAME, IF PRESENT, TO THE GROUNDED CONDUCTOR AT THE SERVICE. PER NEC SECTION 250.68(C)(2), THIS STRUCTURAL FRAME IS PERMITTED TO BE USED AS A GROUNDING ELECTRODE CONDUCTOR.
9. PER NEC SECTION 250.104(A), BOND THE METAL WATER PIPING SYSTEM TO THE METAL BUILDING FRAME.
10. PER NFPA 54–2018 SECTION 7.12.2, BOND CORRUGATED STAINLESS STEEL TUBING (CSST) FUEL GAS PIPING, IF PRESENT, TO THE GROUNDING ELECTRODE SYSTEM. THE BONDING CONDUCTOR SHALL NOT EXCEED 75 FEET IN LENGTH PER NFPA 54–2018 SECTION 7.12.2.3.
11. PER NEC SECTION 250.94(B), PROVIDE BURNDY #BCB14412ST, OR EQUAL, 1/4" THICK BY 4" WIDE BY 12" LONG COPPER GROUND BUSBAR, INCLUDING ALL BRACKETS, INSULATORS, AND PLEXIGLASS COVER, AT THE MAIN COMMUNICATIONS SYSTEM ENTRANCE FOR BONDING THE COMMUNICATIONS SYSTEMS TO THE BUILDING'S GROUNDING ELECTRODE SYSTEM.

1 SERVICE ENTRANCE GROUNDING AND BONDING DETAIL
NOT TO SCALE

Schnackel engineers
New York ■ Miami ■ Omaha ■ Los Angeles ■ Seattle ■ Honolulu
800-581-0963 www.schnackel.com

ktgy
17911 Von Karman Ave.
Suite 200
Irvine, CA 92614
ktgy.com
949.851.2133

ktgy Project Number

Contact	DORINA WATSON
Email	dwatson@ktgy.com
Senior Director	DAVID SCHMITZ
Designer	RUSSEL ROSALES

Developer
SEDC
23906 SOBOBA ROAD
SAN JACINTO, CA 92581

PHONE: (951) 663-2058

SOBOBA SOVOVATUM VILLAGE PHASE-2
-
SAN JACINTO, CA

No.	DATE	DESCRIPTION

Client is responsible for notifying architect in writing for any discovered errors or omissions in the plans and specifications during construction of the project. Failure for Client to notify Architect of any known errors or omissions in the plans or specifications, and proceeding with constructing the portion of work shown in the plans or specifications containing known errors or omissions shall be a waiver by Client for any liability of Architect for such known errors or omissions. Client releases Architect for any liability for such portions of work, and Architect shall not be liable for any delay damages, change orders, repair costs, removal or demolition costs, or replacement of any such portions of work.

2026-05-26, ISSUED FOR BID

Sheet Name
ELECTRICAL DETAILS

E2-11

SE JOB#: 250720

COPYRIGHT 2024 KTGY GROUP INC. These plans and specifications are protected by United States copyright law and may not be used, reproduced, distributed, transmitted, displayed, or modified in any way without the prior written consent of KTGY Group, Inc. or the authorized copyright holder or licensee.

ktgy

17911 Von Karman Ave.
Suite 200
Irvine, CA 92614
ktgy.com
949.851.2133

ktgy Project Number

Contact DORINA WATSON
Email dwatson@ktgy.com
Senior Director DAVID SCHMITZ
Designer RUSSEL ROSALES

Developer
SEDC
23906 SOBOBA ROAD
SAN JACINTO, CA 92581

PHONE: (951) 663-2058

SOBOBA SOVOVATUM VILLAGE PHASE-2

SAN JACINTO, CA

PANEL "CL1"

FED FROM: POWER PANEL "MDP1"
VOLTAGE: 208Y/120V, 3 PHASE, 4 WIRE
BUS MATERIAL: ALUMINUM OR COPPER
BUS LOAD: 80 AMPS
BUS RATING: 100 AMPS
MAIN: MAIN LUG ONLY

MOUNTING: SURFACE MOUNTED
ENCLOSURE: NEMA 1
FAULT CURRENT: 18749 AMPS
AIR/SCCR RATING: 22 KA
OPTIONS: BONDED EQUIPMENT GROUND BAR

NOTES	CKT.	LOAD DESCRIPTION	LOAD (VA) A	LOAD (VA) B	LOAD (VA) C	BREAKER	BREAKER	LOAD (VA) A	LOAD (VA) B	LOAD (VA) C	LOAD DESCRIPTION	CKT.	NOTES
C-EXT	1	EXTERIOR LIGHTING	175			20/1	20/1	1000			FLOOR RECEPT.	2	
TC	3	EXTERIOR LIGHTING		447		20/1	20/1		1000		FLOOR RECEPT.	4	
C-INT	5	CASINO LIGHTING			1715	20/1	20/1			1000	FLOOR RECEPT.	6	
	7	CASHIER LIGHTING	290			20/1	20/1	1000			FLOOR RECEPT.	8	
	9	FLOOR RECEPT.		1000		20/1	20/1		1200		SIGNAGE	10	C-EXT
	11	FLOOR RECEPT.			1000	20/1	20/1			360	SHOW WINDOW RECEPT.	12	
	13	FLOOR RECEPT.	1000			20/1	20/1	1080			CASHIER RECEPT.	14	
HPL	15	HAND DRYER		1500		20/1	20/1		180		PIT RECEPT.	16	
	17	RECEPT.			180	20/1	20/1			360	MACHINE ROOM RECEPT.	18	
	19	RECEPT.	360			20/1	20/1	1000			FLOOR RECEPT.	20	
GFCI	21	EWC		600		20/1	20/1		1000		FLOOR RECEPT.	22	
	23	RECEPT.			360	20/1	20/1			360	RECEPT.	24	
HPL	25	HAND DRYER	1500			20/1	20/1	1000			FLOOR RECEPT.	26	
	27	FLOOR RECEPT.		1000		20/1	20/1		1000		FLOOR RECEPT.	28	
	29	FLOOR RECEPT.			1000	20/1	20/1			1000	FLOOR RECEPT.	30	
	31	FLOOR RECEPT.	1000			20/1	20/1	1000			FLOOR RECEPT.	32	
	33	FLOOR RECEPT.		1000		20/1	20/1		1000		FLOOR RECEPT.	34	
	35	FLOOR RECEPT.			1000	20/1	20/1			1000	FLOOR RECEPT.	36	
	37	FLOOR RECEPT.	1000			20/1	20/1	1000			FLOOR RECEPT.	38	
	39	SPARE				20/1	20/1		180		SHOW WINDOW RECEPT.	40	
C-INT	41	P-1			528	15/1	20/1			1200	SIGNAGE	42	C-EXT

NOTES:
GENERAL 1: PROVIDE A HANDLE TIE TO INTERLOCK ALL CIRCUIT BREAKERS WHICH COMPRISE A MULTIWIRE BRANCH CIRCUIT.
GFCI PROVIDE GROUND-FAULT CIRCUIT INTERRUPTER (GFCI) 5 MILLIAMP TRIP TYPE CIRCUIT BREAKER. PROVIDE EXTERNAL GFCI DEVICE IF A GFCI CIRCUIT BREAKER IS NOT AVAILABLE.
HPL PROVIDE PERMANENTLY-INSTALLED HANDLE PADLOCK ACCESSORY TO LOCK CIRCUIT BREAKER IN THE OPEN POSITION.
C-# ROUTE CIRCUIT THROUGH CONTACTOR (# = CONTACTOR DESIGNATION).
TC ROUTE CIRCUIT THROUGH TIMECLOCK FOR AUTOMATIC CONTROL. SEE LIGHTING CONTROL DETAILS.

LOAD ANALYSIS FOR PANEL "CL1" (INCLUDING SUBFEEDS)

LOAD DESCRIPTION	DEMAND FACTOR	PHASE A (VA) CONNECT.	PHASE A (VA) DEMAND	PHASE B (VA) CONNECT.	PHASE B (VA) DEMAND	PHASE C (VA) CONNECT.	PHASE C (VA) DEMAND	TOTAL (VA) CONNECT.	TOTAL (VA) DEMAND
LIGHTING:	125%	465	582	447	559	1715	2144	2627	3284
RECEPTACLE:	69%	10440	7227	7960	5510	7620	5275	26020	18010
OTHER CONTINUOUS:	125%	0	0	1200	1500	1200	1500	2400	3000
OTHER NONCONTINUOUS:	100%	1500	1500	1500	1500	0	0	3000	3000
MOTOR:	100%	0	0	0	0	528	528	528	528
ADD 25% OF LARGEST MOTOR:	100%	0	44	0	44	0	44	0	132
TOTAL:		12405	9352	11107	9113	11063	9491	34575	27954
EQUIVALENT CURRENT (AMPS):		104	78	93	76	93	79	96	78
PHASE BALANCE:			0.36%		-2.21%		1.85%		

PANEL "CL2"

FED FROM: POWER PANEL "MDP1"
VOLTAGE: 208Y/120V, 3 PHASE, 4 WIRE
BUS MATERIAL: ALUMINUM OR COPPER
BUS LOAD: 72 AMPS
BUS RATING: 100 AMPS
MAIN: MAIN LUG ONLY

MOUNTING: SURFACE MOUNTED
ENCLOSURE: NEMA 1
FAULT CURRENT: 18762 AMPS
AIR/SCCR RATING: 22 KA
OPTIONS: BONDED EQUIPMENT GROUND BAR

NOTES	CKT.	LOAD DESCRIPTION	LOAD (VA) A	LOAD (VA) B	LOAD (VA) C	BREAKER	BREAKER	LOAD (VA) A	LOAD (VA) B	LOAD (VA) C	LOAD DESCRIPTION	CKT.	NOTES
	1	SPARE				20/1	20/1	540			OFFICE RECEPT.	2	
	3	OFFICE LIGHTING		817		20/1	20/1		720		OFFICE RECEPT.	4	
	5	RECEPT.			180	20/1	20/1			540	OFFICE RECEPT.	6	
HPL	7	HAND DRYER	1500			20/1	20/1	1500			HAND DRYER	8	HPL
GFCI	9	EWC		600		20/1	20/1		360		COUNTER RECEPT.	10	
	11	COUNTER RECEPT.			360	20/1	20/1			360	COUNTER RECEPT.	12	
	13	COUNTER RECEPT.	360			20/1	20/1	540			OPEN OFFICE RECEPT.	14	
GFCI	15	DISPOSAL		850		20/1	20/1		540		OFFICE RECEPT.	16	
	17	FLOOR RECEPT.			1000	20/1	20/1			540	OFFICE RECEPT.	18	
	19	FLOOR RECEPT.	1000			20/1	20/1	540			OFFICE RECEPT.	20	
	21	RECEPT.		180		20/1	20/1		180		RECEPT.	22	
	23	OPEN OFFICE LIGHTING			989	20/1	20/1			1000	FLOOR RECEPT.	24	
	25	RECEPT.	540			20/1	20/1	1000			FLOOR RECEPT.	26	
	27	OPEN OFFICE RECEPT.		360		20/1	30/2		2598		HWH-1	28	HPL
C-INT	29	EF-3			166	15/1	---			2598	-----	30	
	31	SPARE				20/1	20/1	1176			P-2	32	NOTE 1
	33	ELEV AUXILIARY		500		20/1	20/1				SPARE	34	
	35	ELEV MACHINE LTG			43	20/1	20/1				SPARE	36	
	37	ELEV PIT LTG	60			20/1					SPACE ONLY	38	
	39	SPARE				20/1					SPACE ONLY	40	
	41	SPACE ONLY									SPACE ONLY	42	

NOTES:
GENERAL 1: PROVIDE A HANDLE TIE TO INTERLOCK ALL CIRCUIT BREAKERS WHICH COMPRISE A MULTIWIRE BRANCH CIRCUIT.
GFCI PROVIDE GROUND-FAULT CIRCUIT INTERRUPTER (GFCI) 5 MILLIAMP TRIP TYPE CIRCUIT BREAKER. PROVIDE EXTERNAL GFCI DEVICE IF A GFCI CIRCUIT BREAKER IS NOT AVAILABLE.
HPL PROVIDE PERMANENTLY-INSTALLED HANDLE PADLOCK ACCESSORY TO LOCK CIRCUIT BREAKER IN THE OPEN POSITION.
C-# ROUTE CIRCUIT THROUGH CONTACTOR (# = CONTACTOR DESIGNATION).
NOTE 1 PROVIDE GROUND-FAULT CIRCUIT INTERRUPTER (GFCI) 5 MILLIAMP TRIP TYPE CIRCUIT BREAKER. PROVIDE EXTERNAL GFCI DEVICE IF A GFCI CIRCUIT BREAKER IS NOT AVAILABLE. ROUTE CIRCUIT THROUGH CONTACTOR 'INT'.

LOAD ANALYSIS FOR PANEL "CL2" (INCLUDING SUBFEEDS)

LOAD DESCRIPTION	DEMAND FACTOR	PHASE A (VA) CONNECT.	PHASE A (VA) DEMAND	PHASE B (VA) CONNECT.	PHASE B (VA) DEMAND	PHASE C (VA) CONNECT.	PHASE C (VA) DEMAND	TOTAL (VA) CONNECT.	TOTAL (VA) DEMAND
LIGHTING:	125%	60	75	817	1022	1032	1290	1909	2387
RECEPTACLE:	94%	4520	4236	2940	2755	3980	3730	11440	10720
OTHER CONTINUOUS:	125%	0	0	500	625	0	0	500	625
OTHER NONCONTINUOUS:	100%	3000	3000	850	850	0	0	3850	3850
WATER HEATING:	100%	0	0	2599	2599	2599	2599	5197	5197
MOTOR:	100%	1176	1176	0	0	166	166	1342	1342
ADD 25% OF LARGEST MOTOR:	100%	0	98	0	98	0	98	0	294
TOTAL:		8756	8585	7706	7948	7777	7882	24238	24414
EQUIVALENT CURRENT (AMPS):		74	72	65	66	66	66	68	68
PHASE BALANCE:			5.49%		-2.34%		-3.15%		

LOAD ANALYSIS FOR POWER PANEL "MDP1" (INCLUDING SUBFEEDS)

LOAD DESCRIPTION	DEMAND FACTOR	PHASE A (VA) CONNECT.	PHASE A (VA) DEMAND	PHASE B (VA) CONNECT.	PHASE B (VA) DEMAND	PHASE C (VA) CONNECT.	PHASE C (VA) DEMAND	TOTAL (VA) CONNECT.	TOTAL (VA) DEMAND
LIGHTING:	125%	525	657	1264	1580	2747	3434	4536	5670
RECEPTACLE:	63%	14960	9477	10900	6905	11600	7349	37460	23730
OTHER CONTINUOUS:	125%	0	0	1700	2125	1200	1500	2900	3625
OTHER NONCONTINUOUS:	100%	4500	4500	2350	2350	0	0	6850	6850
WATER HEATING:	100%	0	0	2599	2599	2599	2599	5197	5197
MOTOR:	100%	26058	26058	24882	24882	25576	25576	76516	76516
ELEVATOR:	100%	8983	8983	8983	8983	8983	8983	26948	26948
ADD 25% OF LARGEST MOTOR:	100%	0	954	0	954	0	954	0	2862
32'-0" SHOW WINDOW AT 200 VA/FT:	100%	2134	2134	2134	2134	2134	2134	6400	6400
TOTAL:		57159	52762	54811	52510	54838	52527	166807	157798
EQUIVALENT CURRENT (AMPS):		484	439	464	437	465	437	471	438
PHASE BALANCE:			0.31%		-0.17%		-0.14%		

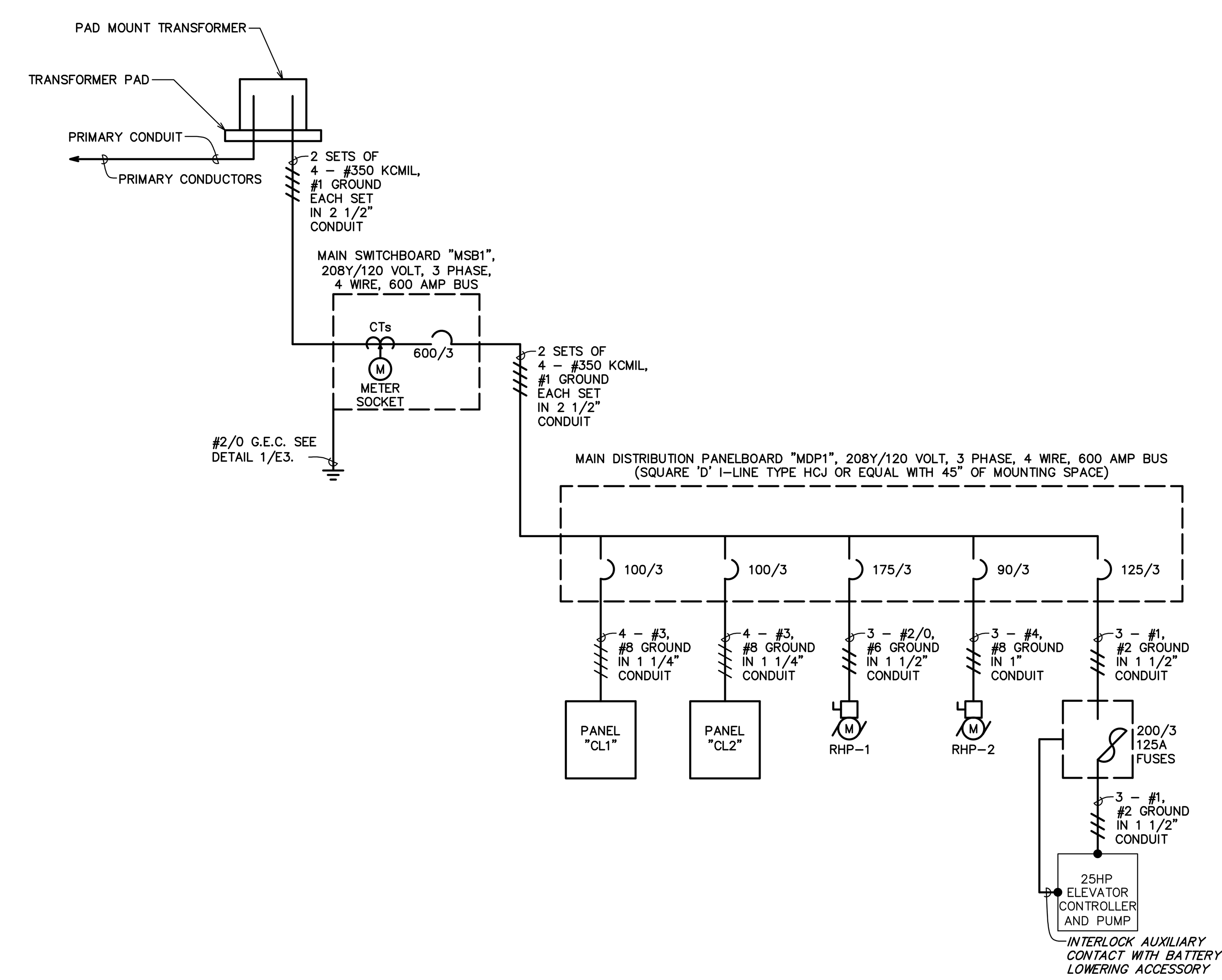

1 ONE-LINE DIAGRAMS
NOT TO SCALE

No.	DATE	DESCRIPTION

Client is responsible for notifying architect in writing for any discovered errors or omissions in the plans and specifications during construction of the project. Failure for Client to notify Architect of any known errors or omissions in the plans or specifications, and proceeding with constructing the portion of work shown in the plans or specifications containing known errors or omissions shall be a waiver by Client for any liability of Architect for such known errors or omissions. Client releases Architect for any liability for such portions of work, and Architect shall not be liable for any delay damages, change orders, repair costs, removal or demolition costs, or replacement of any such portions of work.

2026-05-26, ISSUED FOR BID

Schnackel engineers
New York ■ Miami ■ Omaha ■ Los Angeles ■ Seattle ■ Honolulu
800-581-0963 www.schnackel.com

Sheet Name
ONE-LINE DIAGRAM AND PANEL SCHEDULES

E2-12

SE JOB#: 250720

COPYRIGHT 2024 KTGY GROUP INC. These plans and specifications are protected by United States copyright law and may not be used, reproduced, distributed, transmitted, displayed, or modified in any way without the prior written consent of KTGY Group, Inc. or the authorized copyright holder or licensee.

SECTION 260000 - ELECTRICAL GENERAL CONDITIONS

PART 1 GENERAL

1.01 SUMMARY

A. This section supplements all sections of Divisions 26, 27, and 28 of the specifications and shall apply to all phases of work hereinafter specified, shown on the drawings, or required to provide a complete installation of approved electrical, communications, and electronic safety and security systems.

B. All drawings and specifications, including drawings and specifications related to other divisions, apply to the work. Where conflicts arise between documents, the more stringent requirement will apply, subject to the interpretation of the Engineer.

C. Furnish all labor, material, services, and skilled supervision necessary for the construction, erection, installation, connections, testing, and adjustment of all equipment, materials, and components specified herein, or shown or noted on the drawings, and its delivery to the Owner, complete in all respects and ready for use.

D. Where plans indicate equipment, materials, or components will be furnished by this Contractor for installation by other Contractors, this Contractor shall furnish all such equipment, materials, or components, complete in all respects and ready for installation. Drawings, instructions, and manuals supplied with equipment, materials, or components furnished under this division but installed under other divisions shall be carefully preserved and turned over to the installing Contractor.

E. Where plans indicate equipment, materials, or components will be furnished by others, this Contractor shall provide all rough-in and supplies and shall connect such equipment, materials, or components. Drawings, instructions, and manuals supplied with equipment, materials, or components furnished under separate divisions but installed under this division shall be carefully preserved and turned over to the Owner in the closeout documents.

1.02 DEFINITIONS

A. The following definitions apply throughout the drawings and specifications associated with the work performed under Divisions 26, 27, and 28.
1. Authority Having Jurisdiction: All regulatory agencies, including but not limited to, plans examiners, fire marshals, inspectors, insurance carriers, and utility companies.
2. Concealed: Hidden from sight in chases, furred spaces, shafts, hung ceilings, embedded in construction, in crawl spaces, or underground.
3. Conduit: Conduit or tubing and all required fittings, pull boxes, hangers, and other supports and accessories related to such.
4. Code: All codes and standards, including local amendments, adopted by and/or enforced by the Authority Having Jurisdiction.
5. Connect: To bring service to the equipment and make final attachment including necessary switches, outlets, boxes, terminations, etc.
6. Contract Documents: All drawings, specifications, specified reference standards, applicable codes, manufacturer's installation instructions, and executed legal documents related to the project.
7. Contractor: The contractor(s) or subcontractor(s) responsible for performing the work associated with Divisions 26, 27, and 28, and ultimately the General Contractor.
8. Coordinate: Bring into a common action, movement, or condition prior to rough-in.
9. Drawings: All plans, details, schedules, diagrams, sketches, etc. issued for the construction of the work.
10. Exposed: Not concealed.
11. Furnish: To supply and deliver, unload, and inspect for damage.
12. Install: To unpack, assemble, erect, apply, place, finish, cure, protect, clean, connect, and place into operation into the work.
13. Owner: The entity, including authorized representatives, to which the work is being provided to.
14. Provide: To furnish and install.
15. Work: The construction and services, including all labor, materials, and equipment, required by the contract documents to fulfill the Contractor's obligations. The work may constitute the whole or a part of the project.

1.03 CODES AND STANDARDS

A. Perform work in accordance with code.

B. Perform work in accordance with:
1. Occupational Safety and Health Administration (OSHA) Regulations.
2. Americans with Disabilities Act (ADA).
3. Requirements of the Authority Having Jurisdiction (AHJ).
4. All applicable NECA standards.
5. Manufacturer's instructions.
6. Instructions associated with the component's listing agency's requirements.
7. Landlord requirements including Tenant Criteria Manuals and Lease Exhibits.
8. Utility company requirements. Make all arrangements with the utility companies for proper coordination of the work.

C. Code, Landlord, and utility company requirements supersede any requirements of the contract documents.

D. The contract documents take precedence where the contract documents exceed code, Landlord, utility, or referenced standards requirements.

1.04 PERMITS AND FEES: Permits, licenses, fees, inspections and arrangements required for the work shall be obtained by the Contractor at his expense.

1.05 TEMPORARY SERVICES FOR CONSTRUCTION

A. Provide a temporary electrical service, including all required equipment such as transformers, generators and fuel, panelboards, etc. as required by all trades. Coordinate power requirements for the temporary service with the utility company prior to the start of construction. The Contractor is responsible to develop all temporary service plans and specifications as required by the Authority Having Jurisdiction, submit those plans and specifications as required by the Authority Having Jurisdiction, and to pay for all temporary service energy consumption.

B. Provide all temporary lighting necessary to provide lighting levels in compliance with OSHA Regulations and as required by all trades.

1.06 PREPARATION

A. The Contractor is responsible to obtain, fully understand, and coordinate the work with the complete set of contract documents. Any required corrections, including all associated costs, arising from issues caused by the Contractor's failure to understand and/or coordinate the work with the complete set of contract documents are the Contractor's sole responsibility.

B. Work under these sections is diagrammatic and is intended to convey the scope of work and indicate the general arrangement of equipment, conduit, and outlets. Obtain instructions from the Architect/Engineer prior to rough-in wherever a question exists as to the exact intended location of outlets or equipment.

C. Promptly report any discrepancies discovered within the contract documents. Failure of the Contractor to report discrepancies shall result in the resolution becoming the Contractor's responsibility and subject to the Architect/Engineer's review and possible rejection. Should the Architect/Engineer reject a discrepancy resolution of which they were not notified, the Contractor is fully responsible to correct the installation, including all associated costs, until approval of the installation is given by the Architect/Engineer.

1.07 EXISTING CONDITIONS

A. Verify all existing conditions prior to beginning work.

B. Any existing conditions indicated are based on information provided by others and possible limited field verification.

C. Visit the project site, review existing conditions against the contract documents, and become familiar with the work prior to bidding and start of the work.
1. Verify that products indicated as existing to remain or to be relocated are suitable for reuse.
2. Adjust for actual field conditions at no additional expense to the Owner.
3. If major discrepancies are found, the Contractor shall advise the Architect/Engineer of such deviations in writing so that the appropriate modifications to the design can be made without delay to the project.
a. The Contractor assumes full responsibility of adjusting for discrepancies of which the Architect/Engineer is not informed.
4. Signing the contract is an acknowledgement that the site visit has been completed and the existing conditions are accepted.

D. Verify field measurements and circuiting arrangements are as indicated.

E. Verify that removed wiring and equipment serve only abandoned facilities.

F. Where connections are made between new work and existing work, the connections shall be made by using materials and methods to suit the actual conditions.

G. Where existing work is to be modified, it shall be done in conformance with these specifications. Materials used shall be same as existing except where specified otherwise.

1.08 SUBMITTALS

A. Only submittals specifically required to be provided for Architect/Engineer review within the individual specification sections will be reviewed by the Engineer. Any submittals provided when not required will be returned without Engineer review. Furnish the Architect/Engineer the following product data and/or shop drawings:
1. Product data for floor boxes and all associated cover plates and flanges.
2. Product data for contactors and relays.
3. Product data and shop drawings for lighting control devices and wiring devices used for lighting control.
4. Shop drawings for low voltage transformers.
5. Shop drawings for switchboards.
6. Shop drawings for panelboards.
7. Product data for enclosed switches.
8. Product data for enclosed controllers.
9. Product data for interior and exterior lighting.

B. Indicate the corresponding equipment tag on each unique component or piece of equipment. Product data and/or shop drawings submitted without a corresponding tag will be returned without Engineer review.

C. Indicate all proposed catalog numbers. Product data and/or shop drawings submitted without catalog numbers will be returned without Engineer review.

D. Product data shall consist of manufacturer's standard catalog pages and/or cut-sheets.

E. Shop drawings shall be prepared by an authorized manufacturer's representative. Catalogs and/or cut sheets are not an acceptable shop drawing. Catalogs and/or cut sheets submitted in lieu of any required shop drawings will be returned without Engineer review.

F. Submittals shall be concise and to the point, demonstrating the key performance parameters indicated in the contract documents, major dimensions, and identifying the materials used to manufacture the products. Submittals shall directly address the specific requirements of the contract documents without unnecessary, superfluous information such as non-applicable catalog pages, non-applicable cut sheets, and/or sales brochures. Submittals that are deemed overly voluminous and/or non-specific to the requirements of the contract documents will be returned without Engineer review.

G. Submittals for products that are selected and or/specified by others, including but not limited to elevators and escalators, dock equipment, motorized doors, smoke curtains and shutters, luminaires where indicated, etc., will be reviewed only for the characteristics that affect the electrical design such as voltage, phase, power, and luminaire dimming protocols. The General Contractor shall obtain the review and associated approvals from all other associated design consultants for all other characteristics of products that are selected and or/specified by others.

H. The Architect/Engineer's review shall not relieve the Contractor from responsibility for errors within the submittals.

I. If a submittal deviates from the requirements of the contract documents, the Contractor shall advise the Architect/Engineer of the deviation in writing accompanying the submittal, including the reason for the deviation.

1.09 QUALITY ASSURANCE

A. All Products:
1. Listed, classified, and labeled by an organization recognized by OSHA as a Nationally Recognized Testing Laboratory (NRTL) and acceptable to Authority Having Jurisdiction as suitable for the purpose specified and indicated.
2. Listed and classified by the Authority Having Jurisdiction and furnished with an acceptance number, where applicable.
3. Listed and classified by the Landlord's and/or Owner's insurance carrier (FM, IRI, etc.), where applicable.

B. All equipment, materials, and components shall be free of all rust/corrosion or any visible damage. All items not complying with this requirement shall be replaced at no additional cost to the Owner.

C. Unless otherwise indicated, all equipment, materials, and components of the same type or classification and used for the same purpose shall be products of the same manufacturer.

D. Use only new, un-weathered, and unused equipment, materials, and components, unless indicated otherwise.

1.10 WARRANTY AND GUARANTEE

A. Provide a complete parts and labor warranty and guarantee on all systems installed for a period of one year from Owner acceptance of the completed facility. This warranty and guarantee shall cover all failures of any equipment, materials or installation, unless such failure is directly attributable to vandalism, or causes other than defects in material or workmanship.

B. Additional warranty and guarantee terms in excess of this requirement are specified within the individual sections.

PART 2 PRODUCTS

2.01 LUGS AND TERMINALS

A. All lugs and terminals shall be suitable for use with 75 degree C (167 degree F) or 90 degree C (194 degree F) wire. Lugs and terminals which are rated for use with exclusively 60 degree C (140 degree F) wire are not permitted. No exceptions.

2.02 SUBSTITUTIONS

A. The products specified in the Contract Documents constitute the Basis of Design for the Construction Documents and set minimum standards for quality, design, and functionality. Other products are permitted to be submitted, at the Contractor's option, during shop drawing review unless indicated otherwise. Any substitute products shall meet or exceed all requirements specified. Any costs and coordination issues arising out of any substitution, including coordination with all other contractors and subcontractors and any associated costs, is the substituting contractor's sole responsibility.

PART 3 EXECUTION

3.01 COORDINATION OF WORK

A. Examine the contract documents as a whole for the work of other trades and coordinate all work accordingly.

B. Work lines and established heights shall be in strict accordance with the contract documents. Verify all dimensions shown and establish all elevations and detailed dimensions not shown.

C. Promptly report to the Architect/Engineer any delay or difficulties encountered in the installation of the work which might prevent prompt and proper installation or make it unsuitable to connect with or receive the work of others. Failure to so report shall constitute an acceptance of the work of other trades as being fit and proper for the execution of this work.

D. Plan, lay out, and coordinate the work with all trades well enough in advance so that it proceeds with a minimum of interference to work that has not been completed and work that is in progress.
1. Inform all trades of openings required for the work and provide all special frames, sleeves, and anchor bolts required.
2. The electrical layout may be altered to suit the conditions with Architect/Engineer approval, prior to the installation of any work and without additional cost to the Owner.
3. Perform all work in compliance with the contract documents and afford other trades reasonable opportunity for the execution of their work.
4. Properly connect and coordinate this work with the work of other trades at such time and in such a manner as not to delay or interfere with their work.
5. Conflicts arising from lack of coordination shall be the Contractor's responsibility.
a. The Contractor shall pay for all extra cutting and patching made necessary by his failure to properly direct such work at the correct time.

E. Install equipment, materials, and components to provide for maximum headroom. Maintain access to equipment requiring service when selecting mounting elevations.

F. Install equipment to facilitate servicing, maintenance, and repair or replacement of equipment components. As much as practical, connect equipment for ease of disconnecting, with minimum of interference with other installations.

G. Install equipment, materials, and components level and plumb, parallel and perpendicular to building lines when exposed to view, unless otherwise indicated.

H. Subcontract with the roofing manufacturer's authorized Roofing Contractor to flash and weather seal all roof penetrations and include all associated costs in the contract. The use of an unauthorized Roofing Contractor may result in removal and replacement of the penetration systems at this Contractor's expense.

I. Verify and coordinate all requirements and installation details of all equipment, materials, and components that are to be furnished by other trades and installed or connected by the Contractor prior to rough-in. Conflicts arising from lack of coordination shall be the Contractor's responsibility. As such, the Contractor is responsible to:
1. Obtain and review shop drawings, product data, manufacturer's wiring diagrams, and manufacturer's instructions for equipment, materials, and components furnished under other sections.
2. Determine connection locations and requirements.
3. Sequence rough-in of connections to coordinate with installation of equipment.
4. Sequence connections to coordinate with start-up of equipment.
5. Verify that proper power supply is available prior to subcontractors ordering equipment. Verify proper voltage, phase and current rating of power supply and inform Engineer of any deviations prior to order, connection of equipment or start-up. Responsibility for verification of proper power supply voltage and any damage resulting from incorrect connections shall rest with this Contractor.

J. Where crane rental or other erection is required, such costs shall be included in the Subcontractor's contract, unless specific arrangements are made with the General Contractor to cover these costs.

3.02 DELIVERY, STORAGE, AND HANDLING: Accept all materials on site and inspect for damage and protect from corrosion and entrance of debris. Handle all materials in accordance with manufacturer's instructions to avoid damage to internal components, enclosures, and finishes.

3.03 INTERFACES

A. Fire and Smoke Rated Assemblies: The Contractor shall familiarize himself with all fire and smoke rated construction and install his work so as to maintain the integrity of the fire and smoke rating.
1. Install all equipment, materials, and components to preserve fire resistance rating of partitions and other elements, using materials and methods specified.
2. Seal annular space around conduits.
3. Use Nationally Recognized Testing Laboratory-listed material that maintains fire rated wall and floor integrity.

B. Route conduit through roof openings for piping and ductwork wherever possible. Where separate roofing penetration is required, coordinate location and installation method with roofing installation.

3.04 FIELD QUALITY CONTROL

A. Install all equipment, devices, luminaires, and materials plumb, level, securely, and in a neat and workmanlike manner in accordance with code and all applicable NECA and NEMA standards.

B. Adjust all flush mounted equipment, boxes, cabinets, and enclosures such that they are flush with finished wall or flooring material.

C. Explicitly follow manufacturer's instruction sheets for the installation of all equipment, materials, and components. Where manufacturer's instruction sheets conflict with requirements of the drawings or specifications, such conflicts shall be brought to the attention of the Architect/Engineer for clarification.

D. Although all such work is not specifically indicated, provide all supplementary or miscellaneous items, appurtenances and devices incidental to or necessary for a sound, secure and complete installation.

E. Provide tests as necessary to establish the adequacy, quality, safety, completed status, and suitable operation of each system.

F. Any existing service lines and utilities structures shown or indicated on the drawings, the location of which is known to the Contractor prior to excavation or construction of fills or embankments, shall be protected and safeguarded from damage during grading operations and, if damaged, shall be repaired by the Contractor at his expense. The above provisions are applicable to all service lines or utilities structures, all or any portion of which protrudes above the original ground surface or lies beneath the ground surface within any area.

G. Seal equipment, materials, and components exposed to the weather and make weather-tight and insect-proof.

H. Surface Preparation:
1. Prepare all conduit, fittings, supports, and equipment enclosures exposed to the weather for painting by removing therefrom all oil, grease and dirt. Employ the necessary precautionary methods to prevent scratching or defacing of all apparatus and equipment.
2. Provide hot dip galvanized components for ferrous materials exposed to the weather. Provide a minimum of one coat of rust inhibiting primer paint for all materials after fabrication, color as selected by the Architect.
3. Degrease and clean all surfaces of equipment, materials, and components that are to be painted or are to receive nameplates or labels.

I. All equipment, materials, and components located on exterior walls or on the roof where exposed to view from the ground shall be finish painted to match the surrounding surfaces. Paint colors shall be as selected by the Architect. The above provisions shall apply to all exposed equipment and materials visible from 6'-0" (1.8 m) above grade from any property line. The Architect may, at his sole option, elect to not paint any item deemed acceptable in appearance.

J. All equipment, materials, and components shall be connected providing circuit continuity in accordance with applicable codes whether or not each component is shown between such items and the point of circuit origin.

K. Replace or refinish damaged equipment, devices, luminaires, materials, and surfaces where marring or disfigurement has occurred.

L. Clean electrical parts to remove harmful materials. Clean exposed surfaces of all equipment, devices, luminaires, and materials and the interior of all boxes, enclosures, and cabinets of all foreign materials.

3.05 ACCESS TO EQUIPMENT

A. Install all equipment, starters, switches, receptacles, and boxes so that all parts are easily accessible for inspection, operation, maintenance and repair. If concealed, provide access doors. Provide fire rated access doors where required by the fire resistance rating of the wall or ceiling in which the door is installed.

3.06 EQUIPMENT CLEARANCES

A. Working Spaces: Install all equipment which is likely to require examination, adjustment, servicing, or maintenance, including equipment installed in limited access areas such as above accessible ceilings, such that all working spaces required by NFPA 70 are maintained.
1. Coordinate with all contractors to ensure equipment which is installed by others and connected by this Contractor is provided with working space at the point where the electrical system interfaces with the equipment.

B. Dedicated Equipment Spaces: Install all switchboards, switchgear, panelboards, and motor control centers in dedicated equipment spaces as required by NFPA 70.

C. Ventilation: Install all equipment requiring ventilation per the more stringent requirement of code-required ventilation clearance requirements or the manufacturer's recommendations.

3.07 CUTTING, PATCHING, AND PIERCING

A. Cutting of openings and installation of sleeves or frames through walls and surfaces shall be done in a neat workmanlike manner. Openings shall be cut only as large as required for the installation; sleeves and/or frames installed flush with finished surfaces and grouted in place. Surfaces around openings shall be left smooth and finished to match surrounding surface.

B. Obtain written permission of the Architect/Engineer before cutting or piercing structural members. Use craftsmen skilled in their respective trades for cutting, fitting, repairing, patching of plaster, and finishing of materials including carpentry work, metal work, or concrete work required for this work.

C. Do not weaken walls, partitions, or floors with cutting. Holes required to be cut in floors must be drilled without breaking out around the holes. The Architect/Engineer will determine suitability of patching and/or refinishing requirements.

D. Patch all openings resulting from the installation or removal of equipment, materials, and components.

E. Provide and maintain temporary partitions or dust barriers adequate to prevent the spread of dust and dirt to adjacent areas.

F. Patch existing finished surfaces and building components using new materials matching existing materials and experienced subcontractors.

3.08 TESTING AND INSPECTION

A. Testing: Upon completion, the entire system shall be tested under operating conditions.
1. After completion of the work, but before final payment is made, the Contractor shall run a test over a sufficient period of time to prove the proper capacity and performance of all equipment, devices, luminaires, systems, etc.
2. All equipment shall be tested under service conditions and proven to operate to the satisfaction of the Owner.
3. All controls and safety devices shall be thoroughly checked to assure proper operation and protection.
4. Correct any deficiencies and retest.

B. Inspection: Upon completion of the work, obtain certificates of inspection and approval from all City and/or State Authorities Having Jurisdiction.

3.09 PROJECT CLOSEOUT

A. Project Record Documents:
1. Provide one printed copy and one electronic copy of project record drawings to the Owner.
2. Project record drawings shall reflect the actual "as-built" conditions and shall include locations of all equipment, devices, and luminaires, circuiting arrangements, routing of all underfloor conduits, routing of conduits larger than 2 inches (53 mm), locations and mounting heights of all outlet, pull, and junction boxes, locations of all items requiring maintenance and inspection, and locations of components and circuiting and switching arrangements of lighting controls.
3. These drawings shall remain at the construction site throughout construction and shall be updated on a daily basis.
4. These drawings shall be available for review by the Architect/Engineer at all times.

B. Operation and Maintenance Data:
1. Provide one printed copy and one electronic copy of operation and maintenance data to the Owner, including:
a. All submittals.
b. All manufacturers' warranty information.
c. All certificates of compliance with testing or regulatory requirements.
d. All test reports.
2. Organize all information by specification section.

C. Maintenance Materials:
1. Provide to the Owner two keys for each different enclosure and cabinet, including panelboards, two spare fuses of each type and size, and one fuse puller.

END OF SECTION

SECTION 260502 - TRENCHING AND BACKFILL FOR ELECTRICAL

PART 1 GENERAL

1.01 DEFINITIONS

A. Subgrade Elevations: 4 inches below finish grade unless directed otherwise.

B. Finish Grade Elevations: 4 inches above subgrade unless directed otherwise.

1.02 PROJECT CONDITIONS

A. Provide sufficient quantities of fill and store materials on site in advance of need. Separate differing materials with dividers or stockpile separately and protect stockpiles from erosion and deterioration of materials.

B. Verify all survey bench marks and intended elevations for the work.

C. Protect all existing landscaping, hardscaping, existing structures, benchmarks, survey control points, and other features to remain from excavating equipment and vehicular traffic.

PART 2 PRODUCTS

2.01 FILL MATERIALS

A. General Fill: Subsoil excavated from site and free of lumps larger than 3 inches, rocks larger than 2 inches, and debris.

B. Granular Fill: Natural stone pea gravel free of clay, shale, and organic matter.

C. Topsoil: Select topsoil excavated from site and free of roots, rocks larger than 1/2 inch, subsoil, debris, large weeds and foreign matter.

PART 3 EXECUTION

3.01 EXAMINATION

A. Identify required lines, levels, contours, and datum locations.

B. Locate and identify all utilities and protect same from damage.

3.02 TRENCHING

A. Report any unexpected subsurface conditions and discontinue affected work in area until notified to resume.

B. Do not interfere with 45 degree bearing splay of foundations.

C. Cut trenches wide enough to allow inspection of installed utilities. Slope banks of excavations deeper than 4 feet to angle of repose or less until shored.

D. Hand trim excavations and remove loose matter, large stones, and other hard matter which could damage utilities or impede consistent backfilling or compaction.

3.03 PREPARATION FOR UTILITY PLACEMENT

A. Replace soft areas of subgrade not capable of compaction with general fill.

B. Compact subgrade to density equal to or greater than requirements for subsequent fill material.

C. Maintain excavations and prevent loose soil from falling into excavation until ready for backfill.

3.04 BEDDING AND FILL

A. Backfill to contours and elevations required using unfrozen materials and a placement method that does not disturb or damage other work.

B. Unless indicated otherwise, use granular fill bedding covered with general fill up to finished grade elevation and compact all fill materials in equal continuous layers not exceeding 8 inches compacted depth to 97 percent of maximum dry density.

C. Fill thrust bearing surfaces with concrete.

3.05 FIELD QUALITY CONTROL

A. Perform compaction density testing every 2 feet on compacted fill in accordance with ASTM D1556, ASTM D2167, ASTM D2922, or ASTM D3017. Evaluate results in relation to compaction curve in accordance with ASTM D698, ASTM D1557, or AASHTO T 180. Remove, replace, and retest fill if tests indicate work does not meet specified requirements.

END OF SECTION

SECTION 260519 - CONDUCTORS AND CABLES

PART 1 GENERAL - NOT USED

PART 2 PRODUCTS

2.01 BUILDING WIRE AND CABLES

A. Provide single conductor building wire installed in raceway unless indicated otherwise, otherwise permitted, or otherwise required.

B. All conductors shall be copper conductors with 600V insulation; type THHN for dry and damp locations and type THWN-2 for wet locations.
1. Substitution of aluminum conductors for copper is permitted, when approved by Engineer and Authority Having Jurisdiction, only as a substitute for copper wiring sized #1/0 AWG and larger.
a. Where aluminum conductors are substituted for copper, comply with the following:
1. Aluminum conductors shall be AA-8000 series aluminum alloy conductors recognized by ASTM B800 and compact stranded in accordance with ASTM B801 unless otherwise indicated.
2. Size aluminum conductors to provide, when compared to copper sizes indicated, equivalent or greater ampacity and equivalent or less voltage drop.
3. Increase size of raceways, boxes, wiring gutters, enclosures, etc. as required to accommodate aluminum conductors.
4. Provide aluminum equipment grounding conductor sized according to NFPA 70.
5. Equip electrical distribution equipment with compression lugs for terminating aluminum conductors.

C. Metal Clad Cable (Type MC): Permitted only for branch circuits in concealed locations and only when approved by applicable codes and amendments and the Authority Having Jurisdiction. Exposed MC Cable is not permitted; no exceptions.
1. All MC Cable sheaths shall be listed and identified for grounding.
2. All MC Cable shall be equipped with copper equipment grounding conductor. No exceptions.

D. Nonmetallic-Sheathed Cable (Type NM): Type NM-B permitted only within individual dwelling units and common areas of multifamily dwelling occupancies which are Type III, IV, or V construction when permitted by all local and national codes and amendments and the Authority Having Jurisdiction. Exposed NM Cable is not permitted; no exceptions.

E. Use solid or stranded conductors for all conductors 10 AWG and smaller. Use stranded conductors for all conductors 8 AWG and larger.

F. Wire Sizes:
1. Use 12 AWG conductors, minimum, for all circuits unless indicated otherwise or as modified as follows:
a. 20A, 120V circuits longer than 75 feet: 10 AWG to offset voltage drop.
b. 20A, 120V circuits longer than 150 feet: 8 AWG to offset voltage drop.
c. 20A, 277V circuits longer than 150 feet: 10 AWG to offset voltage drop.
2. Wire sizes indicated on the Drawings or indicated above shall be carried through the entire circuit to the furthest outlet box on the associated circuit unless indicated otherwise.
a. Where a circuit splits into multiple branches, the wire size shall be carried through the entirety of each branch to the furthest outlet box on each branch unless indicated otherwise.

2.02 CONTROL CABLES

A. All control cable conductor sizes, quantities, stranding, and shielding as recommended by the manufacturer and required for the installation but no smaller than 18 AWG.

B. Horizontal Applications in Conduit: Type CL2 unless otherwise required.

C. Horizontal Applications not in Conduit: Type CL2P unless otherwise required.

D. Riser Applications: Type CL2R unless otherwise required.

2.03 COMMUNICATIONS CABLES: See Section 271005.

2.04 WIRING CONNECTORS

A. Use twist-on insulated spring connectors, mechanical connectors, or compression connectors for conductor sizes 8 AWG and smaller. Do not use push-in wire connectors as a substitute for twist-on insulated spring connectors.

B. Use mechanical connectors or compression connectors for conductor sizes 6 AWG and larger.

C. Use crimped terminals for all control circuit conductor connections.

PART 3 EXECUTION

3.01 PREPARATION: Clean raceways thoroughly to remove foreign materials before installing conductors and cables.

3.02 COLOR CODING

A. Color code conductors as follows and maintain consistent color coding throughout project including branch circuit conductors.
1. 208Y/120 V, 3 phase, 4 Wire System
a. Phase A: Black
b. Phase B: Red
c. Phase C: Blue
d. Neutral/Grounded: White
2. Equipment Ground: Green

3.03 INSTALLATION

A. Circuit routing indicated is diagrammatic. Arrange circuiting to minimize splices and include circuit lengths required to install connected devices within 10 feet of location shown.

B. Combining branch circuits in a single raceway is permitted under the following conditions:
1. Provide no more than six current-carrying conductors in a single raceway. Dedicated neutral conductors are considered current-carrying conductors.
2. Increase size of conductors as required to account for ampacity derating.
3. Size raceways, boxes, etc. to accommodate conductors.

C. Neutral Conductors:
1. Provide separate neutral conductors for:
a. Branch circuits protected by ground fault circuit interrupter (GFCI) circuit breakers.
b. Branch circuits protected by arc fault circuit interrupter (AFCI) circuit breakers.
c. Branch circuits protected by shunt trip circuit breakers.
d. Branch circuits fed from feed-through protection of GFCI receptacles.
e. Branch circuits with dimming controls.
f. Branch circuits that serve emergency lighting equipment such as emergency batteries or emergency lighting unit equipment.
g. Where indicated by the wire counts shown on the Drawings.
2. Multiwire branch circuits (shared neutrals) are permitted where not otherwise indicated.
a. Locate all multiwire branch circuits in vertically adjacent panelboard pole spaces and provide circuit breaker handle ties to simultaneously disconnect all ungrounded circuit conductors.

D. Pull all conductors together into raceway at same time, do not damage conductors or exceed manufacturer's recommended maximum pulling tension or sidewall pressure, and use suitable wire pulling lubricant where recommended by the manufacturer.

E. Secure and support conductors and cables in accordance with NFPA 70 using supports and methods approved by the Authority Having Jurisdiction. Provide independent support from building structure; do not support from raceways, piping, ductwork, suspended ceiling support systems, or other systems and do not allow conductors or cables to lay on ceiling tiles.

F. Cut all cables per the manufacturer's recommendations and terminate using suitable fittings including anti-short, insulated bushings where applicable.

G. Provide a minimum of 12 inches of slack at each outlet. Provide a minimum of 5 feet of slack where conductors are installed in enclosures for future termination by others.

H. Neatly train and bundle conductors inside boxes, wireways, panelboards and other equipment enclosures.

I. Make wiring connections using specified wiring connectors and make splices and taps only in accessible boxes. Do not pull splices into raceways or make splices in conduit bodies.

J. Do not remove conductor strands to facilitate insertion into connector. Provide connectors suitable for reducing to appropriate size, but not less than required for the rating of the overcurrent protective device, where conductors are larger than the equipment terminations can accommodate.

K. Insulate splices and taps that are made with uninsulated connectors using insulating covers specifically designed for the connectors, or electrical tape for dry or damp locations. Use heat shrink tubing for wet locations.

L. Provide final connections to all equipment and devices, including those furnished by others, as required for a complete operating system.

M. Provide all control wiring and communications cabling, whether or not shown on the Drawings, per manufacturer's recommendations and as required for a complete and operational system.

END OF SECTION

SECTION 260526 - GROUNDING AND BONDING

PART 1 GENERAL

1.01 MAXIMUM GROUNDING SYSTEM RESISTANCE: 5 ohms.

PART 2 PRODUCTS

2.01 ROD ELECTRODES: Copper, 3/4 inch diameter, 10 foot long solid rods. Sectional rods are not permitted.

2.02 CONCRETE ENCASED ELECTRODES: 4 AWG, 20 foot long bare copper wire.

2.03 WIRE: Copper wire sized to meet NFPA 70 requirements.

2.04 CONNECTORS AND ACCESSORIES: Copper, copper alloy, or bronze mechanical connectors.

PART 3 EXECUTION

3.01 INSTALLATION OF GROUNDING ELECTRODE SYSTEM

A. As applicable to the project, provide all components required for a complete grounding electrode system including bonding of metal underground water pipe, metal frame of the building, concrete-encased electrode, metal aboveground water piping system, metal aboveground gas piping system, and rod electrode(s) per NFPA 70 requirements.

3.02 INSTALLATION OF EQUIPMENT GROUNDING SYSTEM

A. Without exception, provide insulated equipment grounding conductor sized per NFPA 70 requirements within each feeder and branch circuit raceway and terminate each end on suitable lug, bus, or bushing.

3.03 TESTING

A. Measure grounding resistance using Fall of Potential Method or Signal Injection Method. Provide additional rod electrodes as required to reduce grounding resistance to less than the specified maximum permitted value.

END OF SECTION

SECTION 260529 - HANGERS AND SUPPORTS FOR ELECTRICAL SYSTEMS

PART 1 GENERAL - NOT USED

PART 2 PRODUCTS

2.01 HANGERS AND SUPPORTS

A. Corrosion-resistant materials of size and type adequate to carry the supported weight, including the weight of wire in conduit; do not use perforated pipe straps as a means of support.

2.02 ANCHORS AND FASTENERS

A. Use precast inserts, preset inserts, expansion anchors, or self-drilling anchors as approved by the Structural Engineer for concrete elements.

B. Use beam clamps, steel spring clips, steel ramset fasteners, or welded fasteners for steel elements.

C. Use toggle bolts or hollow wall fasteners for hollow masonry, plaster, and gypsum board partitions.

D. Use expansion anchors or preset inserts for solid masonry walls.

E. Use sheet metal screws for sheet metal elements and wood screws for wood elements.

PART 3 EXECUTION

3.01 INSTALLATION

A. Provide all required blocking and supplemental framing required to securely support all materials.

B. Fasten supports to building structure and surfaces only. Do not fasten supports to pipes, ducts, mechanical equipment, conduit, or ceiling suspension wires.

C. Obtain permission from Structural Engineer before drilling or cutting structural members or before using powder-actuated anchors.

D. Rigidly weld support members or use hex-bolts to present neat appearance with adequate strength and rigidity. Provide lock washers under all nuts.

E. Install surface-mounted cabinets and panelboards with minimum of four anchors.

F. Provide steel channel supports behind all cabinets and panelboards located in damp or wet locations to stand enclosures 1 inch off wall.

G. Provide supports for all low voltage wiring not routed in conduit.

END OF SECTION

SECTION 260534 - CONDUIT AND WIREWAYS

PART 1 GENERAL - NOT USED

PART 2 PRODUCTS

2.01 CONDUIT

A. Size: As required by NFPA 70 for the conductors installed but no smaller than specified.
1. Sizes Indicated on the Drawings:
a. Any conduit sizes indicated to a utility transformer are based on Schedule 80 PVC conduit.
b. Any conduit sizes indicated to the primary or secondary of a dry-type transformer are based on Flexible Metal Conduit (FMC).
c. All other conduit sizes are based on Electrical Metallic Tubing (EMT).
d. The Contractor is responsible to adjust conduit sizes as required when a different conduit type is used.

B. Underground: 3/4 inch minimum rigid metal conduit, intermediate metal conduit, Schedule 80 PVC, or Schedule 40 PVC. Metal conduits shall be galvanized or PVC coated.

C. Outdoor Locations above Grade: 1/2 inch minimum rigid metal conduit or intermediate metal conduit. Nonmetallic conduit is not permitted above grade. Conduits shall be galvanized or PVC coated.

D. Within Slabs above Grade: 3/4 inch minimum rigid metal conduit, intermediate metal conduit, or Schedule 80 PVC. Metal conduits shall be galvanized or PVC coated. Coordinate with the Structural Engineer for restrictions and limitations on conduits installed in slabs above grade.

E. Exposed Wet and Damp Locations: 1/2 inch minimum rigid metal conduit or intermediate metal conduit. Conduits shall be galvanized or PVC coated.

F. Connections to Vibrating Equipment and Luminaires in Dry Locations: 1/2 inch minimum flexible metal conduit.

G. Connections to Vibrating Equipment and Luminaires in Damp and Wet Locations: 1/2 inch minimum liquidtight flexible metal conduit.

H. All Other Dry Locations: 1/2 inch minimum rigid metal conduit, intermediate metal conduit, or electrical metallic tubing.

2.02 FITTINGS: Provide listed fittings identified for use with the conduit.

2.03 WIREWAYS: Square D Class 5100 Type LDB for dry locations or Square D Class 5100 Type LDR for damp and wet locations unless indicated otherwise; size as required by NFPA 70 based on conductor fill and bending radius requirements.

PART 3 EXECUTION

3.01 INSTALLATION

A. Conceal all conduit in all interior and exterior areas, including exposed structure areas, unless the Architect provides specific approval permitting the use of exposed conduit.

B. Route any exposed conduit parallel and perpendicular to walls.

C. Subject to the Architect's approval, conduit located above ceilings is permitted to be routed point-to-point provided it is secured and supported per NFPA 70 requirements and complies with all applicable Codes and other requirements of the specifications.

D. Do not embed conduit in slabs-on-grade. Locate conduit a minimum of 2 inches below the bottom surface of the slab to avoid future damage from cutting of the floor slab.

E. Route conduit in slabs-above-grade from point-to-point. Do not cross conduits embedded in slabs.

F. Route underground conduit from point-to-point and at a burial depth in compliance with NFPA 70, local code, and utility company requirements.

G. Arrange conduit to maintain headroom and present neat appearance and arrange supports to prevent misalignment during wiring installation.

H. Secure and support all conduit in compliance with NFPA 70 requirements and group adjacent conduits on steel channel racks and trapezes.

I. Provide 12 inches of clearance between conduit and piping or surfaces with temperatures exceeding 104 degrees F.

J. Install no more than equivalent of three 90 degree bends between boxes.

K. Provide sleeves when penetrating footings, masonry walls and floors and seal all penetrations through footings and floors water tight.

L. Provide suitable fittings to accommodate expansion and deflection where conduit crosses seismic, control, and expansion joints.

M. Provide suitable pull string in each empty conduit except sleeves and nipples.

N. Provide caps to protect installed conduit against entrance of dirt and moisture.

O. Secure wireway to building surfaces and close ends of wireway and unused conduit openings.

P. Ground and bond conduit and wireways as required by NFPA 70.

END OF SECTION

SECTION 260537 - BOXES

PART 1 GENERAL - NOT USED

PART 2 PRODUCTS

2.01 ALL BOXES

A. Nonmetallic boxes are not permitted unless indicated otherwise or without specific written approval from the Architect.

B. Provide all required box hangers and supports, extension rings, mud rings, etc. for a complete and secure installation.

C. Use gang boxes where more than one device is mounted together; do not use sectional boxes.
1. Provide partitions between devices of differing operating voltages.

2.02 OUTLET AND SMALL JUNCTION BOXES

A. Dry and Damp Locations: Galvanized NEMA OS 1 stamped steel box rated for the weight of the equipment supported and sized per NFPA 70 requirements for the device(s) and conductors installed within.

B. Wet Locations: Galvanized cast metal NEMA FB 1 Type FD box with gasketed cover and threaded hubs and sized per NFPA 70 requirements for the device(s) and conductors installed within.

2.03 PULL AND LARGE JUNCTION BOXES

A. Dry and Damp Locations: Galvanized NEMA OS 1 stamped steel box sized per NFPA 70 requirements for the conductors installed within.

B. Wet Locations: Galvanized NEMA 250 Type 4 cast iron or cast aluminum box with ground flange, neoprene gasket, and stainless steel cover screws and sized per NFPA 70 requirements for the conductors installed within.

2.04 FLOOR BOXES

A. All Floor Boxes: Nonmetallic floor boxes are permitted. All metal floor boxes located in slabs on grade shall be cast metal. Metal floor boxes installed in elevated slabs are permitted to be stamped steel.

B. Indoor Flush Floor Boxes for Concrete Floors:
1. Nonmetallic: Wiremold Modulink 880MP2 Series unless indicated otherwise with number of gangs as required for the devices installed within.
2. Metal: Wiremold Omnibox Series unless indicated otherwise with number of gangs as required for the devices installed within.

C. Indoor Flush Floor Boxes for Wood Floors:
1. Nonmetallic: Wiremold WMFB Series unless indicated otherwise with number of gangs as required for the devices installed within.
2. Metal: Wiremold 880W Series unless indicated otherwise with number of gangs as required for the devices installed within.

D. Indoor Recessed Floor Boxes: Wiremold RFB Series unless indicated otherwise with number of compartments as required for the devices installed within.

E. Exterior Floor Boxes: Wiremold Outdoor Ground Box Series unless indicated otherwise with wiring devices indicated.

PART 3 EXECUTION

3.01 INSTALLATION

A. Install in locations indicated and as required for splices, taps, wire pulling, equipment connections, and as required by NFPA 70.

B. Install pull boxes and junction boxes above accessible ceilings and in unfinished areas only.

C. Install outlet boxes for all wall-mounted wiring devices at heights indicated in Section 262726 unless indicated otherwise. Coordinate mounting heights and locations of outlets mounted above counters, benches, and backsplashes prior to rough-in.

D. Use flush boxes in finished areas. Do not install flush boxes back-to-back in walls; provide minimum 6 inches and one stud separation.

E. Locate flush boxes in masonry walls to require cutting of masonry unit corner only. Coordinate masonry cutting to achieve neat opening.

F. Install all wall-mounted boxes plumb and level.

G. Install all ceiling-mounted boxes level and oriented parallel with building lines and ceiling grid tees where applicable.

H. Install all floor boxes level and oriented parallel with building lines and tile grout lines where applicable.

I. Vertically align adjacent wall mounted outlet boxes for switches, thermostats, similar devices.

J. Install concealed boxes within 6 inches from ceiling access panels, air distribution diffusers, or removable recessed luminaires.

K. Support boxes independently of conduit; do not support boxes from ceiling support wires.

L. Install knockout closures in unused box openings.

M. Install cover plates on boxes; see Section 262726 for cover plate specifications.

N. Ground and bond boxes as required by NFPA 70.

END OF SECTION

SECTION 260540 - UNDERFLOOR DUCTS

PART 1 GENERAL

1.01 PREPARATION: Determine depth of concrete and determine height of presets and supports required to position presets at correct height.

PART 2 PRODUCTS

2.01 UNDERFLOOR DUCT: Wiremold Walkerduct Pro Series #D424** unless indicated otherwise in lengths as required and with preset heights as required.

2.02 DUCT ACCESSORIES: Provide all components, fittings, supports, alignment clips, mudcaps, marker caps, extensions, and other accessories required for a complete duct system.

2.03 SERVICE FITTINGS

2.04 All Service Fittings:
1. Color and materials as selected by Architect.
2. Provide all adapters and trims required for a complete installation.

2.05 Carpet and Tile Flanges: Wiremold Walkerduct Pro Series with number of gangs as required for activation.

2.06 Receptacle Cover Plates: Wiremold Walkerduct Pro Series with flip lids unless indicated otherwise.

2.07 Communications Cover Plates: Wiremold Walkerduct Pro Series combination threaded plug with 1-inch inner plug unless indicated otherwise.

2.08 Hardwired Connection Cover Plates: Wiremold Walkerduct Pro Series combination concentric threaded plug with 3/4-inch inner plug unless indicated otherwise.

PART 3 EXECUTION

3.01 INSTALLATION

A. Install duct parallel and perpendicular to building lines unless indicated otherwise.

B. Align presets of multiple parallel duct runs.

C. Install duct supports located according to manufacturer's recommendations, but not exceeding 5 feet between supports. Permanently fasten duct supports to the supporting framework.

D. Install duct level and located such that the top of the presets is located 1/8 to 3/8 inch below screed line or as required by manufacturer.

E. Provide expansion fittings with bonding jumper where duct crosses expansion joints.

F. Provide marker caps in each preset adjacent to junction boxes, at end of each duct run, on both sides of permanent partitions, and on both sides of change in direction of duct. Adjust markers to be flush with finished floor except only extend through backing material for carpeted areas.

G. Ground and bond duct as required by NFPA 70.

H. Seal duct system connections and openings with duct tape or manufacturer's recommended compound to prevent entry of concrete prior to concrete placement.

I. Protect installed duct system from subsequent construction operations. Do not allow equipment or heavy traffic over the duct system without using ramps that prevent load from being transferred to the duct.

J. Clean interior of duct system to remove moisture and foreign matter after concrete placement and before installation of conductors and cables.

K. Install service fittings after installation of floor finishes. Cut floors according to manufacturer's instructions as required.

END OF SECTION

SECTION 260553 - IDENTIFICATION FOR ELECTRICAL SYSTEMS

PART 1 GENERAL - NOT USED

PART 2 PRODUCTS

2.01 NAMEPLATES: Engraved laminated plastic with 1/8 inch letters on contrasting background.

2.02 LABELS: As required by regulatory agencies.

2.03 WIRE MARKERS: Cloth, tape, split sleeve, or tubing type.

PART 3 EXECUTION

3.01 NAMEPLATES: Provide nameplates with the unique equipment designation at each electrical distribution and control equipment enclosure, communication cabinet, and control device station.

3.02 WARNING LABELS: Provide all regulatory required and industry standard warning labels on all electrical equipment, including high-voltage, tested series rated combination, and arc flash hazard labeling.

3.03 WIRE MARKERS: Provide wire and cable markers at panelboard gutters, pull boxes, outlet boxes, and junction boxes for each load connection. Indicate branch circuit or feeder number indicated on Drawings and control wire number indicated on shop drawings.

3.04 COLOR CODE LEGEND: Provide identification label identifying conductor color codes at each piece of feeder or branch-circuit distribution equipment.

3.05 INSTALLATION

A. Install nameplates and labels parallel to equipment lines.

B. Secure nameplates for distribution equipment visible to the public to the inside surface of door.

C. Secure nameplates for distribution equipment not visible to the public to the front of the enclosure using screws, rivets, or adhesive.

END OF SECTION

SECTION 260595 - FIRE STOPPING

PART 1 GENERAL

1.01 PREPARATION: Examine the complete set of Drawings and identify all fire rated partitions, floors and assemblies and identify appropriate firestopping method for the assembly.

PART 2 PRODUCTS

2.01 FIRESTOPPING ASSEMBLIES: Use only systems listed by UL or FM or tested in accordance with ASTM E 814 or ASTM E 119 that have F Rating equal to fire rating of penetrated assembly and minimum T Rating Equal to F Rating.

2.02 MATERIALS: Elastomeric silicone firestopping, foam firestopping, fibered compound firestopping, fiber packing material, mechanical firestop devices, intumescent putty, and firestop pillows are permitted.

PART 3 EXECUTION

3.01 INSTALLATION

A. Comply with firestopping manufacturer's recommendations for temperature and other environmental conditions before, during, and after installation. Provide ventilation in areas where solvent-cured materials are being installed.

B. Protect adjacent surfaces from damage by material installation.

C. Clean substrate surfaces of dirt, dust, grease, oil, loose material, or other matter which may affect bond of firestopping material. Remove incompatible materials which may affect bond. Install backing materials to arrest liquid material leakage.

D. Apply the appropriate fire stopping materials and systems to maintain the fire rating of the partition, floor, or ceiling assembly being penetrated.

E. Install materials in manner described in fire test report and in accordance with manufacturer's instructions, completely closing openings.

F. Do not cover installed firestopping until inspected by Authority Having Jurisdiction.

G. Install any labeling required by Code.

H. Clean adjacent surfaces of firestopping materials.

END OF SECTION

SECTION 260919 - CONTACTORS AND RELAYS

PART 1 GENERAL - NOT USED

PART 2 PRODUCTS

2.01 CONTACTORS

A. Description: Square D Class 8903, Type L or Type S unless indicated otherwise or otherwise required.

B. Contacts:
1. Provide with quantity of normally open and normally closed contacts as required and a minimum of two spare poles.
a. Provide multiple contactors connected in parallel with one another when the number of contacts required exceeds the maximum capability of a single contactor.
2. Coordinate contact rating to match branch circuit overcurrent protection, considering derating for continuous loads, but no less than 30 amps.

C. Coil: Coordinate with the voltage of the control circuit.

D. Enclosure: Manufacturer's standard enclosure suitable for the environment in which the contactor is installed.

2.02 RELAYS

A. Description: Square D Class 8501 Type C unless indicated otherwise or otherwise required.

B. Contacts: Form C contacts rated at 30 amperes unless indicated otherwise.

C. Coil: Coordinate with the voltage of the control circuit.

D. Enclosure: Manufacturer's standard enclosure suitable for the environment in which the relay is installed.

PART 3 EXECUTION

3.01 INSTALLATION

A. Install individual controls and relays in enclosures adjacent to panelboard serving controlled circuits and make electrical wiring interconnections.

B. Provide all relays, contactors, interposing relays, and controls that are required but may not be shown to switch the loads in the manner indicated on the Drawings.

C. Provide nameplate for contactors indicating contactor number.

END OF SECTION

SECTION 260923 - LIGHTING CONTROL DEVICES

PART 1 GENERAL

1.01 PREPARATION

A. Hold meeting with the Owner prior to commencing work.
1. Review zoning and make adjustments requested by the Owner.
2. Determine all timeclock settings such as ON and OFF times for each day of the week, holiday settings, latitude and longitude of the project site for astronomic features, etc.
3. Determine all control settings such as on and off triggers, blink warnings, sweep settings, switch programming, etc.

PART 2 PRODUCTS

2.01 ALL LIGHTING CONTROL DEVICES

A. Provide all required conduit, wiring, connectors, hardware, components, accessories, etc. as required for a complete operating system.

B. All sensors shall be suitable for the geometrical and environmental characteristics of the associated space and be suitable for the floor area to be covered. Provide multiple sensors when necessary to meet the required room coverage.

2.02 INDOOR OCCUPANCY SENSORS

A. Wall Switch:
1. Single-Relay: Wattstopper #DSW-301 unless indicated otherwise.
2. Dual-Relay: Wattstopper #DSW-302 unless indicated otherwise.
3. Finish: As selected by the Architect.

B. Combination Wall Switch / Dimmer:
1. 0-10V Dimming: Wattstopper #DW-311 unless indicated otherwise; finish as selected by the Architect.

C. Wall-Mounted:
1. Sensor: Wattstopper #DT-200 unless indicated otherwise.
2. Power Pack: Wattstopper #BZ-250 unless indicated otherwise.
3. Finish: White.

D. Ceiling-Mounted:
1. Sensor: Wattstopper #DT-300 unless indicated otherwise.
2. Power Pack: Wattstopper #BZ-250 unless indicated otherwise.
3. Finish: White.

E. Accessories: Provide heavy duty coated steel wire protective guards compatible with specified occupancy sensors where subject to impact.

2.03 TIMECLOCKS

A. Tork DZS series unless indicated otherwise.

B. Input Voltage: Coordinate with the voltage of the control circuit.

C. Enclosure: Manufacturer's standard enclosure suitable for the environment in which the timeclock is installed.

2.04 TIMER SWITCHES: Tork #SS403 unless indicated otherwise.

2.05 OUTDOOR PHOTOCELLS: Tork #2101 unless indicated otherwise.

2.06 INDOOR SWITCHING PHOTOSENSORS

A. Sensor: Wattstopper #LS-102 unless indicated otherwise.

B. Power Pack: Wattstopper #BZ-250 unless indicated otherwise.

C. Finish: White.

2.07 INDOOR 0-10 VOLT DIMMING PHOTOSENSORS

A. Sensor: Wattstopper #LS-301 unless indicated otherwise.

B. Power Pack: Wattstopper #BZ-250 unless indicated otherwise.

C. Finish: White.

D. Configuration Tool: Wattstopper #LSR-301-S unless indicated otherwise.

E. Remote Control: Wattstopper #LSR-301-P unless indicated otherwise.

PART 3 EXECUTION

3.01 GENERAL INSTALLATION REQUIREMENTS

A. Provide all control wiring and communications cabling, whether or not shown on the Drawings, per manufacturer's recommendations and as required for a complete and operational system.

B. Program the entire system as established in meeting with the Owner.

3.02 INSTALLATION OF TIMECLOCKS

A. Install timeclocks adjacent to panelboard serving controlled circuits and make electrical wiring interconnections.

B. Provide all relays, contactors, interposing relays, and controls that are required but may not be shown to switch the loads in the manner indicated on the Drawings.

C. Provide nameplate for timeclocks indicating timeclock number.

3.03 INSTALLATION OF OCCUPANCY SENSORS AND MOTION SENSORS

A. Location Adjustments: Locations indicated are diagrammatic and only intended to indicate which rooms or areas require devices. Provide quantity and locations as required for complete coverage of respective room or area based on manufacturer's recommendations for installed devices.

B. Install ultrasonic and dual technology occupancy sensors a minimum of 4 feet from air supply ducts or other sources of heavy air flow and as per manufacturer's recommendations, in order to minimize false triggers.

C. Program occupancy sensors as MANUAL-ON, AUTOMATIC-OFF unless indicated otherwise.

D. Mask sensor lenses using the manufacturer's masking material as required to prevent false triggers.

E. Adjust position of directional occupancy sensors and outdoor motion sensors to achieve optimal coverage as required.

3.04 INSTALLATION OF INDOOR PHOTOSENSORS

A. Location Adjustments: Locations indicated are diagrammatic and only intended to indicate which rooms or areas require devices. Provide quantity and locations as required for complete coverage of respective room or area based on manufacturer's recommendations for installed devices.

B. Install closed-loop photosensors to accurately measure the light level at the designated task location while minimizing the measured amount of direct light from natural or artificial sources.

C. Install open-loop photosensors to accurately measure the level of daylight coming into the space while minimizing the measured amount of lighting from artificial sources.

D. Calibrate dimming photosensors such that 100% artificial light output is provided only when completely dark outside and the controlled lighting dims commensurately with the amount of natural daylight contribution to the satisfaction of the Owner. Calibration shall occur after all room finishes, furniture, and window treatments have been installed.

3.05 INSTALLATION OF POWER PACKS

A. Install power packs on junction box in accessible location above ceiling at the associated sensor.

B. Do not switch power serving power packs. All required switching shall occur on the load side of the power pack relay.

3.06 INSTALLATION OF OUTDOOR PHOTOCELLS

A. Install photocell facing north with unobstructed view.

B. Install such that photocell does not face artificial light sources including light sources controlled by the photocell itself.

C. Weatherproof all connections. Do not install photocell with conduit stem facing up to prevent infiltration of water.

Schnackel engineers

New York ■ Miami ■ Omaha ■ Los Angeles ■ Seattle ■ Honolulu
800-581-0963 www.schnackel.com

ktgy

17911 Von Karman Ave.
Suite 200
Irvine, CA 92614
ktgy.com
949.851.2133

ktgy Project Number
Contact DORINA WATSON
Email dwatson@ktgy.com
Senior Director DAVID SCHMITZ
Designer RUSSEL ROSALES

Developer
SEDC
23906 SOBOBA ROAD
SAN JACINTO, CA 92581

PHONE: (951) 663-2058

SOBOBA SOVOVATUM VILLAGE PHASE-2

- SAN JACINTO, CA

No.	DATE	DESCRIPTION

Client is responsible for notifying architect in writing for any discovered errors or omissions in the plans and specifications during construction of the project. Failure for Client to notify Architect of any known errors or omissions in the plans or specifications, and proceeding with constructing the portion of work shown in the plans or specifications containing known errors or omissions shall be a waiver by Client for any liability of Architect for such known errors or omissions. Client releases Architect for any liability for such portions of work, and Architect shall not be liable for any delay damages, change orders, repair costs, removal or demolition costs, or replacement of any such portions of work.

2026-05-26, ISSUED FOR BID

Sheet Name
ELECTRICAL SPECIFICATIONS

E3-11

SE JOB#: 250720

COPYRIGHT 2024 KTGY GROUP INC. These plans and specifications are protected by United States copyright law and may not be used, reproduced, distributed, transmitted, displayed, or modified in any way without the prior written consent of KTGY Group, Inc. or the authorized copyright holder or licensee.

D. Adjust external sliding shields under optimum lighting conditions to achieve desired turn-on and turn-off activation.

3.07 CLOSEOUT
A. Demonstrate proper operation of lighting control devices to the Owner and correct deficiencies or make adjustments as directed.
B. Train Owner's personnel on operation, adjustment, programming, and maintenance of lighting control devices.
C. Provide a written report of all program settings and photosensor settings to the Owner.

END OF SECTION

SECTION 262413 - SWITCHBOARDS

PART 1 GENERAL - NOT USED

PART 2 PRODUCTS
2.01 SWITCHBOARDS
A. Description: Front-accessible, rear-aligned Square D Power-Style QED-2 unless indicated otherwise.
B. Voltage, Phase, and Current Ratings: As indicated or otherwise required.
C. Short-Circuit Current Rating (SCCR): No less than the available fault current. The Contractor shall determine the available fault current where not indicated on the Drawings.
D. Bussing: Aluminum with tin plating.
1. Provide fully rated busses throughout the switchboard; tapered busses are not permitted.
2. Equip each section with vertical busses that fully extend from the bottom to the top of the switchboard.
E. Ground Bus: Extend entire length of switchboard.
F. Pull Section: Provide only where indicated or otherwise required by the utility company.
G. Enclosure: Manufacturer's standard enclosure suitable for the environment in which the switchboard is installed.
H. Future Provisions:
1. Fully equip all horizontal busses with provisions for adding future sections.
2. Provide additional overcurrent protection device mounting space for a minimum of two future 200 amp overcurrent protection devices.
2.02 OVERCURRENT PROTECTION DEVICES
A. Amp Interrupting Capacity (AIC) Rating: No less than the available fault current; fully rated or manufacturer tested series combination. The Contractor shall determine the available fault current where not indicated on the Drawings.
B. Fusible Switch Assemblies:
1. Smaller than 800 Amps: NEMA KS 1, load interrupter enclosed knife switch with lockable externally operable handle with interlock to prevent opening front cover with switch in ON position.
2. 800 Amperes and Larger: Bolted pressure contact switches.
3. Provide ground-fault protection of equipment (GFPE) for fusible switches rated 1000 amps or more when used on solidly grounded wye systems of more than 150 volts to ground.
4. Fuse clips: Designed to accommodate fuses indicated, rejection type fuses.
C. Circuit Breakers:
1. Smaller than 200 Amps: Molded case circuit breaker with fixed integral thermal and instantaneous magnetic trip in each pole.
2. 200 Amps through 800 Amps: Molded case circuit breaker field-changeable thermal and instantaneous magnetic trip in each pole.
3. Larger than 800 Amps: Electronic trip unit with adjustable long-time pickup, long-time delay, short-time pickup, short-time delay, instantaneous pickup, ground-fault pickup, and ground-fault delay settings.
4. Provide circuit breakers UL listed as Type HACR for air conditioning equipment branch circuits.
5. Provide shunt trip where indicated or required.
6. Provide arc energy-reducing maintenance switch with local status indicator for each circuit breaker rated 1,200 amps or more.
2.03 UTILITY METERING PROVISIONS
A. Equip switchboard with provisions for the installation of utility meters for mains and/or branches where indicated or required by the utility company.
1. Provide instrument transformer compartment where indicated or required by the utility company; compartment size, bus spacing and drilling, door, and locking and sealing requirements in accordance with utility company's requirements.
B. All metering provisions shall accommodate the local utility company's revenue meters.
C. Coordinate all requirements with the local utility company and comply with all utility company metering regulations and requirements.
D. Submit metering switchgear shop drawings to the utility company for approval prior to placing the order.
2.04 POWER METERS
A. Description: Schneider Electric PowerLogic PM820 mounted within switchboard cover with all required instrument transformers.
B. Position instrument transformers such that power meter measures and records data at the switchboard's incoming power location.

PART 3 EXECUTION
3.01 INSTALLATION
A. Provide 3 inch thick concrete housekeeping pad that extends a minimum of 3 inches past the equipment footprint on both ends and the front.
B. Verify switchboard will physically fit within designated space.
C. Install switchboard in locations indicated.
D. Tighten accessible bus connections and mechanical fasteners after placing switchboard.
E. Install fuses in each fusible switch.
F. Adjust all operating mechanisms for free mechanical movement.
G. Tighten bolted bus connections in accordance with manufacturer's instructions.
H. Adjust electronic circuit breaker pickup and delay settings per manufacturer's recommendations.
I. Provide nameplate indicating switchboard equipment designation for each switchboard.
J. Provide nameplate indicating load equipment designation for each disconnect.

END OF SECTION

SECTION 262416 - PANELBOARDS

PART 1 GENERAL - NOT USED

PART 2 PRODUCTS
2.01 LIGHTING AND APPLIANCE PANELBOARDS
A. Description: Square D Type NQ for 240 Volt Class and Square D Type NF for 600 Volt Class unless indicated otherwise.
B. Voltage, Phase, and Current Ratings: As indicated or otherwise required.
C. Short-Circuit Current Rating (SCCR): No less than the available fault current. The Contractor shall determine the available fault current where not indicated on the Drawings.
D. Bussing: As indicated.
E. Bonded Equipment Ground Bar: Provide for each panelboard.
F. Isolated Ground Bar: Provide for each panelboard that serves isolated ground loads.
G. Enclosure: Manufacturer's standard enclosure suitable for the environment in which the panelboard is installed; 5.75 inches deep, 20 inches wide unless indicated otherwise; surface or flush mounted as indicated.
H. Cabinet Front: Surface or flush type as indicated with hinged door, flush lock, metal directory frame and finished in manufacturer's standard enamel.
I. Circuit Breakers:
1. Bolt-on thermal-magnetic molded case circuit breakers with common trip handle for all poles.
a. Provide Type SWD for lighting circuits.
b. Provide Type HACR for heating, air-conditioning, and refrigeration equipment circuits.
c. Provide Class A ground-fault circuit interrupter (GFCI) where indicated or otherwise required.
d. Provide ground-fault protection of equipment (GFPE) where serving heat tracing or otherwise required.
e. Provide combination type arc-fault circuit interrupter (AFCI) where indicated or otherwise required.
f. Provide dual-rated combination type arc-fault circuit interrupter (AFCI) and Class A ground-fault circuit interrupter (GFCI) where indicated or otherwise required.
2. Accessories:
a. Provide handle ties for circuit breakers serving multiwire branch circuits.
b. Provide Square D #HL01 handle clamps for circuit breakers denoted as "HLO" and for all fire protection and fire alarm equipment and all circuits serving emergency lighting.
c. Provide Square D #QO*PAF fixed handle padlock attachment for circuit breakers denoted as "HPL" and for appliances without a local disconnecting means.
d. Provide shunt trip were denoted as "ST" or otherwise required.
3. Amp Interrupting Capacity (AIC) Rating: No less than the available fault current; fully rated or manufacturer tested series combination. The Contractor shall determine the available fault current where not indicated on the Drawings.
4. Do not use multi-pole circuit breakers that mount in a 1-pole circuit breaker space (i.e. half-size circuit breakers).
2.02 POWER DISTRIBUTION PANELBOARDS
A. Description: Square D Class 2110, I-Line Type unless indicated otherwise.
B. Voltage, Phase, and Current Ratings: As indicated or otherwise required.
C. Short-Circuit Current Rating (SCCR): No less than the available fault current. The Contractor shall determine the available fault current where not indicated on the Drawings.
D. Bussing: Aluminum or copper.
1. Provide fully rated busses throughout the panelboard; tapered busses are not permitted.
2. Equip each section with vertical busses that fully extend from the bottom to the top of the panelboard.
E. Ground Bus: Extend length of panelboard.
F. Enclosure: Manufacturer's standard enclosure suitable for the environment in which the panelboard is installed; surface or flush mounted as indicated.
G. Cabinet Front: Surface or flush type as indicated with hinged door, flush lock, metal directory frame and finished in manufacturer's standard enamel.
H. Future Provisions:
1. Provide additional overcurrent protection device mounting space for a minimum of two future 200 amp overcurrent protection devices.
I. Circuit Breakers:
1. Thermal-magnetic molded case circuit breakers with common trip handle for all poles.
a. Provide Type HACR for heating, air-conditioning, and refrigeration equipment circuits.
b. Provide arc energy-reducing maintenance switch with local status indicator for each circuit breaker rated 1,200 amps or more.
2. Accessories:
a. Provide shunt trip were denoted as "ST" or otherwise required.
3. Amp Interrupting Capacity (AIC) Rating: No less than the available fault current; fully rated or manufacturer tested series combination. The Contractor shall determine the available fault current where not indicated on the Drawings.
2.03 BRANCH CIRCUIT POWER MONITORING SYSTEM (BCPMS)
A. Where indicated on the Drawings or when load disaggregation is required by the applicable Energy Code, provide a Square D Powerlogic Branch Circuit Power Meter (BCPM) system consisting of:
1. Two side-gutter mounted current transformer (CT) strips with an appropriately sized current transformer for each panelboard pole space.
2. Data acquisition board mounted within panelboard enclosure.
3. Square D #EGX300 data collector/web gateway/server.
4. All required communications cabling for a complete functional branch circuit power monitoring system.
B. It is the Contractor's responsibility to order the branch circuit power monitoring system in sufficient time so as to not delay the construction schedule.
C. At the Contractor's option, the use of split-bus or load disaggregation panelboards is permitted in lieu of a branch circuit power monitoring system.
1. If split-bus or load disaggregation panelboards are used in lieu of a branch circuit power monitoring system, the Contractor is responsible to coordinate all aspects of the substitution including, but not limited to:
a. Confirming the substituted equipment will physically fit within the allotted space.
b. Rearranging circuits as required to group loads within the panelboard per Energy Code requirements.
c. Providing any additional neutrals necessary to rearrange panelboard circuits.
d. Providing a complete set of record drawings indicating all circuit number changes on both the plans and the panel schedules.
2. All adjustments and coordination associated with the substitution shall be at no additional expense to the Owner.

PART 3 EXECUTION
3.01 INSTALLATION
A. Install panelboards 6 feet to top of panelboard but no less than 4 inches above floor.
B. Provide 3 inch thick concrete housekeeping pad that extends a minimum of 3 inches past the equipment footprint on both ends and the front for surface-mounted panelboards installed within 3 inches of the floor.
C. Provide filler plates for unused spaces in panelboards.
D. Provide typed circuit directory and nameplate for each panelboard. Revise directory to reflect circuiting changes required to balance phase loads.
E. Provide five 1 inch spare conduits out of each flush-mounted panelboard to an accessible location above ceiling. Identify each as SPARE.
F. Measure steady state load currents at each panelboard feeder and rearrange circuits as required to balance the phase loads to within 10 percent maximum imbalance. Maintain proper phasing for multiwire branch circuits.
G. Provide nameplate indicating panelboard equipment designation for each panelboard.

END OF SECTION

SECTION 262701 - ELECTRICAL SERVICE ENTRANCE

PART 1 GENERAL
1.01 PRE-INSTALLATION MEETING: Convene with utility company one month prior to commencing work to review and coordinate all requirements and details.

PART 2 PRODUCTS
2.01 INSTRUMENT TRANSFORMER CABINET: Sheet metal cabinet with hinged door, provisions for locking and sealing, and conforming to all utility company requirements; size as required by utility company.
2.02 METER SOCKET: Furnished by utility company or the Electrical Contractor as specified by the utility company.
2.03 UTILITY TRANSFORMER PAD: Prefabricated precast concrete or cast-in-place transformer pad sized as required by the utility company. Construct in strict conformance with the utility company standards.
2.04 OTHER COMPONENTS: Provide all conduits, boxes, accessories, and components as required by utility company for a complete, functional, and safe installation.

PART 3 EXECUTION
3.01 PREPARATION
A. Arrange with utility company to obtain permanent electric service.
3.02 INSTALLATION
A. Install weatherhead, transformer pad, instrument transformer cabinets, and meter socket as required by utility company.
B. Comply with all utility company metering, installation, and service requirements; utility company requirements supersede any requirements indicated on the Drawings or within the Specifications.

END OF SECTION

SECTION 262717 - EQUIPMENT WIRING

PART 1 GENERAL
1.01 COORDINATION WITH OTHER TRADES
A. Meet with all other trades before commencing any work and obtain and review shop drawings, product data, manufacturer's wiring diagrams, and manufacturer's instructions for equipment furnished under other Sections.
1. Determine all equipment connection locations and requirements and verify that proper power supply is available prior to subcontractor's ordering equipment.
2. Calculate the available fault current at any equipment required to carry a short-circuit current rating (SCCR) and communicate the minimum SCCR required to the contractor supplying the equipment prior to the equipment being ordered.
3. Sequence rough-in of electrical connections to coordinate with installation of equipment.
4. Sequence electrical connections to coordinate with start-up of equipment.
B. Verify and coordinate all requirements and installation details of all materials and equipment prior to rough-in.
C. Verify proper voltage, phase, and current rating of power supply and immediately report any discrepancies.
D. Responsibility for verification of proper power supply voltage and any damage resulting from incorrect connections shall rest with this Contractor.
E. Any conflicts arising from lack of coordination shall be this Contractor's responsibility.

PART 2 PRODUCTS
2.01 CORDS
A. Description: Multi-conductor flexible cord Type SO for dry and damp locations or Type SOW in wet locations.
B. Conductor Quantity: As required for the load served; include identified equipment grounding conductor.
C. Conductor Insulation Rating: As required for the voltage of the load served.
D. Conductor Ampacity: No less than the rating of the overcurrent protection device protecting the circuit.
2.02 CORD CAPS: Match cord cap to receptacle configuration at outlet provided for equipment.
2.03 OTHER MATERIALS: Provide all disconnect switches, wiring devices, conduit, wire and cable, and boxes required.

PART 3 EXECUTION
3.01 ELECTRICAL CONNECTIONS
A. Make electrical connections in accordance with equipment manufacturer's instructions.
B. Make conduit connections to equipment using flexible conduit. Use liquidtight flexible conduit with watertight connectors in damp or wet locations.
C. Connect heat producing equipment using wire and cable with insulation suitable for temperatures encountered.
D. Provide receptacle outlet to accommodate connection with attachment plug.
E. Provide cord and cap where field-supplied attachment plug is required.
F. Install suitable strain-relief clamps and fittings for cord connections at outlet boxes and equipment connection boxes.
G. Install disconnect switches, controllers, control stations, and control devices to complete equipment wiring requirements.
H. Install terminal block jumpers to complete equipment wiring requirements.
I. Install interconnecting conduit and wiring between devices and equipment to complete equipment wiring requirements.
J. Cut and seal conduit openings in freezer and cooler walls, floors, and ceilings where applicable.

END OF SECTION

SECTION 262726 - WIRING DEVICES

PART 1 GENERAL
1.01 PREPARATION: Contact the Architect to determine colors of all wiring devices, cover plates, and carpet and tile flanges, locations where stainless steel cover plates are required, and locations where carpet and tile flanges are required.

PART 2 PRODUCTS
2.01 RECEPTACLES
A. All Receptacles:
1. Color as selected by Architect.
2. Provide tamper-resistant receptacles where denoted "TR" on the Drawings and otherwise required.
3. Provide ground-fault circuit interrupter receptacles where denoted "GFCI" on the Drawings and otherwise required.
4. Provide receptacles with factory-applied permanent controlled receptacle marking where denoted "CR" on the Drawings and where controlled by automatic shutoff controls.
a. Field-applied controlled receptacle markings, such as those made by a label maker, are not acceptable.
5. Provide NEMA receptacle indicated with one Type A and one Type C USB port where denoted "USB" on the Drawings.
6. Provide identified weather-resistant receptacles for receptacles installed outdoors.
7. NEMA 5-15R unless indicated otherwise.
B. Standard NEMA 5-15R Duplex: Hubbell #BR15 unless indicated otherwise.
C. Standard NEMA 5-20R Duplex: Hubbell #BR20 unless indicated otherwise.
D. Interior GFCI Duplex: Hubbell #GF20 unless indicated otherwise.
1. Provide GFCI receptacles with audible alarm when the receptacle serves a sump pump.
E. Exterior GFCI Duplex: Hubbell #GFTR20 unless indicated otherwise.
F. Isolated Ground Duplex: Hubbell #IG20CR unless indicated otherwise.
G. Surge Protection Receptacles: Hubbell #HBL5362SA unless indicated otherwise.
H. Clock Hanger Receptacles: Hubbell #HBL5235 unless indicated otherwise.
I. Other NEMA Configurations: As required by the load served.
2.02 FACELESS GFCI: Hubbell #GFBFST20; color as selected by Architect.
2.03 MULTI-OUTLET ASSEMBLY: Wiremold Plugmold 2000 Series with receptacles at 6 inches on center unless indicated otherwise. Provide all fittings required for a complete installation. Coordinate device and channel finish color with the Architect.
2.04 WALL SWITCHES
A. All Switches:
1. Color as selected by Architect.
2. Horsepower rated when used as motor disconnecting means.
B. Single Pole Toggle: Hubbell #1221 unless indicated otherwise.
C. Three-Way Toggle: Hubbell #1223 unless indicated otherwise.
D. Four-Way Toggle: Hubbell #1224 unless indicated otherwise.
E. Single Pole Toggle with Pilot Light: Hubbell #HBL1221PLC unless indicated otherwise.
F. Single Pole Keyed: Hubbell #HBL1221L unless indicated otherwise.
G. Three-Way Keyed: Hubbell #HBL1223L unless indicated otherwise.
H. Four-Way Keyed: Hubbell #HBL1224L unless indicated otherwise.
2.05 WALLBOX DIMMERS
A. All Wallbox Dimmers: Color as selected by Architect.
B. LED Dimmers:
1. All LED Dimmers: Dimmer utilized shall be tested and listed by the LED manufacturer as a compatible dimmer.
2. 0-10 Volt Dimmers:
a. Up to 16 Amps: Lutron Maestro #MA-PRO with Lutron #GRX-TVI power interface unless indicated otherwise.
3. Phase Control:
a. 120 Volt Lighting Up to 250 Watts: Lutron Maestro #MA-PRO unless indicated otherwise.
b. 120 Volt Lighting Between 250 and 1920 Watts: Lutron Maestro #MA-PRO with Lutron #PHPM-PA-120-WH power interface unless indicated otherwise.
c. 277 Volt Lighting Up to 4432 Watts: Lutron Maestro #MA-PRO with Lutron #PHPM-PA-DV-WH power interface unless indicated otherwise.
C. Electronic Low Voltage Dimmers:
1. 120 Volt Lighting Up to 500 Watts: Lutron Maestro #MA-PRO unless indicated otherwise.
2. 120 Volt Lighting Between 500 and 1920 Watts: Lutron Maestro #MA-PRO with Lutron #PHPM-PA-120-WH power interface unless indicated otherwise.
3. 277 Volt Lighting Up to 4432 Watts: Lutron Maestro #MA-PRO with Lutron #PHPM-PA-DV-WH power interface unless indicated otherwise.
D. Magnetic Low Voltage Dimmers:
1. 120 Volt Lighting Up to 300 Watts: Lutron Maestro #MA-PRO unless indicated otherwise.
2. 120 Volt Lighting Between 300 and 1920 Watts: Lutron Maestro #MA-PRO with Lutron #PHPM-PA-120-WH power interface unless indicated otherwise.
3. 277 Volt Lighting Up to 4432 Watts: Lutron Maestro #MA-PRO with Lutron #PHPM-PA-DV-WH power interface unless indicated otherwise.
E. Incandescent Dimmers:
1. Up to 500 Watts: Lutron Maestro #MA-PRO unless indicated otherwise.
2. Between 500 and 1920 Watts: Lutron Maestro # MA-PRO with Lutron #PHPM-PA-120-WH power interface unless indicated otherwise.
F. Fluorescent Dimmers:
1. 0-10 Volt Dimmers:
a. Up to 16 Amps: Lutron Maestro #MAF-PRO with Lutron #GRX-TVI power interface unless indicated otherwise.
2. 3-Wire Dimmers:
a. 120 Volt Lighting: Lutron Maestro #MA-PRO with Lutron #PHPM-3F-120-WH power interface unless indicated otherwise.
b. 277 Volt Lighting: Lutron Maestro #MA-PRO with Lutron #PHPM-3F-DV-WH power interface unless indicated otherwise.
3. 2-Wire Dimmers:
a. 120 Volt Lighting, Up to 3.3 Amps: Lutron Maestro #MA-PRO unless indicated otherwise.
2.06 ABOVE-FLOOR SERVICE FITTINGS: Hubbell #SC3098A housing with plates as required for the wiring device installed within unless indicated otherwise.
2.07 POKE-THROUGH FITTINGS: Wiremold Evolution 6AT series unless indicated otherwise with wiring devices indicated; color as selected by Architect.
2.08 POWERPOLES: Wiremold AMDTP series unless indicated otherwise with wiring devices indicated. Provide lengths, device covers, ceiling trim plates, and mounting foot as required for a complete installation.
2.09 COVER PLATES
A. All Cover Plates:
1. Color and material as selected by Architect.
2. Provide cover plates appropriate for the wiring devices installed within the box.
a. Use combination plates when wiring devices are ganged together.
B. Wall Plates:
1. Provide standard-size nylon wall plates unless indicated otherwise; mid-size or jumbo wall plates are not permitted.
2. Provide stainless steel coverplates where requested by the Architect.
3. Provide galvanized steel cover plates on outlet boxes and junction boxes located in unfinished areas, above accessible ceilings, and on surface mounted outlets.
4. Provide gasketed, cast metal, hinged cover plates for all exterior locations, where denoted "WP" on the Drawings, and where otherwise required.
5. Provide weatherproof while-in-use covers which are listed and identified as "extra-duty" for all receptacles installed in wet locations.
C. Floor Box Cover Plates:
1. Flush Floor Boxes:
a. Carpet and Tile Flanges: Wiremold Omnibox Series for metal floor boxes and Wiremold Modulink 880MP2 Series for nonmetallic floor boxes; with number of gangs as required for the floor box.
b. Receptacle Cover Plates: Wiremold Omnibox Series for metal floor boxes and Wiremold Modulink 880MP2 Series for nonmetallic floor boxes; with flip lids unless indicated otherwise.
c. Communications Cover Plates: Wiremold Omnibox Series for metal floor boxes and Wiremold Modulink 880MP2 Series for nonmetallic floor boxes; combination concentric threaded plug with 1-inch inner plug unless indicated otherwise.
d. Hardwired Connection Cover Plates: Wiremold Omnibox Series for metal floor boxes and Wiremold Modulink 880MP2 Series for nonmetallic floor boxes; combination concentric threaded plug with 3/4-inch inner plug unless indicated otherwise.
2. Recessed Floor Boxes:
a. Internal Brackets: As required for the wiring devices installed within.
b. Cover Assemblies: Cutout cover type to accommodate carpet or tile insert; flanged or flangeless as selected by the Architect.
3. Wood Floor Boxes:
a. Carpet and Tile Flanges: Wiremold 880W Series for metal floor boxes and Wiremold WMFB Series for nonmetallic floor boxes; with number of gangs as required for the floor box.
b. Receptacle Cover Plates: Wiremold 880W Series for metal floor boxes and Wiremold WMFB Series for nonmetallic floor boxes; with flip lids unless indicated otherwise.
c. Communications Cover Plates: Wiremold 880W Series for metal floor boxes and Wiremold WMFB Series for nonmetallic floor boxes; combination concentric threaded plug with 1-inch inner plug unless indicated otherwise.
d. Hardwired Connection Cover Plates: Wiremold 880W Series for metal floor boxes and Wiremold WMFB Series for nonmetallic floor boxes; combination concentric threaded plug with 3/4-inch inner plug unless indicated otherwise.

PART 3 EXECUTION
3.01 EXAMINATION: Verify that outlet boxes are installed at proper heights and that openings are neatly cut and will be completely covered by the coverplates or flanges.
3.02 PREPARATION
A. Provide extension rings to bring wall-mounted outlet boxes flush with finished surface.
B. Adjust floor boxes to bring floor boxes flush with finished floor.
3.03 MOUNTING HEIGHTS
A. General: All mounting heights are to the centerline of the outlet box.
B. Receptacles:
1. Install receptacles at 18 inches above finished floor unless indicated otherwise.
2. Install receptacles at countertops at the lesser of 44 inches above finished floor or 3 inches above any sidesplashes or backsplashes unless indicated otherwise.
C. Wall Switches: Install wall switches including wallbox dimmers, wall switch occupancy sensors, and low voltage switches associated with programmable relay panels and room controllers at 46 inches above finished floor unless indicated otherwise.
D. Telecommunications Outlets:
1. Install telecommunications outlets including telephone, data, and television outlets 18 inches above finished floor unless indicated otherwise.
2. Install telephone outlets for side-reach and forward-reach wall telephone 46 inches above finished floor unless indicated otherwise.
E. Modify mounting heights in masonry walls as required to locate the outlet box at the joint in the masonry unit to avoid multiple or split-cut masonry units.
3.04 INSTALLATION
A. Install wall switches with OFF position down.
B. Install receptacles vertically with ground pin on bottom unless indicated otherwise.
C. Ground-Fault Circuit Interrupter (GFCI) Receptacles:
1. Provide a separate GFCI receptacle for every instance where denoted "GFCI" on the Drawings and otherwise required by Code; do not GFCI-protect receptacles from the load side of an upstream GFCI receptacle.
2. Install all GFCI receptacles in a readily accessible location.
a. Provide faceless GFCI device in a readily accessible location when the receptacle will not be readily accessible and connect receptacle to load side of faceless GFCI.
D. Wallbox Dimmers:
1. Install wallbox dimmers to achieve full rating; do not break heatsink fins off.
2. Install power interfaces in concealed accessible location.
3. Provide a separate neutral conductor for each branch circuit serving wallbox dimmers; do not connect wallbox dimmers to multiwire branch circuits.
4. Provide all control wiring and communications cabling including all 0-10V control wiring, whether or not shown on the Drawings, per manufacturer's recommendations and as required for a complete and operational system.
E. Install wiring devices in outlet boxes and connect wiring device grounding terminal to branch circuit equipment grounding conductor.
F. Connect wiring devices by wrapping conductor around screw terminal; do not use back-wired push-in terminals.
G. Install cover plates on all outlet boxes including blank outlets.
H. Use flat-head screws, clips, and straps to fasten multi-outlet assembly channel to surfaces and use suitable insulating bushings and inserts at connections to outlets and corner fittings.

END OF SECTION

SECTION 262813 - FUSES

PART 1 GENERAL - NOT USED

PART 2 PRODUCTS
2.01 FUSES:
A. Up to 600 Amps: Dual-element time-delay Class RK1 unless indicated otherwise or otherwise required for the switch in which the fuse is installed.
B. Greater than 600 Amps: Dual-element time-delay Class L unless indicated otherwise indicated otherwise or otherwise required for the switch in which the fuse is installed.
C. Site Lighting: Class CC with in-line fuseholder.

PART 3 EXECUTION
3.01 INSTALLATION
A. Install fuses with label oriented such that manufacturer, type, and size are easily read.

END OF SECTION

SECTION 262818 - ENCLOSED SWITCHES

PART 1 GENERAL - NOT USED

PART 2 PRODUCTS
2.01 SAFETY SWITCHES
A. 240 Volt Class: Square D Class 3130 general duty unless indicated otherwise.
B. 600 Volt Class: Square D Class 3110 heavy duty unless indicated otherwise.
C. Voltage, Phase, and Current Ratings: As indicated or otherwise required.
D. Fuse Clips: Class R cartridge fuse clips where fuses are installed.
E. Enclosure: Manufacturer's standard enclosure suitable for the environment in which the switch is installed.
F. Accessories: Provide grounding kit for all enclosed switches.
2.02 BOX COVER UNITS: Bussmann #SSU unless indicated otherwise.
2.03 ENCLOSED SWITCHES SERVING ELEVATOR CONTROLLERS
A. Provide Bussmann Power Module Switch for each elevator controller unless indicated otherwise with the following:
1. Voltage rating, amp rating, and number of poles as required for the elevator.
2. 120 volt shunt trip.
3. Control power terminal block.
4. Ground lug.
5. Class J fuseholders.
6. Control power transformer with fused primary and 120 volt fused secondary.
7. Three-pole double-throw (3PDT) 10 amp, 120 volt fire safety interface relay with 120 volt coil.
8. Green pilot light to indicate ON.
9. Two normally open mechanically interlocked auxiliary contacts.
10. Two normally closed mechanically interlocked auxiliary contacts.
11. Three-pole fire alarm voltage monitoring relay to monitor shunt trip voltage.
12. Manufacturer's standard enclosure suitable for the environment in which the switch is installed.

PART 3 EXECUTION
3.01 INSTALLATION
A. All Enclosed Switches:
1. Install in locations that provide all working space required by NFPA 70.
2. Install 5 feet to the operating handle.
3. Install fuses in fusible disconnect switches.
4. Provide nameplate indicating equipment designation, NEMA fuse class, and fuse size installed.
B. Enclosed Switches Serving Elevator Controllers:
1. Coordinate all requirements with the elevator manufacturer prior to ordering and rough-in.
2. Install within 24 inches of the latch (strike) side of the door to the machine room regardless of location show on the Drawings.
3. Coordinate all fuse ratings with the elevator manufacturer.
4. Connect auxiliary contacts to battery lowering accessory per elevator manufacturer's recommendations.
5. Wire the auxiliary contacts per the manufacturer's recommendations to prevent signaling the fire alarm system when the switch is manually opened.
6. Coordinate connection of auxiliary contacts and fire safety interface to the fire alarm system with the contractor installing the fire alarm system.

END OF SECTION

SECTION 265100 - INTERIOR LIGHTING

PART 1 GENERAL
1.01 QUALITY ASSURANCE
A. Verify all ceiling systems for proper coordination of luminaires and accessories including any drywall frames, bar hangers, flanges, trim rings, etc. required for a complete, finished installation.
B. Provide only luminaires that are listed for the environment in which they are installed.
1. Luminaires shall carry damp location and/or wet location ratings as required.
2. Luminaires shall be insulated ceiling (IC) rated when recessed into insulated ceilings; coordinate locations of all insulated ceilings with the Architectural plans.
C. Coordinate exact locations of all luminaires with the Architectural Reflected Ceiling Plan(s); luminaire locations on the Architectural Reflected Ceiling Plan(s) take precedence over locations indicated on the electrical lighting plans.
D. Coordinate mounting heights of all wall-mounted luminaires with the Architect prior to rough-in.
E. Confirm all luminaire and accessory finishes with the Architect prior to ordering.
F. Coordinate luminaire dimensions with the wall and/or ceiling thickness prior to ordering.
G. Coordinate mounting location, number of faces, and directional arrows of exit signs as required to mark paths of egress to the satisfaction of the Authority Having Jurisdiction.

PART 2 PRODUCTS
2.01 LUMINAIRES
A. Provide as indicated on the Drawings.
B. The acceptability of any substitute fixtures lies solely with the Architect and Engineer.
C. The specified luminaire shall be provided at no additional cost where a substitute fixture is not accepted by the Architect or Engineer.
2.02 NON-DIMMING BALLASTS, TRANSFORMERS, AND DRIVERS
A. Low Voltage Transformers:
1. Description: Electronic or magnetic low voltage transformer as required for and compatible with the associated luminaires.
2. Primary Voltage: Coordinate with the circuit(s) serving the luminaires.
3. Secondary Voltage: As required for the associated luminaires.
4. Power Rating: As required for the total wattage of the luminaires served plus a minimum of 25 percent.
B. LED Drivers: As required for and compatible with the associated LED module.
2.03 DIMMING BALLASTS AND DRIVERS
A. All Dimming Ballasts and Drivers:
1. Provide appropriate dimming ballasts/drivers in all fluorescent and LED luminaires controlled by wallbox dimmer switches or dimming systems whether or not specifically indicated within the specified luminaire's catalog number.
2. All dimming ballasts/drivers shall be compatible with associated wallbox dimmer switches or centralized dimming system control units.
3. Dimming Range: 100 percent to 5 percent.
4. Voltage: Universal (120 through 277 volts).
5. Power Factor: Greater than 0.95.
6. Total Harmonic Distortion: Less than 10 percent.
7. Sound Level Rating: Class A.
B. LED Dimming Drivers: Advance Xitanium series or equal.
2.04 EMERGENCY POWER SUPPLIES
A. Provide appropriate emergency battery in all fluorescent and LED luminaires indicated as emergency fixtures whether or not specifically indicated within the specified luminaire's catalog number.
1. Battery Type: Sealed nickel calcium (NiCad) with 7-year, minimum, life expectancy.
2. Illumination Time: 90 minutes minimum.
3. Voltage: Universal (120 through 277 volts).
4. Test Switch: Two-wire with LED indicator.
5. Lamp Operation: Two-lamp operation for luminaries equipped with more than one lamp.
6. Minimum Initial Illumination Rating:
a. Luminaires with LEDs:
1. Not less than 50 percent of the luminaire's lumen rating for luminaires rated 2000 lumens or less.
2. 20 watt minimum power rating for luminaires rated at greater than 2000 lumens.
2.05 LAMPS
A. LED: As indicated on the Drawings.
2.06 ACCESSORIES
A. Provide all supplementary items, appurtenances, and devices incidental to or necessary for a sound, secure, and complete installation including, but not limited to:
1. Dimming ballasts for fluorescent and LED luminaires that are served by wallbox dimmer switches or dimming systems.
2. Emergency power supplies for fluorescent and LED luminaires indicated as emergency fixtures.
3. Multiple ballasts for fluorescent luminaires where indicated to have multi-level switching.
4. All trim rings, extensions, stems, canopies, cords, pendant feeds, connectors, bar hangers, fittings, hold-down clips, alignment clips/joiners, etc. necessary to mount the luminaires in a proper and approved method.
5. All necessary low-voltage transformers, connectors, mounting hardware, etc. for a complete low-voltage lighting system.
6. All necessary connectors, feeds, end caps, pendants, mounting hardware, fittings, etc. for a complete track lighting system.
7. Chain hangers for all suspended luminaires in unfinished areas.
8. Drywall frames for all linear fluorescent luminaires that are recessed into drywall ceilings.
9. Wireguards for any wall-mounted luminaires, including emergency lighting unit equipment and exit signs, located in gymnasiums or where otherwise exposed to physical damage.
10. Fire-rated luminaire covers (tents) for luminaires installed in fire-rated ceiling assemblies; coordinate locations of fire-rated ceiling assemblies with the Architectural plans.
11. Any seismic bracing and/or restraints required by the Authority Having Jurisdiction.

PART 3 EXECUTION
3.01 INSTALLATION
A. Install luminaires in locations shown on the Architectural Reflected Ceiling Plan(s); luminaire locations on the Architectural Reflected Ceiling Plan(s) take precedence over locations indicated on the electrical lighting plans.
B. Install luminaires plumb and level and align with building lines and adjacent luminaires.
C. Support all luminaires completely independent of any suspended ceiling systems.
D. Connect luminaires to branch circuit.
1. Circuit all exit signs, emergency lights, and nightlights ahead of any switching.
2. Do not use multiwire branch circuits for circuits serving emergency lighting equipment such as emergency batteries or emergency lighting unit equipment.
E. Provide all additional emergency lighting and/or exit signs determined necessary by the Authority Having Jurisdiction during inspections.
F. Install all remote ballasts, low voltage transformers, and drivers in concealed accessible areas in close proximity to the associated luminaires and connect to the associated luminaires per the manufacturer's recommendations, including adjusting wire sizes for voltage drop if required.
G. Prevent insulation from being installed above or within 3 inches away from any luminaire that is recessed into an insulated ceiling but is not insulated ceiling (IC) rated.
H. Install fire-rated luminaire covers (tents) for luminaires installed in fire-rated ceiling assemblies; provide fire-rated boxes around luminaires when fire-rated luminaire covers (tents) are not available.
I. Burn-in all fluorescent lamps controlled by wallbox dimmers or dimming systems for a minimum of 100 hours prior to connecting to dimmer.
3.02 CLOSEOUT
A. Replace any lamps and ballasts that expire before the Owner's acceptance of the project.
B. Aim and adjust all luminaires to provide illumination levels, focusing, and distribution patterns to the Owner's satisfaction.

END OF SECTION

SECTION 265600 - EXTERIOR LIGHTING

PART 1 GENERAL
1.01 ADMINISTRATIVE REQUIREMENTS: Furnish bolt templates and pole mounting accessories to installer of pole foundations.
1.02 QUALITY ASSURANCE
A. Provide only luminaires that are listed for the environment in which they are installed; luminaires shall carry damp location and/or wet location ratings as required.
B. Confirm all luminaire and accessory finishes with the Architect prior to ordering.
C. Coordinate exact locations of all pole-mounted site lighting with the Civil Plan(s); luminaire locations on the Civil Plan(s) take precedence over locations indicated on the electrical plans.

PART 2 PRODUCTS
2.01 LUMINAIRES
A. Provide as indicated on the Drawings.
B. The acceptability of any substitute fixtures lies solely with the Architect and Engineer.
C. The specified luminaire shall be provided at no additional cost where a substitute fixture is not accepted by the Architect or Engineer.
2.02 NON-DIMMING BALLASTS, TRANSFORMERS, AND DRIVERS: See Section 265100 paragraph 2.02 and all subparagraphs.
2.03 LAMPS: See Section 265100 paragraph 2.03 and all subparagraphs.
2.04 POLES
A. Shape: As indicated on the Drawings.
B. Height: As indicated on the Drawings; provide hinged poles for poles located on top deck of parking structures.
C. Material: As indicated on the Drawings
D. Metal Gauge: As required to support the weight and effective projected area (EPA) of the luminaire and all associated mounting hardware at the design windspeed for the project.
E. Drilling: As required for the installed luminaires.
F. Handhole: Provide.
G. Fusing: Provide 20 amp in-line fuseholder with Class CC fuse located within handhole when luminaire is served by branch circuit rated greater than 20 amps.
H. Anchor Bolts: Provide as required for the pole.
I. Anchor Bolt Cover: Provide.
J. Receptacle: Provide NEMA 5-15R weatherproof GFCI duplex receptacle with weatherproof while-in-use cover when indicated.
1. Provide 300 volt-amp transformer with fused primary and fused secondary located within handhole to serve receptacle when the branch circuit serving the luminaire operates at a voltage other than 120 volts unless the plans indicate a separate 120 volt circuit serving the receptacle.
K. Supplemental Ground Electrode: Provide supplemental ground rod electrode at each pole.
2.05 ACCESSORIES
A. Provide all supplementary items, appurtenances, and devices incidental to or necessary for a sound, secure, and complete installation including, but not limited to:
1. Pole bases as indicated on the Drawings and as recommended by the pole manufacturer.
2. All mounting arms, tenons, stanchions, yokes, knuckles, ground lugs, etc. necessary to mount the luminaires in a proper and approved method.
3. House-side shields for pole-mounted luminaires installed along the perimeter of the property.
4. All necessary low-voltage transformers, connectors, mounting hardware, etc. for a complete low-voltage lighting system.

PART 3 EXECUTION
3.01 INSTALLATION
A. Install luminaires in locations shown; pole-mounted site lighting luminaire locations on the Civil Plan(s) take precedence over locations indicated on the electrical plans.
B. Install luminaires and poles plumb and level; provide shims or double nuts to adjust plumb.
C. Grout around each pole base.
D. Connect luminaires to branch circuit.
E. Provide supplementary grounding electrode at each pole.
F. Bond luminaires, metal accessories, and metal poles to branch circuit equipment grounding conductor.
3.02 CLOSEOUT
A. Replace any lamps and ballasts that expire before the Owner's acceptance of the project.
B. Aim and adjust all luminaires to provide illumination levels, focusing, and distribution patterns to the Owner's satisfaction.

END OF SECTION

SECTION 271005 - TELEPHONE AND DATA SYSTEMS

PART 1 GENERAL
1.01 PREPARATION
A. Coordinate all demarcation locations with the serving utility and/or the Landlord.
B. Hold meeting with the Owner prior to commencing work.
1. Determine Scope of Work and Division of Responsibility.
2. Determine quantities of phone drops and data drops are required at each outlet box.
3. Confirm all cabling, termination, cross-connection equipment, enclosure, and jack requirements.

PART 2 PRODUCTS
2.01 ENCLOSURES
A. Backboards: Provide 3/4 inch thick UL-labeled, fire-retardant, interior grade plywood; size as indicated on the Drawings.
B. Equipment Racks: Only if required pursuant to meeting with the Owner:
1. Wall-Mounted Racks: Chatsworth Products Standard Swing Gate series; 19 inches wide, depth as required for installed components, and height as required for installed components plus 50 percent.
2. Floor-Mounted Racks: Chatsworth Products 50120 QuadraRack series with vertical and horizontal cable management, top and bottom cable troughs, and grounding lug; 19 inches wide, 29 inches deep, and height as required for installed components plus 50 percent.
2.02 OUTLET BOXES
A. Wall: 4-square by 2-1/8 inch deep outlet box with single gang mud ring and cover plate unless indicated otherwise or otherwise required.
B. Floor: As indicated on the Drawings or within Section 260537 unless indicated otherwise or otherwise required.
C. Wall Plates:
1. Provide standard-size nylon blank wall plates unless indicated otherwise; color as selected by the Architect. Mid-size or jumbo wall plates are not permitted.
2. When cabling is to be provided by this Contractor, provide standard-size nylon modular keystone jack cover plates compatible with the associated modular keystone jacks and with appropriate number of jacks unless indicated otherwise; color as selected by the Architect.
2.03 PATHWAYS
A. All Pathways:
1. See Section 260534 for permitted conduit types.
2. Provide pullstring in each conduit.
B. Service Entrance: Conduit with extended radius sweeps; size as indicated or otherwise required.
C. Branch Wiring: Provide 3/4 inch minimum conduit from all outlet boxes to accessible ceiling space unless indicated otherwise.
2.04 COPPER CABLES, PLUGS, AND JACKS: Only if required pursuant to meeting with the Owner:
A. Data:
1. All Data Cabling: Unshielded twisted pair (UTP) Category 6A unless indicated otherwise or otherwise required.
2. Backbone (Riser) Cabling: Type CMR when installed in conduit and Type CMP when not installed in conduit; gray jacket unless indicated otherwise or otherwise required.
3. Horizontal Cabling: Type CM when installed in conduit and Type CMP when not installed in conduit; blue jacket unless indicated otherwise or otherwise required.
4. Plugs: Category 6A UTP non-keyed 8-wire modular plugs unless indicated otherwise or otherwise required.
5. Jacks: Category 6A UTP non-keyed 8-wire RJ45 modular keystone jack unless indicated otherwise or otherwise required; color as selected by the Owner.
B. Telephone:
1. All Telephone Cabling: Unshielded twisted pair (UTP) Category 3 unless indicated otherwise or otherwise required.
2. Horizontal Cabling: Type CM when installed in conduit and Type CMP when not installed in conduit; blue jacket unless indicated otherwise or otherwise required.
3. Plugs: Category 3 UTP non-keyed 8-wire modular plugs unless indicated otherwise or otherwise required.
4. Jacks: Category 3 UTP non-keyed 8-wire RJ45 modular keystone jack unless indicated otherwise or otherwise required; color as selected by the Owner.
2.05 CROSS-CONNECTION EQUIPMENT: Only if required pursuant to meeting with the Owner:
A. Connector Blocks for Category 3 Cabling: Type 66 insulation displacement connectors unless indicated otherwise or otherwise required with capacity sufficient for cables to be terminated plus 25 percent spare.
B. Connector Blocks for Category 5e Cabling: Type 110 insulation displacement connectors unless indicated otherwise or otherwise required with capacity sufficient for cables to be terminated plus 25 percent spare.
C. Patch Panels for Copper Cabling: Panduit DP5e series UTP patch panel unless indicated otherwise or otherwise required with quantity of ports sufficient for cables to be terminated plus 25 percent spare.
D. Patch Cords: Provide one Category 5e patch cord for each pair of patch panel ports.

PART 3 EXECUTION
3.01 INSTALLATION OF ENCLOSURES
A. Backboards: Install at locations indicated on the Drawings.
B. If required pursuant to meeting with the Owner:
1. Wall-Mounted Racks: Install to plywood backboard at locations directed by the Owner.
2. Floor-Mounted Racks: Permanently anchor to floor in accordance with manufacturer's recommendations at locations directed by the Owner, connect adjacent racks together, and remove interior side panels.
3.02 INSTALLATION OF OUTLET BOXES
A. Install in compliance with Section 260537.
B. Mounting Heights: See Section 262726.
3.03 INSTALLATION OF PATHWAYS
A. All Pathways:
1. Install all pathways with the following minimum clearances:
a. 48 inches from motors, generators, frequency converters, transformers, x-ray equipment, and uninterruptible power systems.
b. 12 inches from power conduits and cables and panelboards.
c. 5 inches from fluorescent and high frequency lighting fixtures.
d. 6 inches from flues, hot water pipes, and steam pipes.
B. Conduit:
1. Install conduit in compliance with Section 260534 unless indicated otherwise.
a. Do not install more than two 90 degree bends in a single horizontal cable run.
b. Leave pull cords in place where cables are not initially installed.
c. Under floor slabs, locate conduit at 12 inches minimum below vapor retarder and seal penetrations of vapor retarder around conduit.
2. Underground Service Entrance: Install conduit at least 18 inches below finish grade and encase in at least 3 inches thick concrete for at least 60 inches out from the building line.
C. Grounding and Bonding: Perform in accordance with ANSI/J-STD-607 and NFPA 70.
3.04 INSTALLATION OF CABLES, PLUGS, AND JACKS
A. Only if required pursuant to meeting with the Owner:
1. Install cables from outlet to cross-connection equipment as directed by the Owner.
2. Do not exceed 300 feet from outlet to switch.
3. Do not bend cable tighter than the greater of the manufacturer's recommended bend radius or 4 times the cable diameter.
4. Do not exceed the greater of the manufacturer's recommended cable pull tension or 25 pounds.
5. Use only lubricants approved by cable manufacturer when installing cables in conduit and do not chafe or damage outer jacket.
6. Install plugs and jacks as required.
7. Provide the following minimum extra length of cable, looped neatly:
a. At Patch Panels: 10 feet.
b. At Outlets: 12 inches.
8. Install labels complying with TIA/EIA-606 using coded identifiers:
a. Cables: Color coded labels on each end.
b. Outlets: Label each jack on its cover plate with a unique numerical identifier as to its type and function.
c. Patch Panels: Label each jack with a unique numerical identifier as to its type and function.
d. Patch Cords: Label with jack identifier corresponding to initial installation.
3.05 INSTALLATION OF CROSS-CONNECTION EQUIPMENT
A. Only if required pursuant to meeting with the Owner:
1. Install connector blocks at backboards as directed by the Owner.
2. Install patch panels in equipment racks as directed by the Owner.
3. Install labels complying with TIA/EIA-606 using coded identifiers:
a. Patch Panels: Label each jack with a unique numerical identifier as to its type and function.
b. Patch Cords: Label with jack identifier corresponding to initial installation.
3.06 TESTING
A. General: Comply with inspection and testing requirements of specified installation standards.
B. Visual Inspection:
1. Inspect cable jackets for certification markings.
2. Inspect cable terminations for color coded labels of proper type.
3. Inspect outlet plates and patch panels for complete labels.
4. Inspect patch cords for complete labels.
C. Testing of Copper Cabling and Associated Equipment:
1. Test backbone cables after termination but before cross-connection.
2. Test backbone cables for DC loop resistance, shorts, opens, intermittent faults, and polarity between connectors and between conductors and shield, if cable has overall shield.
3. Test operation of shorting bars in connection blocks.
4. Category 3 Backbone: Perform attenuation test.
5. Category 3 Links: Test each pair for short circuit continuity, short to ground, crosses, reversed polarity, operational and ring-back, and dial tone.
6. Category 5e/6 Backbone: Perform near end cross talk (NEXT) and attenuation tests.
7. Category 5e/6 Links: Perform tests for wire map, length, attenuation, NEXT, and propagation delay.
D. Final Testing: After all work is complete, including installation of telecommunications outlets, and telephone dial tone service is active, test each voice jack for dial tone.

END OF SECTION

Schnackel engineers
New York ■ Miami ■ Omaha ■ Los Angeles ■ Seattle ■ Honolulu
800-581-0963 www.schnackel.com

SE JOB#: 250720

COPYRIGHT 2024 KTGY GROUP INC. These plans and specifications are protected by United States copyright law and may not be used, reproduced, distributed, transmitted, displayed, or modified in any way without the prior written consent of KTGY Group, Inc. or the authorized copyright holder or licensee.

ktgy
17911 Von Karman Ave.
Suite 200
Irvine, CA 92614
ktgy.com
949.851.2133

ktgy Project Number
Contact DORINA WATSON
Email dwatson@ktgy.com
Senior Director DAVID SCHMITZ
Designer RUSSEL ROSALES

Developer
SEDC
23906 SOBOBA ROAD
SAN JACINTO, CA 92581

PHONE: (951) 663-2058

SOBOBA SOVOVATUM VILLAGE
PHASE-2
-
SAN JACINTO, CA

No.	DATE	DESCRIPTION

Client is responsible for notifying architect in writing for any discovered errors or omissions in the plans and specifications during construction of the project. Failure for Client to notify Architect of any known errors or omissions in the plans or specifications, and proceeding with constructing the portion of work shown in the plans or specifications containing known errors or omissions shall be a waiver by Client for any liability of Architect for such known errors or omissions. Client releases Architect for any liability for such portions of work, and Architect shall not be liable for any delay damages, change orders, repair costs, removal or demolition costs, or replacement of any such portions of work.

2026-05-26, ISSUED FOR BID

Sheet Name
ELECTRICAL SPECIFICATIONS

E3-12

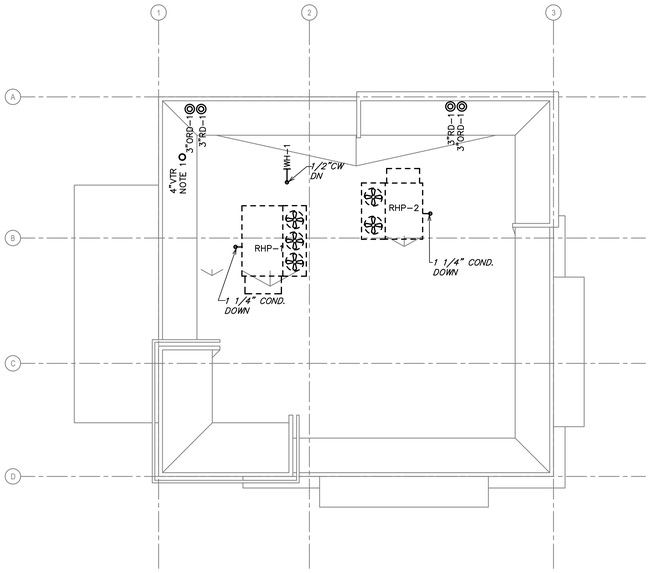

NORTH

PLUMBING ROOF PLAN | SCALE: 1/8"=1'-0" | 3

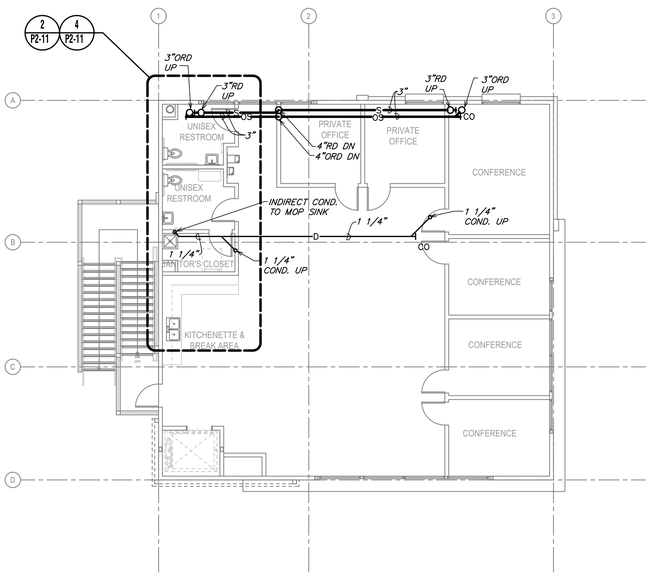

NORTH

PLUMBING FLOOR PLAN - SECOND FLOOR | SCALE: 1/8"=1'-0" | 1

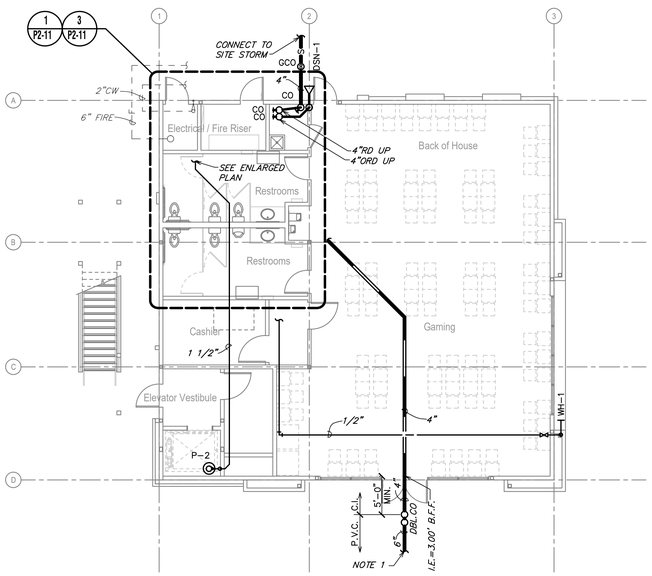

NORTH

PLUMBING FLOOR PLAN - FIRST FLOOR | SCALE: 1/8"=1'-0" | 1

GENERAL NOTES:

A. ALL WORK SHALL BE COMPLETED IN ACCORDANCE WITH ALL APPLICABLE GOVERNMENTAL AND LOCAL CODE REQUIREMENTS.
B. PROVIDE ACCESS PANELS AS REQUIRED TO ALLOW ACCESS TO VALVES, EQUIPMENT, ETC. LOCATED ABOVE INACCESSIBLE CEILINGS AND WALL CAVITIES.
D. ALL SANITARY LINES AND PLUMBING FIXTURES ON THE PROJECT SHALL HAVE AN APPROVED MEANS OF SEWAGE BACKFLOW PREVENTION. FIXTURE SPECIFIC BACKFLOW PREVENTION INCLUDING AIR GAPS AND VACUUM BREAKERS ARE AN ACCEPTABLE MEANS OF BACKFLOW PREVENTION.
E. PIPE SIZES INDICATED ON THE PLANS ARE MINIMUM. THE CONTRACTOR SHALL PROVIDE PIPE SIZES EQUAL TO OR GREATER THAN THE SPECIFIED SIZES. THE CONTRACTOR MAY INCREASE PIPE SIZES AS REQUIRED AT NO ADDITIONAL EXPENSE TO THE PROJECT.
F. REFER TO THE PLUMBING FIXTURE SCHEDULE FOR INDIVIDUAL PLUMBING FIXTURE CONNECTION SIZE REQUIREMENTS.
G. COORDINATE ALL SLAB PENETRATIONS WITH GENERAL CONTRACTOR PRIOR TO CONSTRUCTION. MAINTAIN A MINIMUM OF 2" CLEARANCE FROM THE EDGE OF THE SLAB OPENING TO ANY STRUCTURAL MEMBERS AND PIPES.
H. SLEEVE OR CORE-DRILL FLOOR SLABS, WALLS, ETC. AS REQUIRED FOR PIPING AND FIRE-STOP OPENING AROUND PIPE. VERIFY LOCATION OF STRUCTURAL BEAMS, JOISTS, ETC. BEFORE DRILLING.
I. PROVIDE INDIRECT DRAINAGE ON ALL KITCHEN EQUIPMENT PER LOCAL JURISDICTION REQUIREMENTS. REFER TO FOOD SERVICE PLANS FOR ADDITIONAL DRAINAGE REQUIREMENTS.
J. PROVIDE TEMPORARY COVERS, CAPS, OR PLUGS ON SANITARY SEWER SYSTEM THROUGHOUT THE DURATION OF CONSTRUCTION. RAG WADS, DUCT TAPE, OR OTHER SIMILAR METHODS OF TEMPORARY COVERS SHALL NOT BE UTILIZED. UPON COMPLETION OF CONSTRUCTION, COMPLETELY REMOVE ANY AND ALL OBSTRUCTIONS INSIDE THE ENTIRE SYSTEM BY SNAKING, RODING, OR JETTING THE SYSTEM IMMEDIATELY PRIOR TO PROJECT TURNOVER TO THE OWNER.
K. ALL BELOW GRADE SANITARY LINES SHALL BE A MINIMUM OF 2" OR IN ACCORDANCE WITH LOCAL CODE REQUIREMENTS.
L. SANITARY TEE FITTINGS SHALL NOT BE INSTALLED IN DRAIN, WASTE, AND VENT (DWV) SYSTEMS.
M. INSTALL SANITARY PIPING AT A SLOPE OF 1/4" PER FOOT. SANITARY PIPING 4" AND LARGER MAY BE SLOPED AT 1/8" PER FOOT, IF FIRST APPROVED BY THE AUTHORITY HAVING JURISDICTION.
N. INSTALL GREASE WASTE PIPING AT A SLOPE OF 1/4" PER FOOT.
O. ALL STORM PIPING SHALL BE INSTALLED AS HIGH AS POSSIBLE AND AS CLOSE TO THE BOTTOM OF ROOF DECKING AS POSSIBLE. THE STORM PIPING SHALL BE SLOPED AT 1/8" PER FOOT UNLESS NOTED OTHERWISE.
P. THE PLUMBING CONTRACTOR SHALL PROVIDE HEAT TRACING TAPE AND INSULATION AS REQUIRED FOR ALL PIPING INSTALLED WITHIN WALK-IN FREEZERS TO PREVENT PIPING FROM FREEZING. COORDINATE THE INSTALLATION OF THE HEAT TRACING WITH THE ELECTRICAL CONTRACTOR PRIOR TO INSTALLATION.
Q. ALL HANDICAPPED ACCESSIBLE WATER CLOSETS SHALL HAVE THE FLUSHING HANDLE ON THE WIDE SIDE OF THE HANDICAPPED ACCESSIBLE STALL AS REQUIRED BY ADA REQUIREMENTS.
R. ALL PUBLIC USE LAVATORY FAUCETS SHALL HAVE AN AUTOMATIC SAFETY WATER MIXING DEVICE IN ACCORDANCE WITH ANSI/ASSE 1017 OR 1070 AS APPLICABLE.
S. THE ENTIRE AREA UNDER CONSTRUCTION SHALL BE PROVIDED WITH A COMPLETE FIRE SPRINKLER SYSTEM IN ALL RESPECTS. RELOCATE/ADD NEW SPRINKLER DROPS TO EXISTING SYSTEMS WHERE REQUIRED TO PROVIDE COMPLETE COVERAGE THROUGHOUT THE AREA OF CONSTRUCTION. COORDINATE FIRE SPRINKLER PIPING AND HEAD LOCATIONS WITH ALL TRADES PRIOR TO FABRICATION AND/OR INSTALLATION. IF CONFLICTS OCCUR BETWEEN FIRE SPRINKLER PIPING/HEADS AND LIGHTS, DIFFUSERS, DUCTWORK, ETC., THE FIRE SPRINKLER PIPING/HEADS SHALL BE RELOCATED OR REROUTED AT NO ADDITIONAL EXPENSE TO THE PROJECT. AN ADEQUATE SUPPLY OF EXTRA PIPING AND FITTINGS SHALL BE MAINTAINED ON SITE TO ALLOW FOR FIELD MODIFICATIONS. PERFORM HYDRAULIC CALCULATIONS AS REQUIRED BY NFPA, LOCAL, STATE CODES, AND THE OWNER'S INSURANCE AGENCY. APPROVED SHOP DRAWINGS DO NOT PRECLUDE REROUTING IF SO REQUIRED BY THE ARCHITECT/ENGINEER.

PLUMBING NOTES:

1. SEE CIVIL PLANS FOR CONTINUATION.

LEGEND

- EXISTING
- NEW WORK
- NEW TO EXISTING CONNECTION

ktgy

17911 Von Karman Ave.
Suite 200
Irvine, CA 92614
ktgy.com
949.851.2133

ktgy Project Number

Contact	DORINA WATSON
Email	dwatson@ktgy.com
Senior Director	DAVID SCHMITZ
Designer	RUSSEL ROSALES

Developer
SEDC
23906 SOBOBA ROAD
SAN JACINTO, CA 92581

PHONE: (951) 663-2058

SOBOBA SOVOVATUM VILLAGE PHASE-2

SAN JACINTO, CA

No.	DATE	DESCRIPTION

Client is responsible for notifying architect in writing for any discovered errors or omissions in the plans and specifications during construction of the project. Failure for Client to notify Architect of any known errors or omissions in the plans or specifications, and proceeding with constructing the portion of work shown in the plans or specifications containing known errors or omissions shall be a waiver by Client for any liability of Architect for such known errors or omissions. Client releases Architect for any liability for such portions of work, and Architect shall not be liable for any delay damages, change orders, repair costs, removal or demolition costs, or replacement of any such portions of work.

2026-05-26, ISSUED FOR BID

Sheet Name
PLUMBING PLANS

P1-11

SE JOB#: 239710

COPYRIGHT 2024 KTGY GROUP INC. These plans and specifications are protected by United States copyright law and may not be used, reproduced, distributed, transmitted, displayed, or modified in any way without the prior written consent of KTGY Group, Inc. or the authorized copyright holder or licensee.

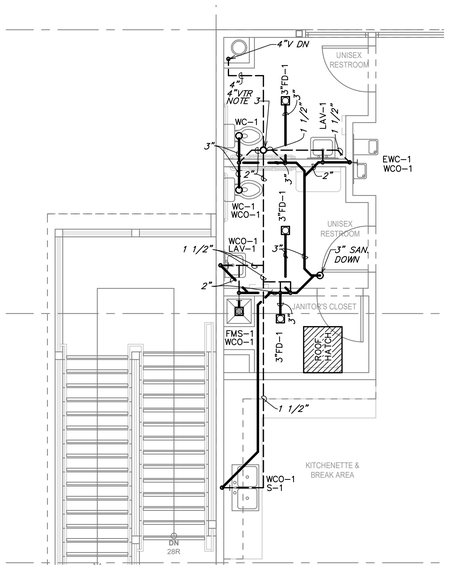

NORTH

ENLARGED DOMESTIC WATER PLUMBING PLAN SECOND FLOOR | SCALE: 1/4"=1'-0" | 4

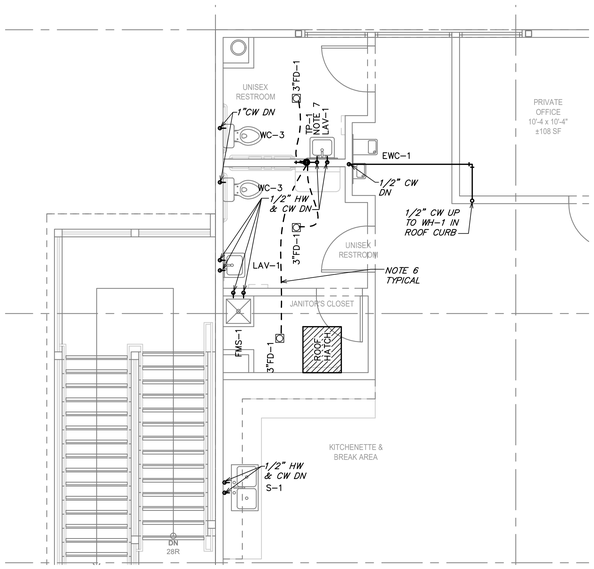

NORTH

ENLARGED DOMESTIC WATER PLUMBING PLAN SECOND FLOOR | SCALE: 1/4"=1'-0" | 2

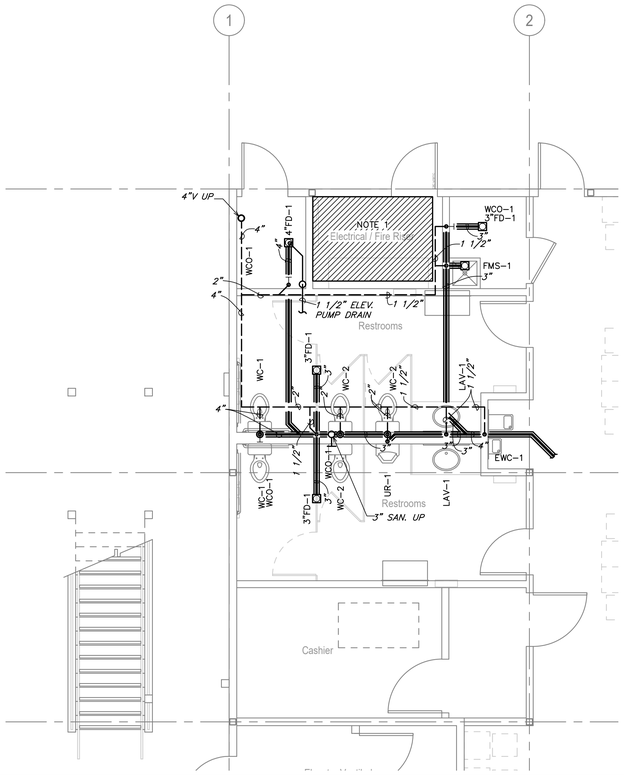

NORTH

ENLARGED SANITARY/VENT PLUMBING PLAN - FIRST FLOOR | SCALE: 1/4"=1'-0" | 3

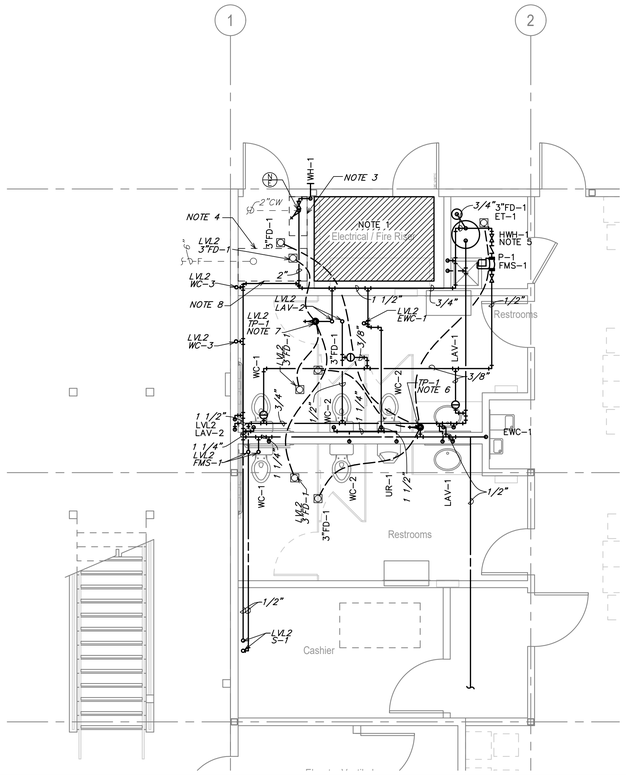

NORTH

ENLARGED DOMESTIC WATER PLUMBING PLAN - FIRST FLOOR | SCALE: 1/4"=1'-0" | 1

GENERAL NOTES:

A. ALL WORK SHALL BE COMPLETED IN ACCORDANCE WITH ALL APPLICABLE GOVERNMENTAL AND LOCAL CODE REQUIREMENTS.
B. PROVIDE ACCESS PANELS AS REQUIRED TO ALLOW ACCESS TO VALVES, EQUIPMENT, ETC. LOCATED ABOVE INACCESSIBLE CEILINGS AND WALL CAVITIES.
D. ALL SANITARY LINES AND PLUMBING FIXTURES ON THE PROJECT SHALL HAVE AN APPROVED MEANS OF SEWAGE BACKFLOW PREVENTION. FIXTURE SPECIFIC BACKFLOW PREVENTION INCLUDING AIR GAPS AND VACUUM BREAKERS ARE AN ACCEPTABLE MEANS OF BACKFLOW PREVENTION.
E. PIPE SIZES INDICATED ON THE PLANS ARE MINIMUM. THE CONTRACTOR SHALL PROVIDE PIPE SIZES EQUAL TO OR GREATER THAN THE SPECIFIED SIZES. THE CONTRACTOR MAY INCREASE PIPE SIZES AS REQUIRED AT NO ADDITIONAL EXPENSE TO THE PROJECT.
F. REFER TO THE PLUMBING FIXTURE SCHEDULE FOR INDIVIDUAL PLUMBING FIXTURE CONNECTION SIZE REQUIREMENTS.
G. COORDINATE ALL SLAB PENETRATIONS WITH GENERAL CONTRACTOR PRIOR TO CONSTRUCTION. MAINTAIN A MINIMUM OF 2" CLEARANCE FROM THE EDGE OF THE SLAB OPENING TO ANY STRUCTURAL MEMBERS AND PIPES.
H. SLEEVE OR CORE-DRILL FLOOR SLABS, WALLS, ETC. AS REQUIRED FOR PIPING AND FIRE-STOP OPENING AROUND PIPE. VERIFY LOCATION OF STRUCTURAL BEAMS, JOISTS, ETC. BEFORE DRILLING.
I. PROVIDE INDIRECT DRAINAGE ON ALL KITCHEN EQUIPMENT PER LOCAL JURISDICTION REQUIREMENTS. REFER TO FOOD SERVICE PLANS FOR ADDITIONAL DRAINAGE REQUIREMENTS.
J. PROVIDE TEMPORARY COVERS, CAPS, OR PLUGS ON SANITARY SEWER SYSTEM THROUGHOUT THE DURATION OF CONSTRUCTION. RAG WADS, DUCT TAPE, OR OTHER SIMILAR METHODS OF TEMPORARY COVERS SHALL NOT BE UTILIZED. UPON COMPLETION OF CONSTRUCTION, COMPLETELY REMOVE ANY AND ALL OBSTRUCTIONS INSIDE THE ENTIRE SYSTEM BY SNAKING, RODING, OR JETTING THE SYSTEM IMMEDIATELY PRIOR TO PROJECT TURNOVER TO THE OWNER.
K. ALL BELOW GRADE SANITARY LINES SHALL BE A MINIMUM OF 2" OR IN ACCORDANCE WITH LOCAL CODE REQUIREMENTS.
L. SANITARY TEE FITTINGS SHALL NOT BE INSTALLED IN DRAIN, WASTE, AND VENT (DWV) SYSTEMS.
M. INSTALL SANITARY PIPING AT A SLOPE OF 1/4" PER FOOT. SANITARY PIPING 4" AND LARGER MAY BE SLOPED AT 1/8" PER FOOT, IF FIRST APPROVED BY THE AUTHORITY HAVING JURISDICTION.
N. INSTALL GREASE WASTE PIPING AT A SLOPE OF 1/4" PER FOOT.
O. ALL STORM PIPING SHALL BE INSTALLED AS HIGH AS POSSIBLE AND AS CLOSE TO THE BOTTOM OF ROOF DECKING AS POSSIBLE. THE STORM PIPING SHALL BE SLOPED AT 1/8" PER FOOT UNLESS NOTED OTHERWISE.
P. THE PLUMBING CONTRACTOR SHALL PROVIDE HEAT TRACING TAPE AND INSULATION AS REQUIRED FOR ALL PIPING INSTALLED WITHIN WALK-IN FREEZERS TO PREVENT PIPING FROM FREEZING. COORDINATE THE INSTALLATION OF THE HEAT TRACING WITH THE ELECTRICAL CONTRACTOR PRIOR TO INSTALLATION.
Q. ALL HANDICAPPED ACCESSIBLE WATER CLOSETS SHALL HAVE THE FLUSHING HANDLE ON THE WIDE SIDE OF THE HANDICAPPED ACCESSIBLE STALL AS REQUIRED BY ADA REQUIREMENTS.
R. ALL PUBLIC USE LAVATORY FAUCETS SHALL HAVE AN AUTOMATIC SAFETY WATER MIXING DEVICE IN ACCORDANCE WITH ANSI/ASSE 1017 OR 1070 AS APPLICABLE.
S. THE ENTIRE AREA UNDER CONSTRUCTION SHALL BE PROVIDED WITH A COMPLETE FIRE SPRINKLER SYSTEM IN ALL RESPECTS. RELOCATE/ADD NEW SPRINKLER DROPS TO EXISTING SYSTEMS WHERE REQUIRED TO PROVIDE COMPLETE COVERAGE THROUGHOUT THE AREA OF CONSTRUCTION. COORDINATE FIRE SPRINKLER PIPING AND HEAD LOCATIONS WITH ALL TRADES PRIOR TO FABRICATION AND/OR INSTALLATION. IF CONFLICTS OCCUR BETWEEN FIRE SPRINKLER PIPING/HEADS AND LIGHTS, DIFFUSERS, DUCTWORK, ETC., THE FIRE SPRINKLER PIPING/HEADS SHALL BE RELOCATED OR REROUTED AT NO ADDITIONAL EXPENSE TO THE PROJECT. AN ADEQUATE SUPPLY OF EXTRA PIPING AND FITTINGS SHALL BE MAINTAINED ON SITE TO ALLOW FOR FIELD MODIFICATIONS. PERFORM HYDRAULIC CALCULATIONS AS REQUIRED BY NFPA, LOCAL, STATE CODES, AND THE OWNER'S INSURANCE AGENCY. APPROVED SHOP DRAWINGS DO NOT PRECLUDE REROUTING IF SO REQUIRED BY THE ARCHITECT/ENGINEER.

PLUMBING NOTES:

1. THIS SPACE IS RESERVED FOR ELECTRICAL EQUIPMENT. NO PIPING SHALL PASS BELOW, ABOVE, OR AROUND ELECTRICAL EQUIPMENT. PROVIDE CODE REQUIRED MINIMUM CLEARANCE ABOVE ELECTRICAL EQUIPMENT ACCESS SPACE.
2. SEE CIVIL PLANS FOR CONTINUATION.
3. THIS SPACE IS RESERVED FOR THE DOMESTIC WATER SERVICE ENTRANCE. THE WATER SERVICE SHALL COMPLY WITH ALL STATE AND LOCAL REQUIREMENTS AND SHALL BE INSTALLED IN ACCORDANCE WITH THE MANUFACTURER'S RECOMMENDATIONS. FURNISH AND INSTALL A PRESSURE REDUCING VALVE ON WATER SERVICE SET TO 80 PSI WHEN THE CITY WATER PRESSURE EXCEEDS 80 PSI.
4. THIS SPACE IS RESERVED FOR THE FIRE SPRINKLER SERVICE. THE FIRE SERVICE ENTRANCE SHALL COMPLY WITH ALL STATE, LOCAL, AND NFPA REQUIREMENTS AND SHALL BE INSTALLED IN ACCORDANCE WITH LOCAL AHJ AND MANUFACTURER'S RECOMMENDATIONS.
5. FURNISH AND INSTALL WATER HEATER AND EXPANSION TANK ON SHELF AS INDICATED ON THE PLANS. SET THE DISCHARGE TEMPERATURE TO 125 DEG. F. REFER TO ARCHITECTURAL PLANS FOR WATER HEATER SHELF REQUIREMENTS AND EXACT LOCATION. PIPE WATER HEATER RELIEF AND SECONDARY DRAIN PAN DISCHARGE TO THE NEAREST MOP SINK OR FLOOR DRAIN BELOW THE WATER HEATER. PROVIDE A CODE APPROVED AIR GAP ON THE DISCHARGE OF THE WATER HEATER RELIEF AND SECONDARY DRAIN. REFER TO DETAILS SHEET FOR ADDITIONAL INFORMATION.
6. 1/2" FLEXIBLE CONTINUOUS TYPE "K" COPPER TUBING BELOW GRADE FROM TRAP PRIMER TO FLOOR DRAIN. NO FITTINGS OR SPLICES ARE ALLOWED BELOW GRADE.
7. INSTALL TRAP PRIMER PER MANUFACTURER'S REQUIREMENTS. COORDINATE EXACT

LEGEND
EXISTING
NEW WORK
NEW TO EXISTING CONNECTION

Schnackel engineers
Mechanical • Electrical • Plumbing • Fire Protection • Fire Alarm • Structural
949-581-6563 www.schnackel.com

ktgy
17911 Von Karman Ave.
Suite 200
Irvine, CA 92614
ktgy.com
949.851.2133

ktgy Project Number
Contact DORINA WATSON
Email dwatson@ktgy.com
Senior Director DAVID SCHMITZ
Designer RUSSEL ROSALES

Developer
SEDC
23906 SOBOBA ROAD
SAN JACINTO, CA 92581
PHONE: (951) 663-2058

SOBOBA SOVOVATUM VILLAGE PHASE-2
SAN JACINTO, CA

No.	DATE	DESCRIPTION

Client is responsible for notifying architect in writing for any discovered errors or omissions in the plans and specifications during construction of the project. Failure for Client to notify Architect of any known errors or omissions in the plans or specifications, and proceeding with constructing the portion of work shown in the plans or specifications containing known errors or omissions shall be a waiver by Client for any liability of Architect for such known errors or omissions. Client releases Architect for any liability for such portions of work, and Architect shall not be liable for any delay damages, change orders, repair costs, removal or demolition costs, or replacement of any such portions of work.

2026-05-26, ISSUED FOR BID

Sheet Name
ENLARGED PLUMBING PLANS

P2-11

SE JOB#: 239730

COPYRIGHT 2024 KTGY GROUP INC. These plans and specifications are protected by United States copyright law and may not be used, reproduced, distributed, transmitted, displayed, or modified in any way without the prior written consent of KTGY Group, Inc. or the authorized copyright holder or licensee.

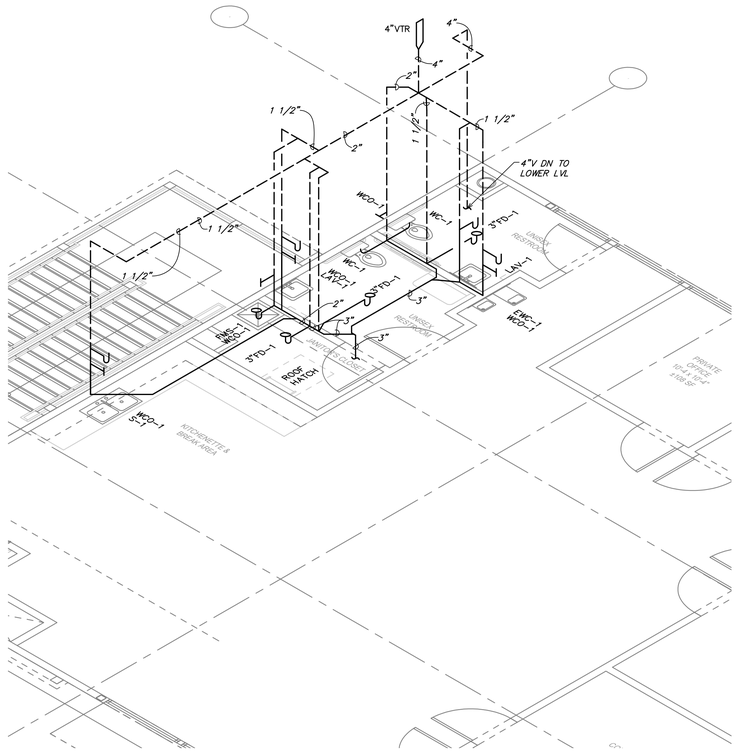

SANITARY & VENT RISER DIAGRAM SECOND FLOOR | SCALE: NTS | 4

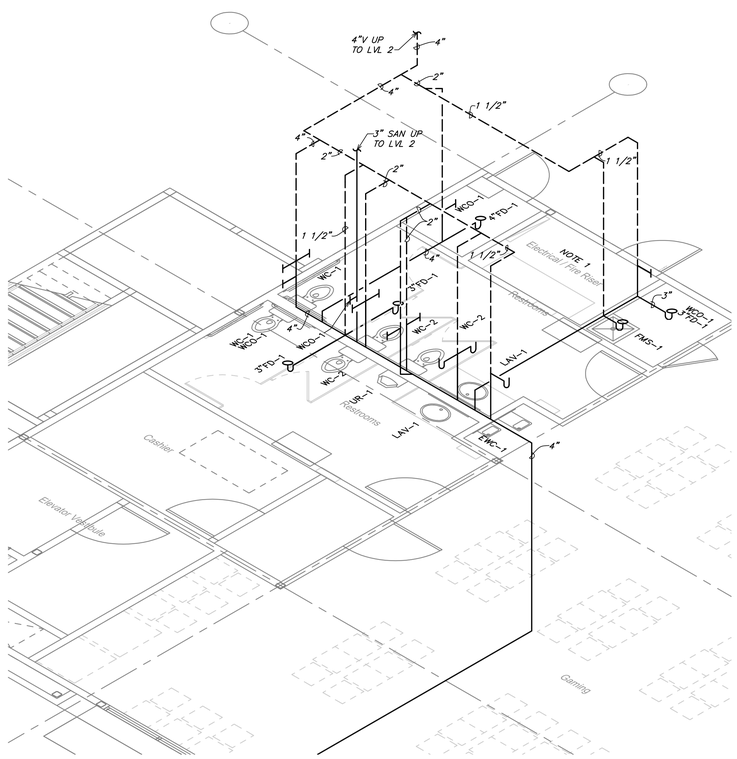

SANITARY & VENT RISER DIAGRAM- FIRST FLOOR | SCALE: NTS | 3

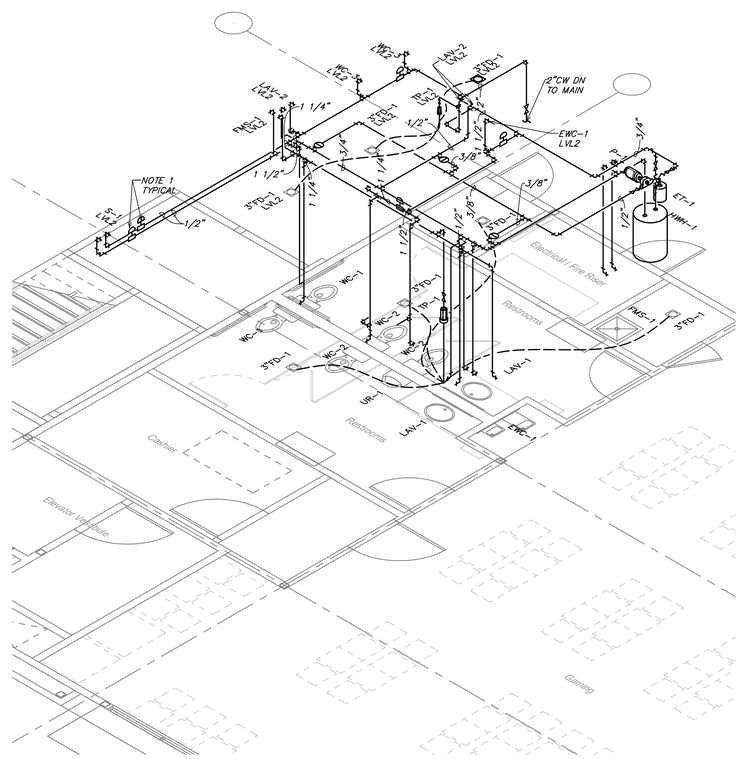

DOMESTIC WATER RISER DIAGRAM | SCALE: NTS | 1

GENERAL NOTES:

A. ALL WORK SHALL BE COMPLETED IN ACCORDANCE WITH ALL APPLICABLE GOVERNMENTAL AND LOCAL CODE REQUIREMENTS.
B. PROVIDE ACCESS PANELS AS REQUIRED TO ALLOW ACCESS TO VALVES, EQUIPMENT, ETC. LOCATED ABOVE INACCESSIBLE CEILINGS AND WALL CAVITIES.
D. ALL SANITARY LINES AND PLUMBING FIXTURES ON THE PROJECT SHALL HAVE AN APPROVED MEANS OF SEWAGE BACKFLOW PREVENTION. FIXTURE SPECIFIC BACKFLOW PREVENTION INCLUDING AIR GAPS AND VACUUM BREAKERS ARE AN ACCEPTABLE MEANS OF BACKFLOW PREVENTION.
E. PIPE SIZES INDICATED ON THE PLANS ARE MINIMUM. THE CONTRACTOR SHALL PROVIDE PIPE SIZES EQUAL TO OR GREATER THAN THE SPECIFIED SIZES. THE CONTRACTOR MAY INCREASE PIPE SIZES AS REQUIRED AT NO ADDITIONAL EXPENSE TO THE PROJECT.
F. REFER TO THE PLUMBING FIXTURE SCHEDULE FOR INDIVIDUAL PLUMBING FIXTURE CONNECTION SIZE REQUIREMENTS.
G. COORDINATE ALL SLAB PENETRATIONS WITH GENERAL CONTRACTOR PRIOR TO CONSTRUCTION. MAINTAIN A MINIMUM OF 2" CLEARANCE FROM THE EDGE OF THE SLAB OPENING TO ANY STRUCTURAL MEMBERS AND PIPES.
H. SLEEVE OR CORE-DRILL FLOOR SLABS, WALLS, ETC. AS REQUIRED FOR PIPING AND FIRE-STOP OPENING AROUND PIPE. VERIFY LOCATION OF STRUCTURAL BEAMS, JOISTS, ETC. BEFORE DRILLING.
I. PROVIDE INDIRECT DRAINAGE ON ALL KITCHEN EQUIPMENT PER LOCAL JURISDICTION REQUIREMENTS. REFER TO FOOD SERVICE PLANS FOR ADDITIONAL DRAINAGE REQUIREMENTS.
J. PROVIDE TEMPORARY COVERS, CAPS, OR PLUGS ON SANITARY SEWER SYSTEM THROUGHOUT THE DURATION OF CONSTRUCTION. RAG WADS, DUCT TAPE, OR OTHER SIMILAR METHODS OF TEMPORARY COVERS SHALL NOT BE UTILIZED. UPON COMPLETION OF CONSTRUCTION, COMPLETELY REMOVE ANY AND ALL OBSTRUCTIONS INSIDE THE ENTIRE SYSTEM BY SNAKING, RODING, OR JETTING THE SYSTEM IMMEDIATELY PRIOR TO PROJECT TURNOVER TO THE OWNER.
K. ALL BELOW GRADE SANITARY LINES SHALL BE A MINIMUM OF 2" OR IN ACCORDANCE WITH LOCAL CODE REQUIREMENTS.
L. SANITARY TEE FITTINGS SHALL NOT BE INSTALLED IN DRAIN, WASTE, AND VENT (DWV) SYSTEMS.
M. INSTALL SANITARY PIPING AT A SLOPE OF 1/4" PER FOOT. SANITARY PIPING 4" AND LARGER MAY BE SLOPED AT 1/8" PER FOOT, IF FIRST APPROVED BY THE AUTHORITY HAVING JURISDICTION.
N. INSTALL GREASE WASTE PIPING AT A SLOPE OF 1/4" PER FOOT.
O. ALL STORM PIPING SHALL BE INSTALLED AS HIGH AS POSSIBLE AND AS CLOSE TO THE BOTTOM OF ROOF DECKING AS POSSIBLE. THE STORM PIPING SHALL BE SLOPED AT 1/8" PER FOOT UNLESS NOTED OTHERWISE.
P. THE PLUMBING CONTRACTOR SHALL PROVIDE HEAT TRACING TAPE AND INSULATION AS REQUIRED FOR ALL PIPING INSTALLED WITHIN WALK-IN FREEZERS TO PREVENT PIPING FROM FREEZING. COORDINATE THE INSTALLATION OF THE HEAT TRACING WITH THE ELECTRICAL CONTRACTOR PRIOR TO INSTALLATION.
Q. ALL HANDICAPPED ACCESSIBLE WATER CLOSETS SHALL HAVE THE FLUSHING HANDLE ON THE WIDE SIDE OF THE HANDICAPPED ACCESSIBLE STALL AS REQUIRED BY ADA REQUIREMENTS.
R. ALL PUBLIC USE LAVATORY FAUCETS SHALL HAVE AN AUTOMATIC SAFETY WATER MIXING DEVICE IN ACCORDANCE WITH ANSI/ASSE 1017 OR 1070 AS APPLICABLE.
S. THE ENTIRE AREA UNDER CONSTRUCTION SHALL BE PROVIDED WITH A COMPLETE FIRE SPRINKLER SYSTEM IN ALL RESPECTS. RELOCATE/ADD NEW SPRINKLER DROPS TO EXISTING SYSTEMS WHERE REQUIRED TO PROVIDE COMPLETE COVERAGE THROUGHOUT THE AREA OF CONSTRUCTION. COORDINATE FIRE SPRINKLER PIPING AND HEAD LOCATIONS WITH ALL TRADES PRIOR TO FABRICATION AND/OR INSTALLATION. IF CONFLICTS OCCUR BETWEEN FIRE SPRINKLER PIPING/HEADS AND LIGHTS, DIFFUSERS, DUCTWORK, ETC., THE FIRE SPRINKLER PIPING/HEADS SHALL BE RELOCATED OR REROUTED AT NO ADDITIONAL EXPENSE TO THE PROJECT. AN ADEQUATE SUPPLY OF EXTRA PIPING AND FITTINGS SHALL BE MAINTAINED ON SITE TO ALLOW FOR FIELD MODIFICATIONS. PERFORM HYDRAULIC CALCULATIONS AS REQUIRED BY NFPA, LOCAL, STATE CODES, AND THE OWNER'S INSURANCE AGENCY. APPROVED SHOP DRAWINGS DO NOT PRECLUDE REROUTING IF SO REQUIRED BY THE ARCHITECT/ENGINEER.

PLUMBING NOTES:

1. WATER HAMMER ARRESTORS SHALL BE SIZED AND INSTALLED IN ACCORDANCE WITH THE MANUFACTURER'S RECOMMENDATIONS. THE LOCATIONS INDICATED ARE FOR REFERENCE ONLY.

ktgy

17911 Von Karman Ave.
Suite 200
Irvine, CA 92614
ktgy.com
949.851.2133

ktgy Project Number

Contact	DORINA WATSON
Email	dwatson@ktgy.com
Senior Director	DAVID SCHMITZ
Designer	RUSSEL ROSALES

Developer
SEDC
23906 SOBOBA ROAD
SAN JACINTO, CA 92581

PHONE: (951) 663-2058

SOBOBA SOVOVATUM VILLAGE PHASE-2

SAN JACINTO, CA

No.	DATE	DESCRIPTION

Client is responsible for notifying architect in writing for any discovered errors or omissions in the plans and specifications during construction of the project. Failure for Client to notify Architect of any known errors or omissions in the plans or specifications, and proceeding with constructing the portion of work shown in the plans or specifications containing known errors or omissions shall be a waiver by Client for any liability of Architect for such known errors or omissions. Client releases Architect for any liability for such portions of work, and Architect shall not be liable for any delay damages, change orders, repair costs, removal or demolition costs, or replacement of any such portions of work.

Sheet Name
PLUMBING RISER DIAGRAMS

2026-05-26, ISSUED FOR BID

Schnackel engineers
Civil • Land Development • Structural • Low Voltage • Electrical • Solar
800-397-6963 www.schnackel.com

P2-12

SE JOB#: 230720

COPYRIGHT 2024 KTGY GROUP INC. These plans and specifications are protected by United States copyright law and may not be used, reproduced, distributed, transmitted, displayed, or modified in any way without the prior written consent of KTGY Group, Inc. or the authorized copyright holder or licensee.

PIPING MATERIAL LEGEND

Sanitary Sewer Piping, Buried Within 5 Feet (1500 mm) of Building:

1. Cast Iron Pipe: ASTM A 74 extra heavy weight.
   a. Fittings: Cast iron.
   b. Joints: Hub-and-spigot, CISPI HSN compression type with ASTM C 564 neoprene gaskets or lead and oakum.
2. Cast Iron Pipe: CISPI 301, hubless.
   a. Fittings: Cast iron.
   b. Joints: CISPI 310, neoprene gasket and stainless steel clamp and shield assemblies.
3. PVC Pipe: ASTM D 2665 or ASTM D 3034.(Where permitted by local code.)
   a. Fittings: PVC.
   b. Joints: Solvent welded, with ASTM D 2564 solvent cement.

Sanitary Sewer Piping, Above Grade:

1. Cast Iron Pipe: ASTM A 74, service weight.
   a. Fittings: Cast iron.
   b. Joint Seals: ASTM C 564 neoprene gaskets, or lead and oakum.
2. Cast Iron Pipe: CISPI 301, hubless, service weight.
   a. Fittings: Cast iron.
   b. Joints: CISPI 310, neoprene gaskets and stainless steel clamp and shield assemblies.
3. Copper Tube: ASTM B 306, DWV.
   a. Fittings: ASME B16.29, wrought copper, or ASME B16.32, solvent.
   b. Joints: ASTM B 32, alloy Sn50 solder.
4. PVC Pipe: ASTM D 2665. (Where permitted by local code and not located in plenum return air ceilings.)
   a. Fittings: PVC.
   b. Joints: Solvent welded, with ASTM D 2564 solvent cement.

Water Piping, Above Grade:

1. Copper Tube: ASTM B 88 (ASTM B 88M), Type L (B), Drawn (H).
   a. Fittings: ASME B16.18, cast copper alloy or ASME B16.22, wrought copper and bronze.
   b. Joints: ASTM B 32, alloy lead free for all pipe 2" and smaller, sil/fos or Phasco for all 2 1/2" and larger and for all below grade locations solder. All flux shall be non corrosive type.

Natural Gas Piping, Above Grade

1. Steel Pipe: ASTM A 53/A 53M Schedule 40 black.
   a. Fittings: ASME B16.3, malleable iron, or ASTM A 234/A 234M, wrought steel welding type.
   b. Joints: NFPA 54, threaded or welded to ASME B31.1.
2. Copper Tube: ASTM B 88 (ASTM B 88M), Type K (A) or L (B) annealed.
   a. Fittings: ASME B16.26, cast bronze.
   b. Joints: Flared.

Equipment Drains and Overflows

1. Steel Pipe: ASTM A 53/A 53M, Schedule 40 galvanized.
   a. Fittings: Galvanized cast iron, or ASME B16.3 malleable iron.
   b. Joints: Threaded, or grooved mechanical couplings.
2. Copper Tube: ASTM B 88 (ASTM B 88M), Type M (C), drawn.
   a. Fittings: ASME B16.26, cast brass, or ASME B16.22 solder wrought copper.
   b. Joints: Solder, lead free, ASTM B 32, HB alloy (95–5 tin–antimony), or tin and silver.
3. PVC Pipe (Not permitted in plenum return ceilings or any tenant lease spaces.): ASTM D 1785, Schedule 40, or ASTM D 2241, SDR 21 or 26.
   a. Fittings: ASTM D 2466 or D2467, PVC.
   b. Joints: Solvent welded.
4. ABS Pipe (Not permitted in plenum return ceilings or any tenant lease spaces.): ASTM D 2680 or D 2751.
   a. Fittings: ASTM D 2751.
   b. Joints: Solvent welded with ASTM D 2235 cement.

Storm Water Piping, Buried Within 5 Feet (1500 mm) of Building:

1. Cast Iron Pipe: ASTM A 74 service weight.
   a. Fittings: Cast iron.
   b. Joint Seals: ASTM C 564 neoprene gaskets or lead and oakum.
2. PVC Pipe: ASTM D 2665 or ASTM D 3034.(Where permitted by local code.)
   a. Fittings: PVC.
   b. Joints: Solvent welded, with ASTM D 2564 solvent cement.

Storm Water Piping, Buried Beyond 5 Feet (1500 mm) of Building:

1. Vitrified Clay Pipe: ASTM C 700 standard strength.
   a. Fittings: Clay.
   b. Joints: Bell-and-spigot, with ASTM C 425 compression joint device of either lead and oakum, neoprene gasket system, or neoprene gasket and clamp system.
2. PVC Pipe: ASTM D 3034 SDR35. (Where permitted by local code.)
   a. Fittings: PVC.
   b. Joints: Push-on, using ASTM F 477 elastomeric gaskets.

Storm Water Piping, Above Grade:

1. Cast Iron Pipe: ASTM A 74 service weight.
   a. Fittings: Cast iron.
   b. Joint Seals: ASTM C 564 neoprene gaskets or lead and oakum.
2. PVC Pipe: ASTM D 2665 or ASTM D 3034.(Where permitted by local code.)
   a. Fittings: PVC.
   b. Joints: Solvent welded, with ASTM D 2564 solvent cement.

PLUMBING SYMBOL LEGEND

SYMBOL	DESCRIPTION	SYMBOL	DESCRIPTION
	SANITARY DRAIN ABOVEGROUND		CLEAN OUT
	SANITARY DRAIN BELOWGROUND		GRADE CLEAN OUT
—GW—	GREASE WASTE ABOVEGROUND		WALL CLEAN OUT
—GW—	GREASE WASTE BELOWGROUND	N.I.C.	NOT IN CONTRACT
—AW—	ACID WASTE ABOVEGROUND	VTR	VENT THROUGH ROOF
—AW—	ACID WASTE BELOWGROUND		BALL VALVE
	VENT LINE		CHECK VALVE
—AV—	ACID VENT		PRESSURE REGULATING VALVE (PRV)
—WAGD—	WASTE ANESTHESIA GAS DISPOSAL		
—S—	STORM DRAIN ABOVEGROUND		GAS COCK
—S—	STORM DRAIN BELOWGROUND		PRESSURE REGULATING VALVE (PRV) AND GAS COCK
—OS—	OVERFLOW STORM DRAIN		
	COLD WATER (CW)		MIXING VALVE
	HOT WATER (HW)		GAS COCK
	HOT WATER CIRCULATING (HWC)		VALVE IN RISE
-140°—	HOT WATER 140°		AUTOMATIC BALANCING VALVE
-140°—	HOT WATER CIRCULATING 140°		RUNNING TRAP
—T—	TEMPERED WATER	HB	HOSE BIBB
—T—	TEMPERED WATER CIRCULATING	WH	WALL HYDRANT
—CS—	COLD SOFT WATER	FH	FIRE HYDRANT
—HS—	HOT SOFT WATER	V.C.P.	VITRIFIED CLAY PIPE
—HS—	HOT SOFT WATER CIRCULATING	C.I.	CAST IRON
—F—	FIRE LINE	I.E.	INVERT ELEVATION
—G—	GAS LINE	B.F.F.	BELOW FINISHED FLOOR
—A—	COMPRESSED AIR LINE		PLUMBING RISER NUMBER
—V—	VACUUM LINE		
—OX—	OXYGEN LINE		DOWNSPOUT NOZZLE
—D—	CONDENSATE DRAIN	RD	ROOF DRAIN/OVERFLOW ROOF DRAIN

VALVE SCHEDULE

TYPE	MANUFACTURER	THREADED/FLANGED PIPING 2" AND SMALLER	THREADED/FLANGED PIPING 2-1/2" AND LARGER	SOLDERED/BRAZED PIPING 3" AND SMALLER
GATE	JENKINS	47-C	651-C	1242-C
	MILWAUKEE	148	2885	115
	STOCKHAM	B-100	G-623	B-108
BALL	JENKINS	901A	---	902A
	MILWAUKEE	BA100	---	BA150
	STOCKHAM	S-216-BR1-R-T	---	S-216-BR1-R-S
CHECK	JENKINS	4092	624-C	4093
	MILWAUKEE	509	F2974	1509
	STOCKHAM	B-319	G-931	B-309
AUTOMATIC BALANCING	HAYS	N.A.	N.A.	2517LF - 0.5 GPM

NOTES:
1. VALVES MATERIAL (BODIES, DISC, GASKETS, LININGS, PACKINGS, ETC.) SHALL BE APPROVED FOR THE SERVICE IN WHICH THEY ARE INSTALLED.
2. VALVES SHALL BE LINE SIZE UNLESS OTHERWISE INDICATED.
3. VALVES SHALL BE EQUIPPED WITH ACCESSORIES AS REQUIRED.

NONRESIDENTIAL MANDATORY MEASURES
WATER REDUCTION FIXTURE FLOW RATES

PLUMBING FIXTURES	MAXIMUM ALLOWABLE FLOW RATE
SHOWERHEADS	2.0 GPM @ 80 PSI
LAVATORY FAUCETS, RESIDENTIAL	1.2 GPM @ 60 PSI
LAVATORY FAUCETS, NONRESIDENTIAL	0.5 GPM @ 60 PSI
KITCHEN FAUCETS	1.8 GPM @ 60 PSI
WASH FOUNTAINS	1.8 GPM FOR EVERY 20" RIM SPACE @ 60 PSI
METERING FAUCETS	0.20 GALLONS/CYCLE
METERING FAUCETS FOR WASH FOUNTAIN	0.2 GPM FOR EVERY 20" RIM SPACE @ 60 PSI
GRAVITY TANK TYPE WATER CLOSETS	1.28 GALLONS/FLUSH
FLUSHOMETER TANK WATER CLOSETS	1.28 GALLONS/FLUSH
FLUSHOMETER VALVE WATER CLOSETS	1.28 GALLONS/FLUSH
URINALS	0.125 GALLONS/FLUSH
CLOTHES WASHERS	ENERGY-STAR CERTIFIED
DISHWASHERS	ENERGY-STAR CERTIFIED

ELECTRICAL WATER HEATERS

MARK	LOCATION	KW	GAL/HR @ 90 DEGREE RISE	ELECTRICAL VOLTS	ELECTRICAL PHASE	STORAGE CAP	MANUFACTURER	REMARKS
HWH-1	MOP SINK	4.5	20	208	1	30 GALLONS	AO SMITH	DEL-30

EXPANSION TANKS

MARK	LOCATION	SERVES	MAXIMUM ACCEPTANCE (GALLONS)	WORKING PRESS (PSI)	SIZE (APPROX)	MANUFACTURER	REMARKS
ET-1	STORAGE	DOM. HW	0.9	150	8"øx14"	AMTROL	MODEL ST-5

*NOTE: CONTRACTOR SHALL ADJUST PRE-CHARGE OF EXPANSION TANK TO EQUAL INCOMING WATER PRESSURE PRIOR TO INSTALLATION.

PUMPS

MARK	LOCATION	SERVICE	GPM	HEAD (FT.)	MOTOR DATA HP	MOTOR DATA VOLTS	MOTOR DATA PH	MOTOR DATA CYC.	RPM	TYPE	MFR.	REMARKS
P-1	STORAGE	DOM. HW	1.5	10.5	1/6	115	1	60	2950	INLINE	B & G	MODEL: NBF-25*
P-2	ELEVATOR	GND. WTR.	50	27.5	1/2	115	1	60	3450	SUMBERS.	WEIL	1456-OSS

*PROVIDE MANUFACTURER RECOMMENDED AQUASTAT.

PLUMBING FIXTURE SCHEDULE

Mark		DESCRIPTION	FINAL CONNECTIONS HW	CW	V	W	MANUFACTURER MODEL NUMBER
WC-1	WATER CLOSETS	FLUSH VALVE OPERATION, VITREOUS CHINA, FULLY GLAZED TRAPWAY, 1.28 GALLONS PER FLUSH, WALL MOUNTED, BACK OUTLET, 1 1/2" TOP INLET SPUD, 25 PSI MINIMUM WORKING PRESSURE, COLOR: WHITE	–	1"	1 1/2"	3"	AMERICAN STANDARD: AFWALL 2257.001
	WATER CLOSET FLUSHING SYSTEM	QUIET, EXPOSED, HIGH EFFICIENCY FLUSH VALVE, INFRARED PROXIMITY SENSOR, BATTERY POWERED, VANDAL RESISTANT CHROME PLATED CAST BRASS VALVE BODY, MANUAL OVER RIDE BUTTON, REVERSIBLE COVER, INTEGRAL VACUUM BREAKER, ADJUSTABLE TAILPIECE, SPUD COUPLING, FLANGE FOR TOP SPUD CONNECTION, VANDAL RESISTANT CONTROL STOP WITH INTERNAL SIPHON-GUARD PROTECTION					ZURN: ZTS6200EV
	WATER CLOSET SEAT	COMMERCIAL DUTY, EXTRA HEAVY WEIGHT, INJECTION MOLDED SOLID PLASTIC, LARGE MOLDED BUMPERS, STAINLESS STEEL POSTS, SELF-SUSTAINING, CONCEALED STAINLESS STEEL CHECK HINGE HOLDING SEAT IN ANY RAISED POSITION UP TO 11 DEG. BEYOND VERTICAL, OPEN FRONT, LESS COVER, COLOR: WHITE					CHURCH: 9500SSCT
	WATER CLOSET CARRIER	ADJUSTABLE HEIGHT, HORIZONTAL SIPHON JET WATER CLOSET, HUB & SPIGOT CONNECTIONS, COATED CAST IRON, RIGHT OR LEFT HAND MAIN FITTING, 2" VENT CONNECTION, ADJUSTABLE GASKETED FACE PLATE, UNIVERSAL FLOOR MOUNTED FOOT SUPPORTS, CORROSION RESISTANT ADJUSTABLE ABS COUPLING WITH INTEGRAL TEST CAP, FIXTURE BOLTS, TRIM, STUD PROTECTORS, REAR ANCHOR TIE DOWN, BONDED GASKET, ABOVE FLOOR SANITARY DISCHARGE, STANDARD WEIGHT CLASS, STANDARD WALL SYSTEM, STANDARD WALL SYSTEM					ZURN: Z1203-N
	MOUNTING HEIGHT	MOUNTING HEIGHT 16"					
WC-2	WATER CLOSETS	FLUSH VALVE OPERATION, VITREOUS CHINA, FULLY GLAZED TRAPWAY, 1.28 GALLONS PER FLUSH, WALL MOUNTED, BACK OUTLET, 1 1/2" TOP INLET SPUD, 25 PSI MINIMUM WORKING PRESSURE, COLOR: WHITE	–	1"	1 1/2"	3"	AMERICAN STANDARD: AFWALL 2257.001
	WATER CLOSET FLUSHING SYSTEM	QUIET, EXPOSED, HIGH EFFICIENCY FLUSH VALVE, INFRARED PROXIMITY SENSOR, BATTERY POWERED, VANDAL RESISTANT CHROME PLATED CAST BRASS VALVE BODY, MANUAL OVER RIDE BUTTON, REVERSIBLE COVER, INTEGRAL VACUUM BREAKER, ADJUSTABLE TAILPIECE, SPUD COUPLING, FLANGE FOR TOP SPUD CONNECTION, VANDAL RESISTANT CONTROL STOP WITH INTERNAL SIPHON-GUARD PROTECTION					ZURN: ZTS6200EV
	WATER CLOSET SEAT	COMMERCIAL DUTY, EXTRA HEAVY WEIGHT, INJECTION MOLDED SOLID PLASTIC, LARGE MOLDED BUMPERS, STAINLESS STEEL POSTS, SELF-SUSTAINING, CONCEALED STAINLESS STEEL CHECK HINGE HOLDING SEAT IN ANY RAISED POSITION UP TO 11 DEG. BEYOND VERTICAL, OPEN FRONT, LESS COVER, COLOR: WHITE					CHURCH: 9500SSCT
	WATER CLOSET CARRIER	ADJUSTABLE HEIGHT, HORIZONTAL SIPHON JET WATER CLOSET, HUB & SPIGOT CONNECTIONS, COATED CAST IRON, RIGHT OR LEFT HAND MAIN FITTING, 2" VENT CONNECTION, ADJUSTABLE GASKETED FACE PLATE, UNIVERSAL FLOOR MOUNTED FOOT SUPPORTS, CORROSION RESISTANT ADJUSTABLE ABS COUPLING WITH INTEGRAL TEST CAP, FIXTURE BOLTS, TRIM, STUD PROTECTORS, REAR ANCHOR TIE DOWN, BONDED GASKET, ABOVE FLOOR SANITARY DISCHARGE, STANDARD WEIGHT CLASS, STANDARD WALL SYSTEM, STANDARD WALL SYSTEM					ZURN: Z1203-N
	MOUNTING HEIGHT	MOUNTING HEIGHT 15"					
WC-3	WATER CLOSETS	FLUSH VALVE OPERATION, VITREOUS CHINA, FULLY GLAZED TRAPWAY, 1.28 GALLONS PER FLUSH, FLOOR MOUNTED, BOTTOM OUTLET, 12" ROUGH-IN, 1 1/2" TOP INLET SPUD, 25 PSI MINIMUM WORKING PRESSURE, COLOR: WHITE	–	1"	1 1/2"	3"	AMERICAN STANDARD: MADERA 2854.016
	WATER CLOSET FLUSHING SYSTEM	QUIET, EXPOSED, HIGH EFFICIENCY FLUSH VALVE, INFRARED PROXIMITY SENSOR, BATTERY POWERED, VANDAL RESISTANT CHROME PLATED CAST BRASS VALVE BODY, MANUAL OVER RIDE BUTTON, REVERSIBLE COVER, INTEGRAL VACUUM BREAKER, ADJUSTABLE TAILPIECE, SPUD COUPLING, FLANGE FOR TOP SPUD CONNECTION, VANDAL RESISTANT CONTROL STOP WITH INTERNAL SIPHON-GUARD PROTECTION					ZURN: ZTS6200EV
	WATER CLOSET SEAT	COMMERCIAL DUTY, EXTRA HEAVY WEIGHT, INJECTION MOLDED SOLID PLASTIC, LARGE MOLDED BUMPERS, STAINLESS STEEL POSTS, SELF-SUSTAINING, CONCEALED STAINLESS STEEL CHECK HINGE HOLDING SEAT IN ANY RAISED POSITION UP TO 11 DEG. BEYOND VERTICAL, OPEN FRONT, LESS COVER, COLOR: WHITE					CHURCH: 9500SSCT
UR-1	URINAL	WALL MOUNTED, ELONGATED RIM, ADA COMPLIANT, WASHOUT BOWL, 2" OUTLET	–	3/4"	1 1/4"	2"	ZURN: Z5738.205.00
	URINAL CARRIER	SPECIFICATION "FIXTURE CARRIER, WALL URINAL SUPPORT SYSTEM, TOP AND BOTTOM SUPPORT PLATES, COATED RECTANGULAR STEEL UPRIGHTS, WELDED FEET, ADJUSTABLE SUPPORT PLATES, MOUNTING FASTENERS, "					ZURN: Z1222
	MOUNTING HEIGHT	17" MAXIMUM A.F.F (ADA)					
S-1	SINK	DOUBLE BOWL, EQUAL SIZED BOWLS, 18 GAUGE TYPE 304 (18-8) NICKEL BEARING STAINLESS STEEL, COVED CORNERS, HIGHLIGHTED SWIRLED SATIN FINISH, SELF RIMMING, FULLY PROTECTED UNDERSIDE WITH SOUND DEADENING MATERIAL, THREE FAUCET HOLES ON 4" CENTERS, DRAIN OPENING CENTERED IN BASIN	1/2"	1/2"	1 1/2"	1 1/2"	ELKAY: LUSTERTONE DLR251910
	SINK FAUCET	4" CENTERS, SINK MOUNTED, SOLID BRASS CONSTRUCTION, CHROME PLATED FINISH, LAMINAR FLOW AERATOR: 2.2 GPM AT 60 PSI, DUAL HANDLE, 4" WRIST BLADES, INTEGRAL CONCEALED MOUNT MIXING VALVE, SWING SPOUT, LESS HOSE SPRAY, ADA COMPLIANT, 3-HOLES					ELKAY: LKDA2438BH
	SUPPLIES	CHROME PLATED ANGLE STOPS WITH LOOSE KEY HANDLE, CHROME PLATED FLEXIBLE BRASS RISER, INSULATE ALL EXPOSED WATER LINES AND VALVES					
	SINK WASTE	POLISHED TYPE 304 STAINLESS STEEL BODY WITH BASKET STRAINER, 1 1/2" 17 GAUGE CHROME PLATED ADJUSTABLE BRASS P-TRAP WITH CLEANOUT PLUG, FITS 3 1/2" OPENING, 1 1/2" NICKEL PLATED BRASS TAILPIECE, RUN PARALLEL AND AS TIGHT TO WALL AS POSSIBLE, INSULATE ALL EXPOSED WASTE LINES					ELKAY: LK35
LAV-1	LAVATORIES	COUNTERTOP SINK, VITREOUS CHINA, SELF-RIMMING, FRONT OVERFLOW, OVAL SHAPED LAVATORY, SIZE: VITREOUS CHINA, FRONT OVERFLOW, 3 FAUCET HOLES CENTERED ON 4" CENTERS, LESS SOAP DISPENSER HOLE, ADA COMPLANT, COLOR: WHITE	3/8"	3/8"	1 1/4"	1 1/4"	AMERICAN STANDARD: CADET 0419.444
	LAVATORY FAUCET	SINGLE HANDLE, SOLID BRASS FABRICATED BODY, 1/4 TURN HANDLE STOPS, CONTROL MECHANISM IS A ROTATING CYLINDER TYPE WITH STAINLESS STEEL PLATE AND 90 DEG. ROTATION, REPLACEABLE NON-METALLIC SEATS OPERATING IN STAINLESS STEEL LINED SOCKETS, METAL GRID STRAINER, 0.5 GPM AERATOR, 3/8" THREADED MALE INLET SHANKS. PROVIDE POWERS LFE480 THERMOSTATIC MIXING VALVE BELOW FIXTURE. SET TEMPERATURE AS REQUIRED BY AHJ.					DELTA FAUCETS: 501-WFHGMHDF
	LAVATORY SUPPLIES	CHROME PLATED ANGLE STOPS WITH LOOSE KEY HANDLE, CHROME PLATED FLEXIBLE BRASS RISER, INSULATE ALL EXPOSED WATER LINES AND VALVES					
	LAVATORY WASTE	GRID DRAIN STRAINER, 1 1/4" OFFSET TAILPIECE, 1 1/4" 17 GAUGE CHROME PLATED ADJUSTABLE BRASS P-TRAP WITH CLEANOUT PLUG, 1 1/4" CHROME PLATED BRASS WASTE TO WALL					
	LAVATORY PROTECTIVE PIPE COVERS	ADA COMPLIANT, CHINA WHITE, ANTI-BACTERIA/FUNGAL, MOLDED VINYL, P-TRAP COVER, TWO ANGLE VALVE AND SUPPLY COVERS, 5" OFFSET TAILPIECE WHEEL CHAIR STRAINER COVER					TRUEBRO: 103 E-2 PLUMBEREX: X4444

PLUMBING FIXTURE SCHEDULE

Mark		DESCRIPTION	FINAL CONNECTIONS HW	CW	V	W	MANUFACTURER MODEL NUMBER
LAV-2	LAVATORIES	WALL HUNG, VITREOUS CHINA, D-SHAPED BOWL, FRONT OVERFLOW, SELF-DRAINING DECK AREA WITH CONTOURED BACK AND SIDE SPLASH SHIELDS, CONCEALED WALL HANGAR, RECTANGULAR SHAPED LAVATORY, SIZE: VITREOUS CHINA, FRONT OVERFLOW, 3 FAUCET HOLES CENTERED ON 4" CENTERS, LESS SOAP DISPENSER HOLE, ADA COMPLANT, 34" TOP OF LAVATORY TO FINISHED FLOOR COLOR: WHITE	3/8"	3/8"	1 1/4"	1 1/4"	AMERICAN STANDARD: LUCERNE 0355.012
	LAVATORY FAUCET	SINGLE HANDLE, SOLID BRASS FABRICATED BODY, 1/4 TURN HANDLE STOPS, CONTROL MECHANISM IS A ROTATING CYLINDER TYPE WITH STAINLESS STEEL PLATE AND 90 DEG. ROTATION, REPLACEABLE NON-METALLIC SEATS OPERATING IN STAINLESS STEEL LINED SOCKETS, METAL GRID STRAINER, 0.5 GPM AERATOR, 3/8" THREADED MALE INLET SHANKS. PROVIDE POWERS LFE480 THERMOSTATIC MIXING VALVE BELOW FIXTURE. SET TEMPERATURE AS REQUIRED BY AHJ.					DELTA FAUCETS: 501-WFHGMHDF
	LAVATORY SUPPLIES	CHROME PLATED ANGLE STOPS WITH LOOSE KEY HANDLE, CHROME PLATED FLEXIBLE BRASS RISER, INSULATE ALL EXPOSED WATER LINES AND VALVES					
	LAVATORY WASTE	GRID DRAIN STRAINER, 1 1/4" OFFSET TAILPIECE, 1 1/4" 17 GAUGE CHROME PLATED ADJUSTABLE BRASS P-TRAP WITH CLEANOUT PLUG, 1 1/4" CHROME PLATED BRASS WASTE TO WALL					
	LAVATORY PROTECTIVE PIPE COVERS	ADA COMPLIANT, CHINA WHITE, ANTI-BACTERIA/FUNGAL, MOLDED VINYL, P-TRAP COVER, TWO ANGLE VALVE AND SUPPLY COVERS, 5" OFFSET TAILPIECE WHEEL CHAIR STRAINER COVER					TRUEBRO: 103 E-2 PLUMBEREX: X4444
EWC-1	ELECTRIC WATER COOLER	DUAL, ELECTRIC WATER COOLER, D-SHAPED BOWL, WALL HUNG, EXPOSED ON WALL, COUNTOURED SHOCK-ABSORBING UPPER SHROUD, NO EXPOSED FASTENERS, HIGH SIDE ON THE RIGHT, EASY-TOUCH CONTROLS ON THE FRONT AND SIDES, REFRIGERATED UNIT, REFRIGERANT HFC-134 A CONTROLLED BY CAPILARY TUBE, BASE FLOW RATE OF 8.0 GPH, BARRIER FREE SELF-CONTAINED, ONE PIECE POLISHED STAINLESS STEEL BASIN, INTEGRAL DRAIN GRID, EMBOSSED BUBBLER, ONE-PIECE REMOVABLE LOWER SHROUD FOR ACCESS TO INTERNAL COMPONENTS, LEAD-FREE WATERWAYS, EASILY CLEANABLE SCREEN, SELF-CONTAINED, ONE PIECE POLISHED STAINLESS STEEL BASIN, INTEGRAL DRAIN GRID, EMBOSSED BUBBLER, ONE-PIECE REMOVABLE LOWER SHROUD FOR ACCESS TO INTERNAL COMPONENTS, LEAD-FREE WATERWAYS, EASILY	–	3/8"	1 1/4"	1 1/4"	ELKAY: EZSTLR8C
	ACCESSORIES	PROVIDE ACCESSORY GLASS FILLER OPTION					
	SUPPLIES	1/2" COLD WATER SUPPLY WITH CONCEALED STOP WITH WHEEL HANDLE, 1/2" CHROME PLATED FLEXIBLE BRASS RISER, 1/2" COLD WATER SUPPLY WITH CONCEALED STOP WITH WHEEL HANDLE, 1/2" CHROME PLATED FLEXIBLE BRASS RISER					
	WASTE	1 1/4" 17 GAUGE CHROME PLATED BRASS ADJUSTABLE P-TRAP WITH CLEANOUT PLUG, 1 1/4" CHROME PLATED BRASS WASTE TO WALL, CONCEALED IN UNIT, 1 1/4" 17 GAUGE CHROME PLATED BRASS ADJUSTABLE P-TRAP WITH CLEANOUT PLUG, 1 1/4" CHROME PLATED BRASS WASTE TO WALL, CONCEALED IN UNIT					
	MOUNTING HEIGHT	33.5 A.F.F					
FMS-1	FLOOR MOP SINK	MOLDED STONE, PLAIN CURBS, ONE PIECE 24"X24"X10" SQUARE BASIN, WITH TILING FLANGE	1/2"	1/2"	1 1/4"	2"	FIAT: MSB-2424
	FLOOR MOP SINK FAUCET	WALL MOUNTED HOT AND COLD WATER SERVICE FAUCET EXTENDING 9 3/8" FROM BACK OF WALL FLANGE, VACUUM BREAKER, CHROME PLATED, 3/4" HOSE THREAD ON SPOUT, PAIL HOOK, ADJUSTABLE WALL BRACE, FLAT STAINLESS STEEL STRAINING, 24" LONG X 3" WIDE STAINLESS STEEL MOP BRACKET WITH THREE RUBBER GRIPS, 36" LONG HOSE WITH WALL HANGER					MUSTEE: 63.600A STERN WILLIAMS: T-10-VB
	SUPPLIES	1/2" HOT AND COLD WATER WITH CONCEALED STOP WITH WHEEL HANDLE, 1/2" CHROME PLATED FLEXIBLE BRASS RISER					
	WASTE	DRAIN SHALL BE INTEGRAL STAINLESS STEEL COMBINATION FLAT STRAINER AND LINT BASKET, FACTORY INSTALLED STAINLESS STEEL DRAIN BODY, CAST IRON P-TRAP					
	ACCESSORIES	24" LONG X 3" WIDE STAINLESS STEEL MOP BRACKET WITH THREE RUBBER GRIPS, 36" HOSE WITH HANGER, SPLASH GUARDS ON ADJACENT WALLS AS REQUIRED					
WH-1	WALL HYDRANT	ENCASED, ANTI-SIPHON, AUTOMATIC DRAINING, COPPER CASING, ALL BRONZE INTERIOR WALL HYDRANT WITH NON-TURNING OPERATING ROD WITH FREE-FLOATING COMPRESSION CLOSURE VALVE, VANDAL-RESISTANT LOOSE TEE HANDLE OPERATING STEM, ADJUSTABLE PACKING NUT, INTEGRAL TAMPER PROOF VACUUM BREAKER, SINGLE TEMPERATURE 3/4" INLET MALE END CONNECTION, CHROME-PLATED BOX AND HINGED COVER WITH LOOSE OPERATING KEY, NON-FREEZE CLIMATE	–	1/2"	–	–	WOODFORD: B65-CH WOODFORD: B67-CH ZURN: Z1320-C
	MOUNTING HEIGHT	18" ABOVE FINISHED GRADE OR FLOOR					
FD-1	FLOOR DRAIN	STANDARD STRAINER, COATED CAST IRON, TWO-PIECE BODY, DOUBLE DRAINAGE FLANGE, ADJUSTABLE EXTENSION AS REQUIRED BY APPLICATION, ADJUSTABLE COLLAR WITH SEEPAGE SLOTS, INVERTIBLE NON-PUNCTURING MEMBRANE CLAMP, FLASHING CLAMP WITH 24"X24" 4 LB. LEAD FLASHING FOR FLOOR DRAINS INSTALLED ABOVE SLAB ON GRADE, BOTTOM OUTLET, OUTLET CONNECTION METHOD SHALL BE COMPATIBLE WITH PIPING MATERIALS IN ACCORDANCE WITH THE SPECIFICATIONS, POLISHED NICKEL BRONZE FINISH, 5" DIAMETER ROUND STRAINER, 1/2" TRAP PRIMER CONNECTION	–	–	1 1/2"	SEE PLANS	JR SMITH: 2010-NB ZURN: Z415B
RD-1	ROOF DRAIN	PRIMARY STORM SYSTEM, 12" DIAMETER STRAINER, COATED CAST IRON BODY, BOTTOM OUTLET, OUTLET CONNECTION METHOD SHALL BE COMPATIBLE WITH PIPING MATERIALS AND IN ACCORDANCE WITH THE SPECIFICATIONS, CAST IRON STRAINER, GENERAL PURPOSE ROOF DRAIN, UNDERDECK CLAMP, ADJUSTABLE EXTENSION	–	–	–	SEE PLANS	ZURN: Z121
ORD-2	ROOF DRAIN	SECONDARY STORM SYSTEM, 12" DIAMETER STRAINER, COATED CAST IRON BODY, BOTTOM OUTLET, OUTLET CONNECTION METHOD SHALL BE COMPATIBLE WITH PIPING MATERIALS AND IN ACCORDANCE WITH THE SPECIFICATIONS, CAST IRON STRAINER, GENERAL PURPOSE ROOF DRAIN, UNDERDECK CLAMP, ADJUSTABLE EXTENSION, 2" HIGH EXTERNAL WATER DAM	–	–	–	SEE PLANS	ZURN: Z121-89
DSN-1	DOWNSPOUT NOZZLES	NICKEL BRONZE DECORATIVE NOZZLE BODY AND FLANGE, CONNECTION AS REQUIRED BY APPLICATION, ROUGH-IN HEIGHT 18" ABOVE GRADE OR SLABDOWNSPOUT NOZZLE	–	–	–	SEE PLANS	J.R. SMITH: 1770-NB ZURN: ZANB199
FCO-1	CLEANOUT - FLOOR	ACID RESISTING COATED CAST IRON BODY, ADJUSTABLE, GAS AND WATER TIGHT ABS TAPERED THREADED INTERNAL CAST IRON PLUG, VANDAL-PROOF FASTENERS, OUTLET CONNECTION METHOD SHALL BE COMPATIBLE WITH PIPING MATERIALS IN ACCORDANCE WITH THE SPECIFICATIONS, MEDIUM DUTY, ROUND SCORIATED SECURED POLISHED NICKEL BRONZE FRAME AND COVER WITH ANCHOR FLANGE, WITH "CO" IN COVER, INSTALLED FLUSH WITH FINISHED FLOOR. PROVIDE CARPET MARKERS WHERE INSTALLED BELOW CARPET	–	–	–	AS NEEDED	ZURN: ZN1400-VP
WCO-1	WALL CLEANOUT	ACID RESISTING COATED CAST IRON CLEANOUT TEE, COUNTERSUNK BRONZE PLUG, ROUND STAINLESS STEEL SECURED ACCESS COVER, VANDAL-PROOF FASTENERS	–	–	–	2"	J.R. SMITH: 4710 WADE: 8480R ZURN: Z1446
TP-1	TRAP PRIMER	PRESSURE ACTIVATED TRAP PRIMER, BRASS CONSTRUCTION, PISTON OPERATED, ADJUSTMENT FOR VARIABLE PRESSURES, INSTALL TRAP PRIMER A MINIMUM OF 12" ABOVE THE TRAP BEING SERVED, PROVIDE AIR GAP FITTING WITH 1/2" MALE NPT INLET FITTING AND 1/2" FEMALE OUTLET FITTING, FOUR TRAP APPLICATION	–	1/2"	–	–	MIFAB: – M-500
	TRAP PRIMER DISTRIBUTION UNIT	COPPER BODY DISTRIBUTION UNIT, 4 – 3/8" FPT BRASS DISCHARGE FITTINGS, 1/2" MALE NPT COMPOSITE INLET, PROVIDE PLUGS AS REQUIRED BY APPLICATION					PRECISION PRODUCTS: – DU-4

ktgy

17911 Von Karman Ave.
Suite 200
Irvine, CA 92614
ktgy.com
949.851.2133

ktgy Project Number

Contact DORINA WATSON
Email dwatson@ktgy.com
Senior Director DAVID SCHMITZ
Designer RUSSEL ROSALES

Developer
SEDC
23906 SOBOBA ROAD
SAN JACINTO, CA 92581

PHONE: (951) 663-2058

SOBOBA SOVOVATUM VILLAGE PHASE-2

SAN JACINTO, CA

No.	DATE	DESCRIPTION

Client is responsible for notifying architect in writing for any discovered errors or omissions in the plans and specifications during construction of the project. Failure for Client to notify Architect of any known errors or omissions in the plans or specifications, and proceeding with constructing the portion of work shown in the plans or specifications containing known errors or omissions shall be a waiver by Client for any liability of Architect for such known errors or omissions. Client releases Architect for any liability for such portions of work, and Architect shall not be liable for any delay damages, change orders, repair costs, removal or demolition costs, or replacement of any such portions of work.

2026-05-26, ISSUED FOR BID

Sheet Name
PLUMBING SCHEDULES

Schnackel engineers
800-381-0963 www.schnackel.com

P3-11

SE JOB#: 250720

COPYRIGHT 2024 KTGY GROUP INC. These plans and specifications are protected by United States copyright law and may not be used, reproduced, distributed, transmitted, displayed, or modified in any way without the prior written consent of KTGY Group, Inc. or the authorized copyright holder or licensee.

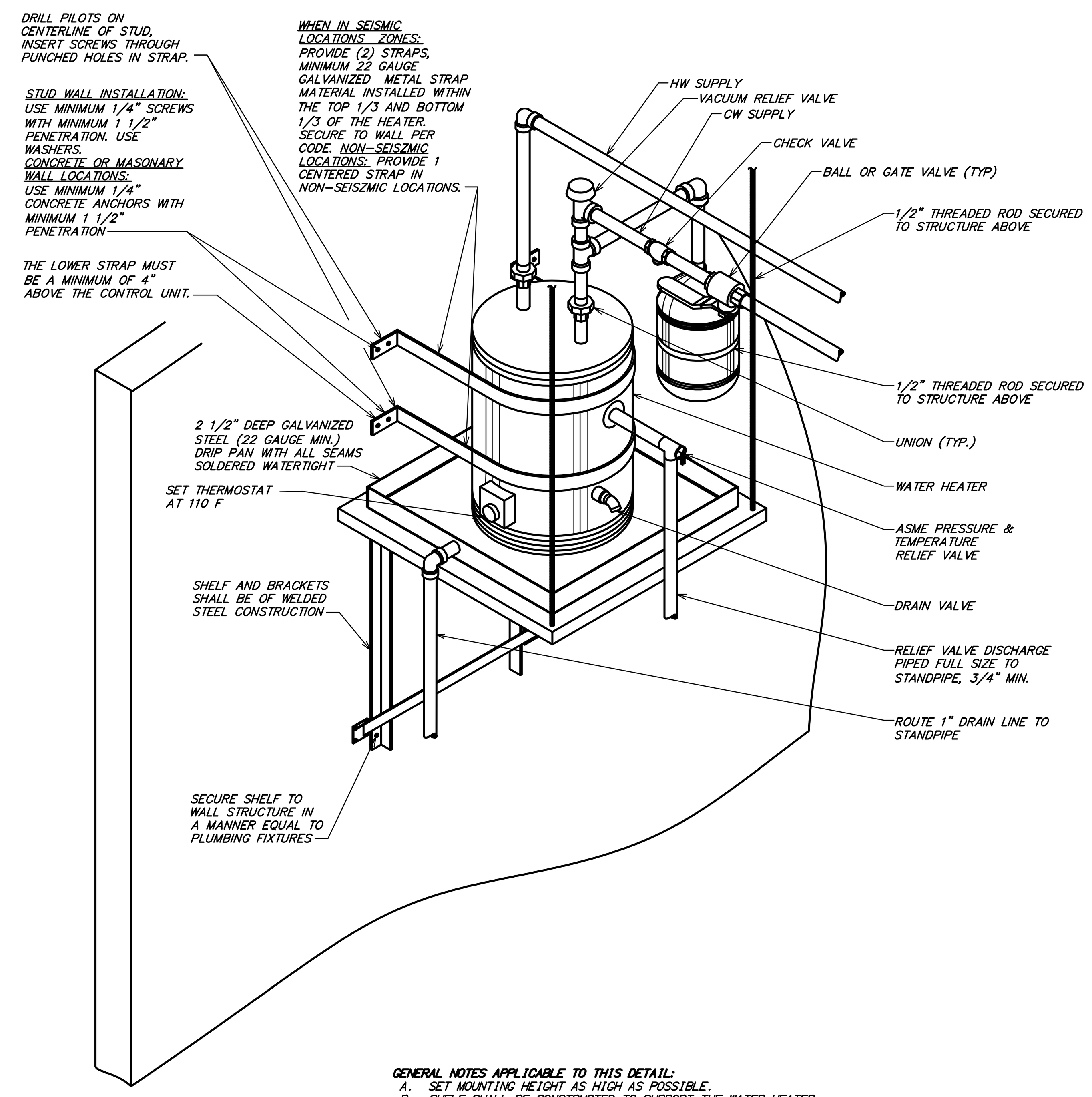

GENERAL NOTES APPLICABLE TO THIS DETAIL:
A. SET MOUNTING HEIGHT AS HIGH AS POSSIBLE.
B. SHELF SHALL BE CONSTRUCTED TO SUPPORT THE WATER HEATER CAPACITY INDICATED. SEE FLOOR PLANS FOR LOCATION.

12 WATER HEATER DETAIL
NOT TO SCALE

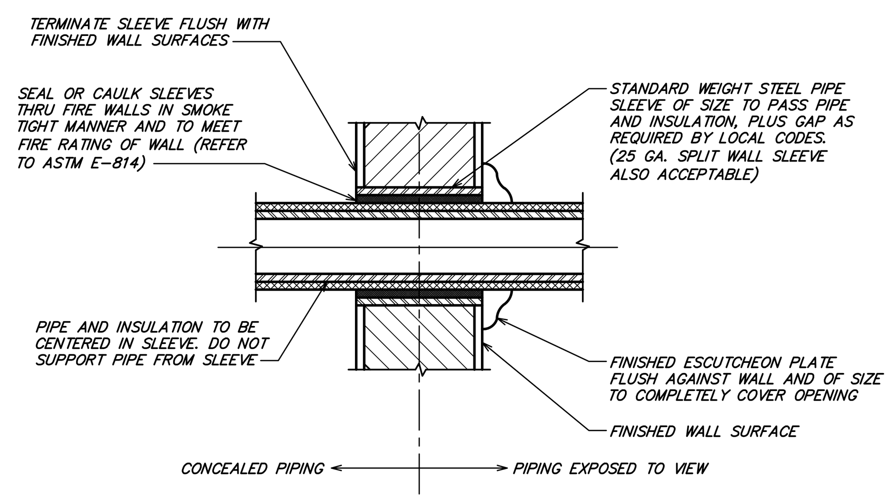

NOTE: PROVIDE FOR ALL MASONRY WALLS AND FIRE RATED WALLS

9 PIPE SLEEVE AT INTERIOR WALLS
NOT TO SCALE

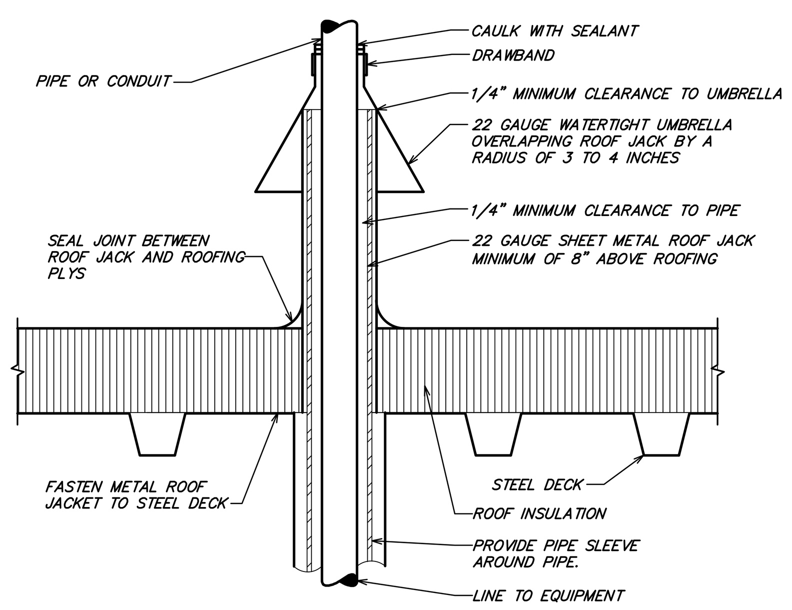

8 PIPE/CONDUIT PENETRATION THRU ROOF
NOT TO SCALE

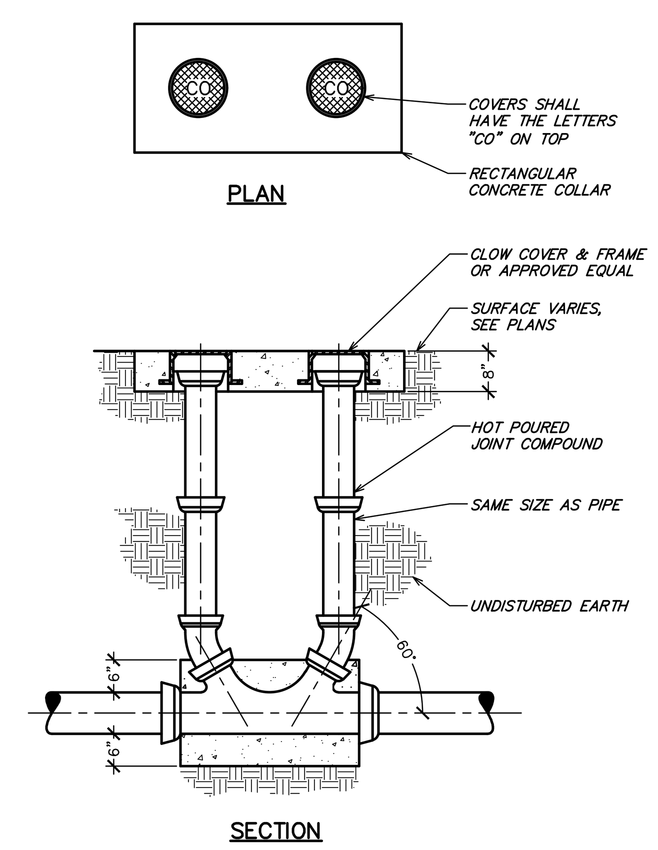

5 TWO WAY CLEANOUT DETAIL
NOT TO SCALE

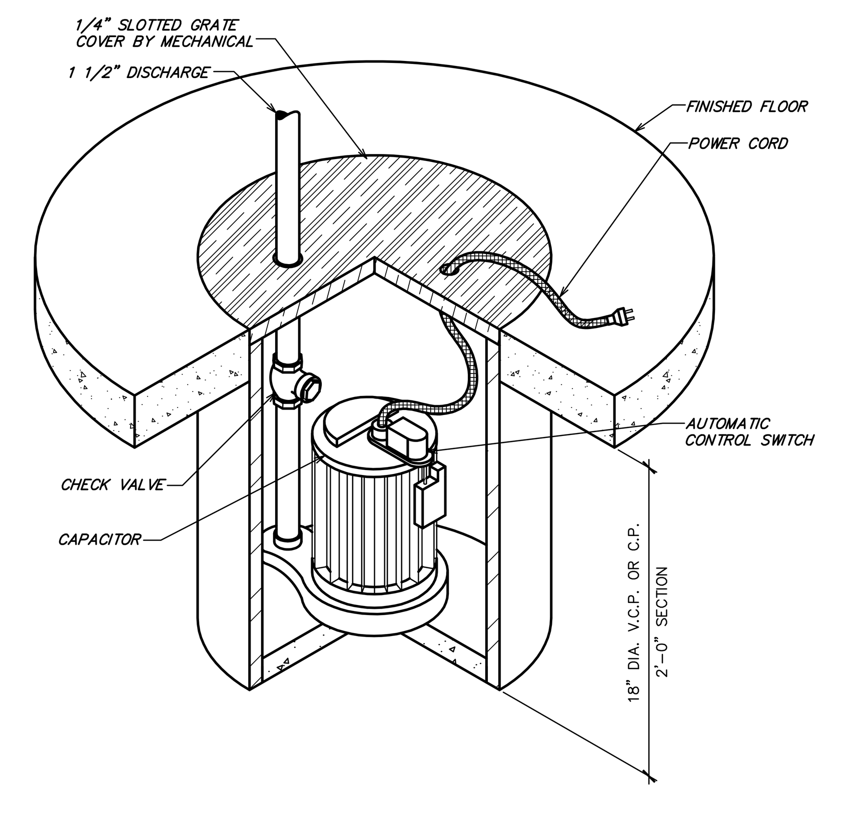

4 ELEVATOR SUMP PUMP DETAIL
NOT TO SCALE

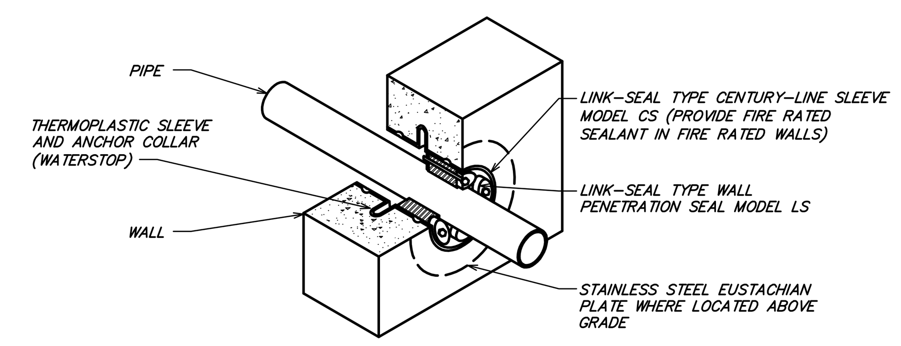

3 PIPE SLEEVE AT EXTERIOR WALLS
NOT TO SCALE

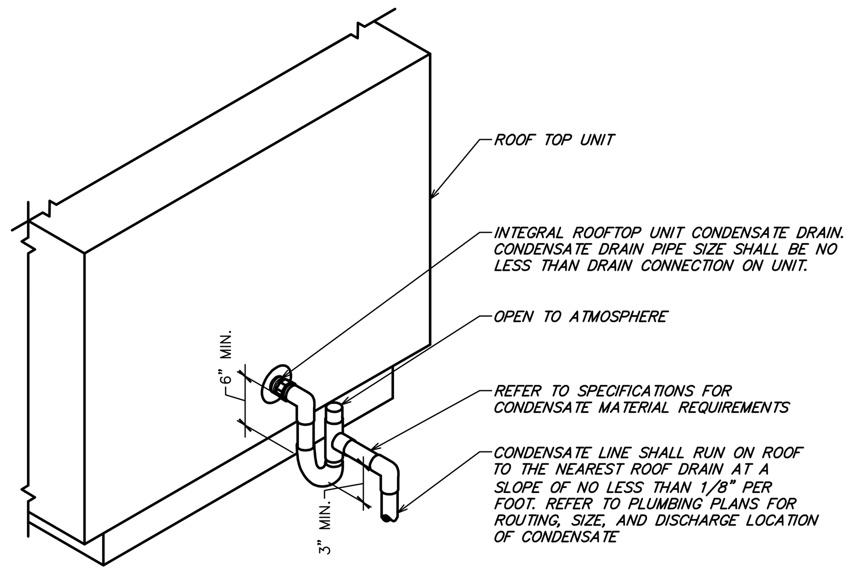

11 ROOFTOP UNIT CONDENSATE TRAP
NOT TO SCALE

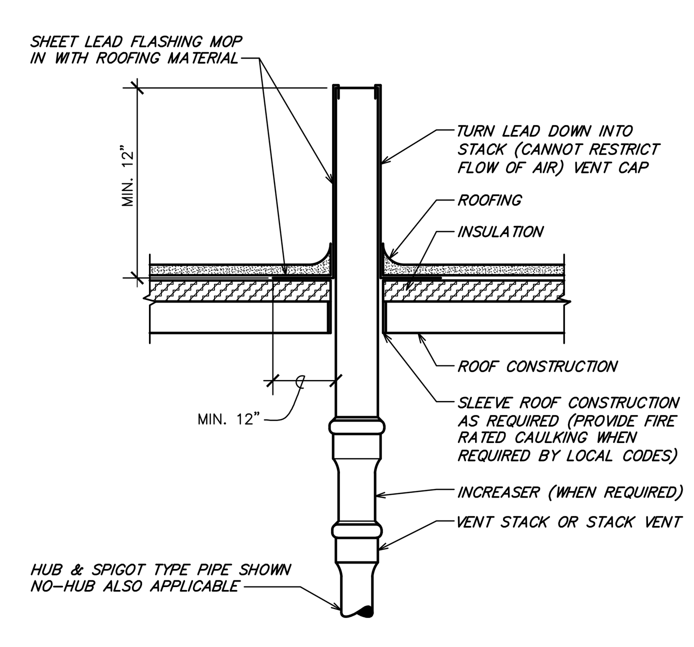

7 VENT TERMINATION LEAD FLASHING
NOT TO SCALE

INSTALL PER PDI STANDARDS AND MANUFACTURER'S INSTRUCTIONS

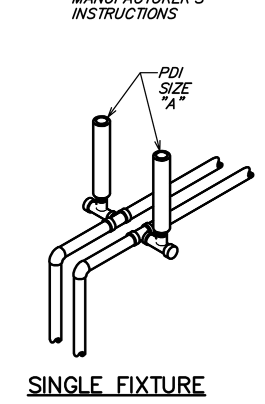

FIXTURE UNIT TABULATION		
FIXTURE	COLD	HOT
VALVE WATER CLOSET	10	--
TANK WATER CLOSET	5	--
URINAL	5	--
LAVATORY/SINK	1.5	1.5
JANITOR'S SINK	3	3
SHOWER/BATHTUB	2	2

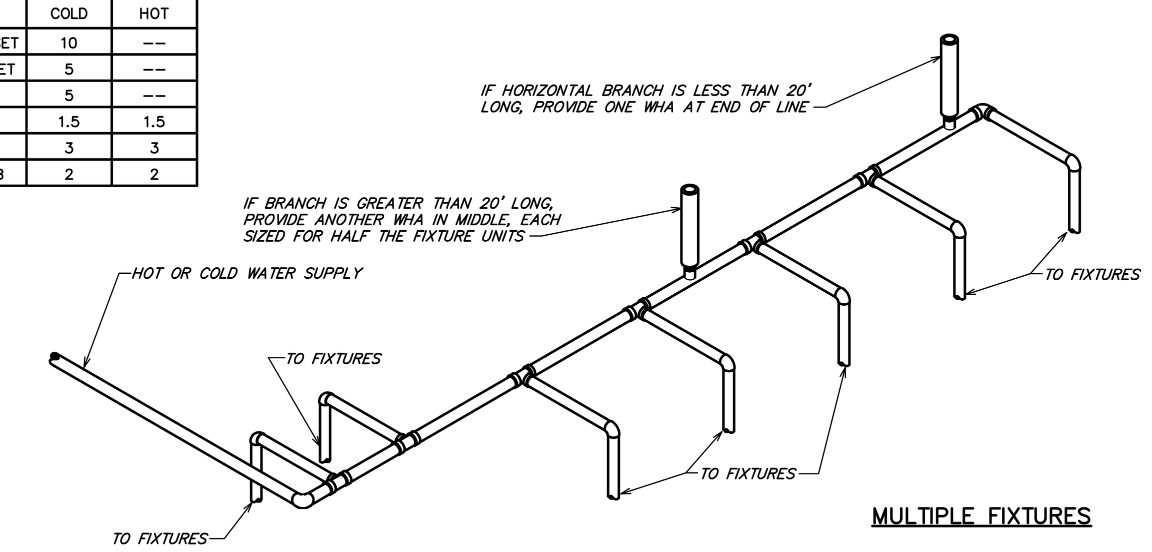

PDI SIZE	PIPE SIZE	FIXTURE UNIT LOAD
A	1/2"	1-11
B	3/4"	12-32
C	1"	33-60
D	1-1/4"	61-113
E	1-1/2"	114-154
F	2"	155-330

PLUMBING CONTRACTOR SHALL PROVIDE WATER HAMMER ARRESTERS BY SIOUX CHIEF, PRECISION PLUMBING PRODUCTS, WATTS OR APPROVED EQUIVALENT WITH PISTON AND O-RING CONSTRUCTION, HAVING PDI #WH-201, ASSE #1010 AND ANSI #A112.26.1M CERTIFICATION. INSTALL IN HORIZONTAL OR VERTICAL POSITION, BUT NEVER UPSIDE DOWN. INSTALL IN LINE WITH WATER FLOW DIRECTION IF POSSIBLE. SIZE THE UNITS AS SHOWN ON THE DRAWINGS AND/OR PER THE TABLES SHOWN ABOVE.

2 WATER HAMMER ARRESTERS
NOT TO SCALE

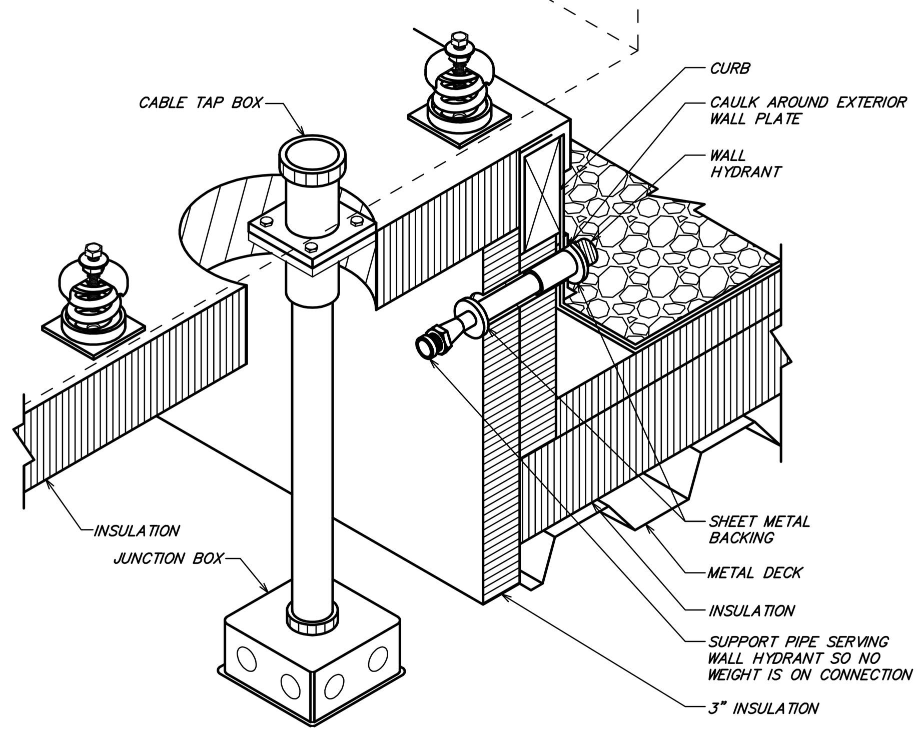

10 ROOF CURB HYDRANT DETAIL
NOT TO SCALE

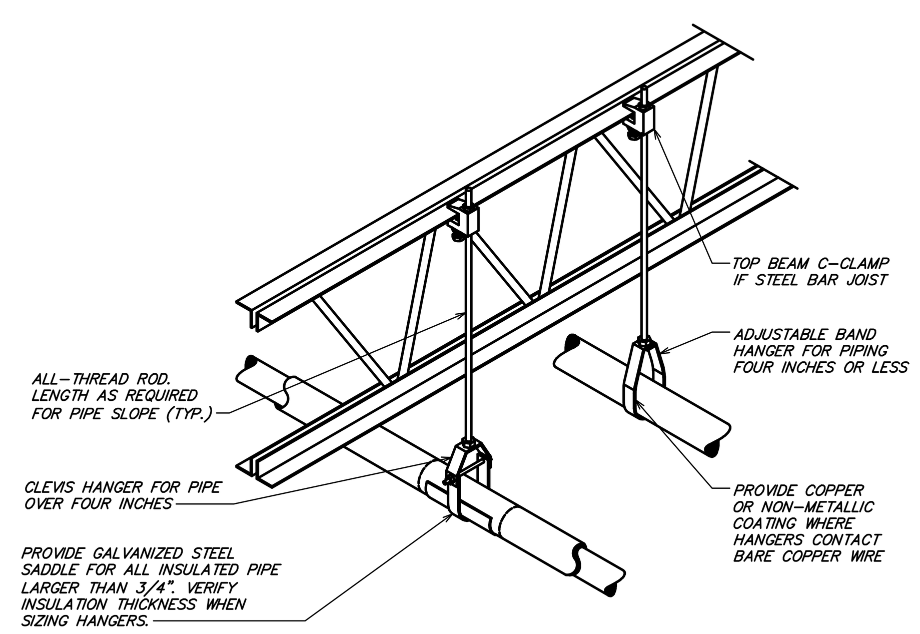

NOTE:
PROVIDE UPPER ATTACHMENT AS REQUIRED FOR CASES NOT SHOWN HERE. DO NOT INSTALL HANGER INSIDE INSULATION OR OTHERWISE PENETRATE VAPOR BARRIER. DO NOT HANG ONE PIPE FROM ANOTHER EXCEPT IN CHASES. TRAPEZE HANGERS MAY BE USED FOR MULTIPLE PARALLEL PIPES. HANGER SPACING FOR PIPE SIZE: COPPER: 4"=12' 3"=11' 2-1/2"=10' 2"=9' 1-1/2"=8' 1-1/4"=7' 1"=6' 3/4"=6' 1/2"=5'. CAST IRON: 10' AND ONE NEAR ALL JOINTS. STEEL: 4"=14' 3"=12' 2-1/2"=11' 2"=10' 1-1/2"=9' 1"=7' 3/4"=6' 1/2"=5'. LOCATE HANGERS AS CLOSE AS POSSIBLE TO TURNS AND TEES OF PIPE. PROVIDE SUPPLEMENTARY STEEL STRUTS BETWEEN JOISTS IF REQUIRED. LOCATE HANGERS TO TAKE LOAD OFF OF EQUIPMENT CONNECTIONS. ANCHOR WATER PIPE AGAINST SWAYING DUE TO CHANGES IN WATER VELOCITY. PROVIDE SEISMIC BRACING IF/AS REQUIRED BY LOCAL AUTHORITIES. CHAINS OR PERFORATED STRAP IRON OR STEEL IS NOT ACCEPTABLE. REFER TO CODES FOR FURTHER INFORMATION.

6 PIPE INSULATION DETAIL
NOT TO SCALE

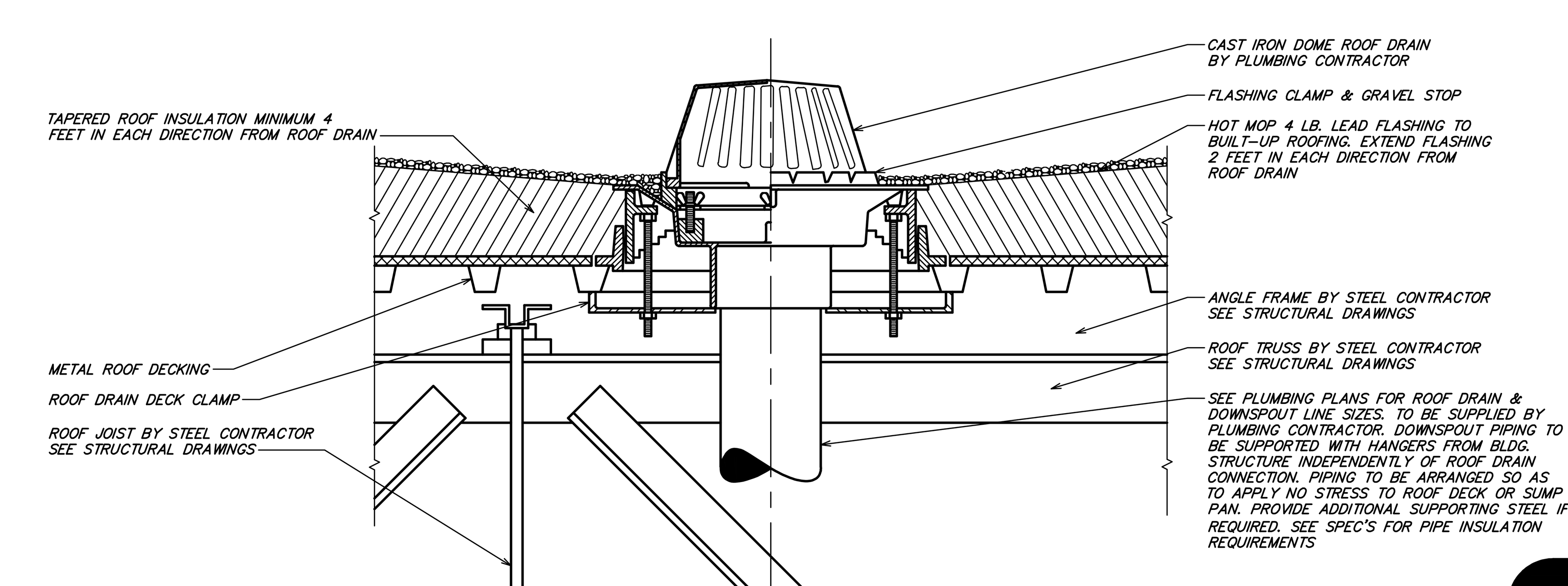

1 ROOF DRAIN DETAIL
NOT TO SCALE

Schnackel engineers
New York ■ Miami ■ Omaha ■ Los Angeles ■ Seattle ■ Honolulu
800-581-0963 www.schnackel.com

ktgy
17911 Von Karman Ave.
Suite 200
Irvine, CA 92614
ktgy.com
949.851.2133

ktgy Project Number
Contact DORINA WATSON
Email dwatson@ktgy.com
Senior Director DAVID SCHMITZ
Designer RUSSEL ROSALES

Developer
SEDC
23906 SOBOBA ROAD
SAN JACINTO, CA 92581

PHONE: (951) 663-2058

SOBOBA SOVOVATUM VILLAGE PHASE-2

-
SAN JACINTO, CA

No.	DATE	DESCRIPTION

Client is responsible for notifying architect in writing for any discovered errors or omissions in the plans and specifications during construction of the project. Failure for Client to notify Architect of any known errors or omissions in the plans or specifications, and proceeding with constructing the portion of work shown in the plans or specifications containing known errors or omissions shall be a waiver by Client for any liability of Architect for such known errors or omissions. Client releases Architect for any liability for such portions of work, and Architect shall not be liable for any delay damages, change orders, repair costs, removal or demolition costs, or replacement of any such portions of work.

2026-05-26, ISSUED FOR BID

Sheet Name
PLUMBING DETAILS

P3-12

SE JOB#: 250720

COPYRIGHT 2024 KTGY GROUP INC. These plans and specifications are protected by United States copyright law and may not be used, reproduced, distributed, transmitted, displayed, or modified in any way without the prior written consent of KTGY Group, Inc. or the authorized copyright holder or licensee.

SECTION 21000 - FIRE SUPPRESSION GENERAL CONDITIONS

PART 1 GENERAL

1.01 APPLICABILITY
A. This section supplements all sections of the Specifications for Division 21 and shall apply to all phases of work hereinafter specified, shown on the Drawings, or required to provide a complete installation of approved fire suppression systems.
B. The Drawings, General Conditions and General Provisions of the Contract apply to this Section and the other Sections of Division 21 of the specifications. Where conflicts arise between these documents, the more stringent provision will be applicable, subject to the interpretation of the Engineer.
C. Furnish all labor, material, services, and skilled supervision necessary for the construction, erection, installation, connections, testing, and adjustment of all materials and electrical equipment specified herein, or shown or noted on the Drawings, and its delivery to the Owner, complete in all respects and ready for use.
D. Products furnished but not installed under this section:
1. Where plans indicate fixtures or equipment will be furnished by this Contractor for installation by other Contractors, this Contractor shall furnish all such equipment, complete in all respects and ready for installation.
2. Drawings, instructions, and manuals supplied with equipment furnished under Division 21, but installed under other Divisions shall be carefully preserved and turned over to the installing Contractor.
E. Products installed but not furnished under this section:
1. Where plans indicate fixtures or equipment will be furnished by others, this Contractor shall provide all rough-in and supplies and shall connect such equipment to the fire suppression systems.
2. Drawings, instructions, and manuals supplied with equipment furnished under separate Divisions but installed under Division 22 shall be carefully preserved and turned over to the Architect.

1.02 DEFINITIONS
A. "Work" is hereby defined as, "The construction and services required by the Contract Documents whether completed or partially completed and includes all labor, materials, equipment, and services provided or to be provided by the Contractor to fulfill the Contractor's obligations. The work may constitute the whole or a part of the project."
B. "Furnish" is hereby defined as, "To supply and deliver, unload, and inspect for damage."
C. "Install" is hereby defined as, "To unpack, assemble, erect, apply, place, finish, cure, protect, clean, connect, and place into operation into the work."
D. "Provide" is hereby defined as, "To furnish and install."
E. "Connect" is hereby defined as, "To bring service to the equipment and make final attachment including necessary switches, outlets, boxes, terminations, etc."
F. "Concealed" is hereby defined as, "Hidden from sight in chases, furred spaces, shafts, hung ceilings, embedded in construction, in crawl spaces, or buried."
G. "Exposed" is hereby defined as, "Not installed underground nor concealed as defined by the Specifications."
H. "Drawings" is hereby defined as, "All plans, details, equipment schedules, diagrams, sketches, etc. issued for the construction of the work."
I. Subgrade Elevations: 4 inches below finish grade elevations indicated on drawings, unless otherwise indicated.
J. Finish Grade Elevations: 4 inches above subgrade elevations indicated on drawings, unless otherwise indicated.

1.03 CODES AND STANDARDS
A. Perform work in accordance with the applicable Building Code, Electrical Code, Fire Code, Mechanical Code, Plumbing Code, Energy Code, and all other applicable codes, amendments, and ordinances. Also perform all work in accordance with the Americans with Disabilities Act (ADA) and the Authority Having Jurisdiction (AHJ) including Fire Marshal(s).
B. Perform work in accordance with Landlord requirements, including any Tenant Criteria Manuals and Lease Exhibits, where applicable.
C. Perform work in accordance with the applicable utility companies serving the project. Make all arrangements with the utility companies for proper coordination of the work.
D. Recognized Standards: Design, manufacture, testing and method of installation of all apparatus and materials furnished under the requirements of these Specifications shall conform to the latest publications or standard rules of National Fire Protection Association (NFPA), Factory Mutual Global, where applicable (FMG), Underwriters Laboratories, Inc. (U.L.), American Society for Testing and Materials (ASTM), American National Standards Institute (ANSI), National Electrical Code (NEC), and National Electrical Safety Code (NESC)
E. The Contract Documents shall take precedence where the Contract Documents exceed code, Landlord, utility, or recognized standards requirements.

1.04 PERMITS AND FEES
A. Permits, licenses, fees, inspections and arrangements required for the work under this Contract shall be obtained by the Contractor at his expense, unless otherwise indicated.
B. All fees and scheduling associated with obtaining an accurate water flow test shall be at the Contractor's expense.

1.05 CONTRACT DRAWINGS
A. The Contractor is responsible to obtain, fully understand, and coordinate the work with the complete set of Contract Documents. Any required corrections, including all associated costs, arising from issues caused by the Contractor's failure to understand and/or coordinate the work with the complete set of Contract Documents are the Contractor's sole responsibility.
B. Work under these sections is diagrammatic unless indicated otherwise and is intended to convey the scope of work and indicate the general arrangement of piping, equipment, and accessories. Follow these drawings in laying out the work and verify spaces for the installation of these materials and equipment. Wherever a question exists as to the exact intended location of pipe, sprinklers, or equipment, obtain instructions from the Architect before proceeding with the work.
C. Notify the Architect/Engineer for resolution if a discrepancy is discovered within the Contract Documents. Failure of the Contractor to notify the Architect/Engineer of discrepancies shall result in the resolution becoming the Contractor's responsibility and subject to the Architect/Engineer's review and possible rejection. Should the Architect/Engineer reject a discrepancy resolution of which they were not notified, the Contractor is fully responsible to correct the installation, including all associated costs, until approval of the installation is given by the Architect/Engineer.

1.06 EXISTING CONDITIONS
A. Verify all existing conditions prior to beginning work.
B. Any existing conditions indicated in the Contract Documents are based on information drawings provided by others and possibly limited field verification. The Contractor shall adjust for actual field conditions at no additional expense to the Owner.
C. The Contractor shall visit the project site, review existing conditions against the Contract Documents, and familiarize himself with the work prior to bidding and start of the work. By signing the Contract, the Contractor acknowledges the site visit has been completed and the existing conditions are accepted.
D. The Contractor shall notify the Architect of major discrepancies in writing so the appropriate modifications to the design can be made without delay to the project. The Contractor assumes full responsibility of adjusting for discrepancies of which the Architect is not informed.
F. The Owner shall have first salvage right on all demolished equipment and materials. The Contractor shall dispose of all demolished equipment and materials the Owner rejects.
G. The Contractor shall notify the Architect/Engineer of field discrepancies in writing so the appropriate modifications to the design can be made without delay to the project. The Contractor assumes full responsibility of adjusting for discrepancies of which the Architect/Engineer is not informed.
H. Where connections are made between new work and existing work, the connections shall be made by using materials and methods to suit the actual conditions.
I. Where existing conditions are shown to be removed, by means of a hatched pattern, on the Drawings, this Contractor shall perform all work required for removal. Existing pipe run-outs shall be removed all the way back to mains and capped using appropriate methods.
J. Where existing work is to be modified, it shall be done in conformance with these specifications. Materials used shall be same as existing except where specified otherwise.

1.07 SUBMITTALS
A. Shop Drawings:
1. Furnish the Architect/Engineer shop drawing portfolios containing names of manufacturer and cut sheets of equipment to be used on the project. Use manufacturer's specification sheets identified by number indicated on drawings or schedules. Indicate catalog number on the cut sheets. As applicable, provide construction data, weight and dimensional data, performance data and listing data as part of the shop drawing submittal. Provide shop drawings for:
a. Fire Protection fixtures and equipment.
b. Fire Protection materials and accessories.
c. Product Data: Provide manufacturers catalogue information. Indicate valve data and ratings.
2. Submittals are reviewed only for general compliance with the Contract Documents. Dimensions, quantities and details are not checked during submittal review. Review of the submittals does not relieve the Contractor of the responsibility for providing all materials, equipment and accessories necessary for a complete and operational system meeting the requirements of the project and the intent of the Contract Documents. The responsibility for coordination of substituted materials and equipment lies solely with the substituting Contractor.
3. Approval shall not relieve the Contractor from responsibility for errors on the shop drawings.
4. If the shop drawings deviate from the contract documents, the Contractor shall advise the Engineer of the deviations in writing accompanying the shop drawings, including the reasons for the deviations.
B. Project Record Documents: Record actual locations of components and tag numbering.
C. Operation and Maintenance Data: Include installation instructions and spare parts lists.
D. Maintenance Data: Include assembly drawings, bearing data including replacement sizes, and lubrication instructions.

1.08 QUALITY ASSURANCE
A. Manufacturer Qualifications: Company specializing in manufacturing the Products specified in this section with minimum five years experience.
B. Installer Qualifications: Company specializing in performing the work of this section with minimum five years experience, approved by manufacturer.
C. Products:
1. Listed and classified by Underwriters Laboratories Inc. as suitable for the purpose specified and indicated.
2. Listed and classified by the local Department of Buildings and furnished with an acceptance number, where applicable.
3. Listed and classified by the Landlord's and/or Owner's insurance carrier, where applicable.
D. All equipment and components shall be free of all rust/corrosion or any visible damage. All items not complying with this requirement shall be replaced without any change in the Contract amount.
E. Equipment performance and accessories shall be as scheduled on the Drawings and specified herein. Inclusion in both locations is not a prerequisite to inclusion in the Contract. Equipment and accessories specified in either location shall be included in the Contract. Provide all necessary accessories and connections as required for a complete, functional system, including all required components reasonably inferred to as necessary although such components may or may not be specifically indicated in the Contract Documents.
F. Code or utility company requirements shall supersede any conflicting requirements of this section.
G. Fill Composition Test Reports: Results of laboratory tests on actual materials used; Compaction Density Test Reports.

1.09 DELIVERY, STORAGE, AND HANDLING
A. Deliver and store valves in shipping containers, with labeling in place.
B. Provide temporary protective coating on cast iron and steel valves.
C. Provide temporary end caps and closures on piping and fittings. Maintain in place until installation.
D. Protect motors stored on site from weather and moisture by maintaining factory covers and suitable weather-proof covering. For extended outdoor storage, remove motors from equipment and store separately.
E. Equipment: Protect equipment from physical damage by storing off site until the project is ready for immediate installation. Provide temporary caps on all pipes to prevent debris from entering the pipe.

1.10 WARRANTY AND GUARANTEE
A. Additional warranty and guarantee terms in excess of this requirement are specified within the individual sections of Division 22.
C. Provide two-year system warranty for complete replacement of fire extinguishing agents.

PART 2 PRODUCTS

2.01 SUBSTITUTIONS
A. The manufacturers listed are listed to set minimum standards for quality, design, and functionality. The products of other manufacturers may be submitted, at the Contractor's option, during shop drawing review unless indicated otherwise. The products of other manufacturers shall meet or exceed all requirements of the Contract Documents. The Contractor accepts all responsibility for costs and coordination issues arising out of the substitution of materials or equipment, and the coordination of such substitutions with all other contractors and subcontractors.
B. Sprinkler Systems: Conform work to NFPA 13 and all local requirements.
C. Standpipe and Hose Systems: Conform to NFPA 14 and all local requirements.
D. Welding Materials and Procedures: Conform to ASME Code.

PART 3 EXECUTION

3.01 COORDINATION OF WORK
A. Examine the Contract Documents as a whole for the work of other trades. Coordinate all work accordingly.
B. Work lines and established heights shall be in strict accordance with architectural drawings and specifications insofar as these drawings and specifications extend. Verify all dimensions shown and establish all elevations and detailed dimensions not shown.
C. Promptly report to the Architect any delay or difficulties encountered in the installation of the work, which might prevent prompt and proper installation, or make it unsuitable to connect with or receive the work of others. Failure to so report shall constitute an acceptance of the work of other trades as being fit and proper for the execution of this work.
D. Plan, lay out, and coordinate the work with all trades well enough in advance so that it proceeds with a minimum of interference to work that has not been completed and work that is in progress. Inform all trades of openings required for the work and provide all special frames, sleeves, and anchor bolts required. The fire suppression system layout may be altered to suit the conditions, prior to the installation of any work and without additional cost to the Owner. Conflicts arising from lack of coordination shall be this Contractor's responsibility.
E. Wherever pipe runs in or above ceilings or walls, the Contractor shall arrange the run of pipe in such a manner that it does not interfere with grilles, diffusers, outlet boxes, luminaires, or other ceiling mounted items.
F. Install systems, materials and equipment to provide for maximum headroom, where no ceiling height is established or indicated on the Drawings. Maintain access to equipment requiring service when selecting mounting elevations.
G. Install systems, materials and equipment level and plumb, parallel and perpendicular to building lines where exposed to view, unless otherwise indicated.
H. Conflicts arising from lack of coordination shall be this Contractor's responsibility. The Fire Suppression Contractor shall pay for all extra cutting and patching made necessary by his failure to properly direct such work at the correct time.
I. Perform all work in conformity with the Contract Documents and afford other trades reasonable opportunity for the execution of their work. Properly connect and coordinate this work with the work of other trades at such time and in such a manner as not to delay or interfere with their work.
J. Manufacturer's instruction sheets shall be followed explicitly in the installation of all equipment. Where manufacturer's instruction sheets conflict with requirements of these specifications or the Drawings, such conflicts shall be brought to the attention of the Architect/Engineer for clarification.
K. All roofing penetrations shall be flashed and weather sealed by the roofing manufacturer's authorized roofing contractor at this Contractor's expense. This Contractor shall contract with the factory authorized roofing contractor for the specific roofing system applicable to this Project. The use of an unauthorized roofing contractor may result in removal and replacement of the penetration systems at this Contractor's expense.
L. Although all such work is not specifically indicated, furnish and install all supplementary or miscellaneous items, appurtenances and devices incidental to or necessary for a sound, secure and complete installation.
M. Verify and coordinate all requirements and installation details of all materials and equipment that are to be furnished under other Divisions and installed or connected under Division 22 prior to rough-in. Conflicts arising from lack of coordination shall be this Contractor's responsibility. As such, the Contractor is responsible to:
1. Obtain and review shop drawings, product data, manufacturer's wiring diagrams, and manufacturer's instructions for equipment furnished under other sections.
2. Determine connection locations and requirements.
3. Sequence rough-in of fire suppression connections to coordinate with installation of equipment.

3.02 COORDINATION DRAWINGS
A. Prepare coordination drawings to a scale of 1/4"=1'-0" or larger; detailing major elements, components, and systems of fire suppression equipment and materials in relationship with other systems, installations, and building components. Indicate locations where space is limited for installation and access and where sequencing and coordination of installations are of importance to the efficient flow of the work, including (but not necessarily limited to) the following:
1. Indicate the proposed locations of conduits, equipment, and materials. Include the following:
a. Clearances required for maintaining Code required working space.
b. Equipment connections and support details.
c. Exterior wall and foundation penetrations.
d. Fire-rated wall and floor penetrations.
e. Sizes and location of required concrete pads and bases.
f. Indicate scheduling, sequencing, movement, and positioning of large equipment into the building during construction.
g. Prepare floor plans, elevations, and details to indicate penetrations in floors, walls, and ceilings and their relationship to other penetrations and installations.

3.03 EXAMINATION
A. Verify field measurements are as indicated on the Drawings.
B. Verify all pipe locations and sizes in field prior to fabrication or installation.
C. Verify all equipment locations in field prior to installation. Coordinate final locations with all trades.

3.04 INTERFACE WITH OTHER PRODUCTS
A. Install all pipe, equipment, and accessories to preserve fire resistance rating of partitions and other elements, using materials and methods specified.

3.05 FIELD QUALITY CONTROL
A. Provide tests as necessary to establish the adequacy, quality, safety, completed status, and suitable operation of each system. Tests shall be conducted under the supervision of the Architect.
B. Install all equipment, devices, pipe, and materials securely and in a neat and workmanlike manner in accordance with all applicable standards and codes.
C. Install all equipment, pipe, and materials plumb and level and align and adjust for satisfactory operation.
D. Install all equipment, pipe, and materials in accordance with the manufacturer's instructions and recommendations.
E. Inspect all equipment, pipe, and materials for defects.

3.06 ERECTION
A. Rigging:
1. The Fire Suppression Contractor shall arrange for all labor and equipment required for the proper installation of the fire Suppression equipment in the locations indicated on the Drawings. Where crane rental or other erection is required, such costs shall be included in the Fire Suppression Contract, unless specific arrangements are made with the General Contractor to cover these costs.
B. Supplemental Framing:
1. Provide the design, fabrication, and erection of supplementary structural framing required for attachment of hangers or other devices supporting fire Suppression equipment. Provide framing members of standard rolled steel shapes, A-36 steel. Provide members welded to structural members equal to the specification for the main structural member. Provide "simple beam" type framing with end connections welded or bolted for shear loads. Use cantilevers when detailed or specifically approved by the Architect/Engineer. The Architect/Engineer's approval is required for location of supplementary framing. Use only certified welders. Design framing members for their actual loads, with allowable stresses specified by AISC, without excessive deflection and with consideration for rigidity under vibration, in accordance with standard structural practices. Show on shop drawing supplementary framing, including design loads, member size and location.

3.07 CUTTING, PATCHING, AND PIERCING
A. Cutting of openings and installation of sleeves or frames through walls and surfaces shall be done in a neat workmanlike manner. Openings shall be cut only as large as required for the installation; sleeves and/or frames installed flush with finished surfaces and grouted in place. Surfaces around openings shall be left smooth and finished to match surrounding surface.
B. Obtain written permission of the Architect/Engineer before cutting or piercing structural members. Use craftsmen skilled in their respective trades for cutting, fitting, repairing, patching of plaster, and finishing of materials including carpentry work, metal work or concrete work required for this work.
C. Do not weaken walls, partitions, or floors with cutting. Holes required to be cut in floors must be drilled without breaking out around the holes. The Architect/Engineer will determine suitability of patching and/or refinishing requirements.
D. The Fire Suppression Contractor is responsible for patching of all openings resulting from the installation or removal of fire Suppression equipment or materials.
E. Provide and maintain temporary partitions or dust barriers adequate to prevent the spread of dust and dirt to adjacent areas.
F. Patch existing finished surfaces and building components using new materials matching existing materials and experienced Subcontractors.
G. Fire and Smoke Partition Penetrations: The Contractor shall familiarize himself with all fire rated construction and install his work so as to maintain the integrity of the fire code rating. Maintain rating of fire rated and smoke rated construction. Seal annular space around conduits. For fire and smoke rated floors, walls and partitions, use UL listed material that maintains fire rated wall and floor integrity.

3.08 CLEANING AND REPAIR
A. Clean fire suppression parts to remove harmful materials.
B. Clean exposed surfaces of all pipe, equipment, and accessories of all dirt, debris, splatter, and other deleterious materials. Follow the manufacturer's recommendations for cleaning as applicable.
C. Repair or replace damaged pipe, equipment, and accessories, as directed by and to the satisfaction of the Architect, where marring or disfigurement has occurred. All pipe, equipment, and accessories shall be new.

3.09 TESTING AND INSPECTION
A. Upon completion, the entire system shall be tested under operating conditions.
1. All equipment shall be tested under service conditions and proven to operate properly and noiselessly.
2. All additional tests as required throughout this Specification shall be completed with results reported back to the Architect/Engineer for review.
B. Operate all equipment, after installation and connection. Inspect for improper connections and operation and correct deficiencies as required.
C. Inspection:
1. Upon completion of the work, the Contractor shall obtain certificates of inspection and approval from all City and State Authorities Having Jurisdiction.

3.10 PROJECT CLOSEOUT
A. Project Record Documents: At project closeout, provide one printed copy and one electronic copy of project record drawings to the Owner. Information contained on project record drawings shall include, as a minimum,:
1. Actual locations of all pipe, equipment, accessories, etc.
2. Actual pipe sizes and elevations.
3. Actual routing of all underfloor or below grade piping.
4. Hydraulic calculation remote area data and associated flow test information.
B. Operation and Maintenance Data: At project closeout, submit to the Architect two copies of descriptive literature, maintenance and operation data for all piping, equipment, accessories, and materials used. Include maintenance procedures, intervals, and parts list of each item installed under this contract. Include all manufacturer's guarantees and warranties. Also include:

END OF SECTION

SECTION 210500 - COMMON WORK RESULTS FOR FIRE SUPPRESSION

PART 1 GENERAL

1.01 SECTION INCLUDES
A. Pipe, fittings, valves, and connections for systems as applicable to this project. Sprinkler systems: New systems; Dry pipe systems; Wet pipe systems; Standpipe/hose systems; Below ground piping; Above ground piping.

PART 2 PRODUCTS

2.01 FIRE PROTECTION SYSTEMS
A. Water Supply Testing for All Systems: Perform tests of all supply water sources to determine the potential for corrosion in the fire protection system including tests for microbes most commonly associated with Microbiologically Influenced Corrosion (MIC). Water samples shall be collected as directed by the product literature of the testing organization. Samples shall be delivered to the approved testing laboratory within 72 hours of the time the water sample is obtained. Test results shall be forwarded to the Owner and Engineer along with a report summarizing the recommended corrective action to mitigate the potential for MIC or other types of corrosion.
B. The Contractor may use any of the following piping materials, at his option, provided the selected material meets with the approval of all State, local authorities and any utility company requirements. Verification of compliance of the selected piping material is the sole responsibility of the installing Contractor.

2.02 BURIED PIPING
A. Copper Tube: ASTM B 75 (ASTM B 75M) or ASTM B 88 (ASTM B 88M), 060 or 050 temper: Type: Type K (A); Fittings: ASME B16.18, cast copper alloy or ASME B16.22, wrought copper and bronze, solder joint, pressure type; Joints: AWS A5.8 Classification BCuP-3 or BCuP-4 copper/silver braze.
B. Cast Iron Pipe: AWWA C151/A21.51: Fittings: AWWA C110, standard thickness; Joints: AWWA C111, rubber gasket; Mechanical Couplings: Shaped composition sealing gasket, steel bolts, nuts, and washers.

2.03 ABOVE GROUND PIPING
A. Steel Pipe: ASTM A 795 Schedule 10, ASTM A 53 Schedule 40, ASTM A 135 Schedule 10, ASTM A 135 UL listed light wall type, or ASTM A 795 Schedule 40, black: Steel Fittings: ASME B16.9, wrought steel, buttwelded, ASME B16.5, buttweld ends, ASTM A 234/A 234M, wrought carbon steel or alloy steel, ASME B16.5, steel flanges and fittings, or ASME B16.11, forged steel socket welded and threaded; Mechanical Grooved Couplings: Malleable iron housing clamps to engage and lock, "C" shaped elastomeric sealing gasket, steel bolts, nuts, and washers; galvanized for galvanized pipe; Mechanical Formed Fittings: Carbon steel housing with integral pipe stop and O-ring pocked and O-ring, uniformly compressed into permanent mechanical engagement onto pipe; Schedule 10 steel pipe will not be allowed on any dry pipe sprinkler systems, no exceptions; Threaded or cut groove fittings will not be allowed on any Schedule 10 system, no exceptions.
B. Copper Tube: ASTM B 75 (ASTM B 75M) or ASTM B 88 (ASTM B 88M), H58 drawn temper: Type: Type M (C); Fittings: ASME B16.18, cast copper alloy or ASME B16.22, wrought copper and bronze solder joint, pressure type; Joints: AWS A5.8 Classification BCuP-3 or BCuP-4 copper/silver braze or ASTM B 32, alloy Sn95 solder.
C. CPVC Pipe: ASTM F 442/F 442M, SDR 13.5. (Not permitted in plenum return air ceiling spaces.): Fittings: ASTM F 438 Schedule 40, or ASTM F 439 schedule 80, CPVC; Joints: Solvent welded, using ASTM F 493 cement.

2.04 PIPE HANGERS AND SUPPORTS
A. Hangers for Pipe Sizes 1/2 to 1-1/2 inch: Malleable iron, adjustable swivel, split ring.
B. Hangers for Pipe Sizes 2 inches and Over: Carbon steel, adjustable, clevis.
C. Multiple or Trapeze Hangers: Steel channels with welded spacers and hanger rods.
D. Wall Support for Pipe Sizes to 3 inches: Cast iron hook.
E. Wall Support for Pipe Sizes 4 inches and Over: Welded steel bracket and wrought steel clamp.
F. Vertical Support: Steel riser clamp.
G. Floor Support: Cast iron adjustable pipe saddle, lock nut, nipple, floor flange, and concrete pier or steel support.
H. Copper Pipe Support: Carbon steel ring, adjustable, copper plated.

2.05 GATE VALVES
A. Up to and including 2 inches: Bronze body, bronze trim, rising stem, handwheel, solid wedge or disc, threaded ends.
B. Over 2 inches: Iron body, bronze trim, rising stem pre-grooved for mounting tamper switch, handwheel, OS&Y, solid bronze or cast iron wedge, flanged or grooved ends.
C. Over 4 inches: Iron body, bronze trim, non-rising stem with bolted bonnet, solid bronze wedge, flanged ends, iron body indicator post assembly.

2.06 BUTTERFLY VALVES
A. Bronze Body: Stainless steel disc, resilient replaceable seat, threaded or grooved ends, extended neck, handwheel and gear drive and integral indicating device, and built-in tamper proof switch rated 10 amp at 115 volt AC.
B. Cast or Ductile Iron Body: Cast or ductile iron, chrome or nickel plated ductile iron or aluminum bronze disc, resilient replaceable EPDM seat, wafer, lug, or grooved ends, extended neck, handwheel and gear drive and integral indicating device, and internal tamper switch rated 10 amp at 115 volt AC.

2.07 CHECK VALVES
A. Up to and including 2 inches: Bronze body and swing disc, rubber seat, threaded ends.
B. Over 2 inches: Iron body, bronze trim, swing check with rubber disc, renewable disc and seat, flanged ends.
C. 4 inches and Over: Iron body, bronze disc, stainless steel spring, resilient seal, threaded, wafer, or flanged ends.

2.08 DRAIN VALVES
A. Compression Stop: Bronze with hose thread nipple and cap.
B. Ball Valve: Brass with cap and chain, 3/4 inch hose thread.

PART 3 EXECUTION

3.01 PREPARATION
A. Ream pipe and tube ends. Remove burrs. Bevel plain end ferrous pipe. Remove scale and foreign material, from inside and outside, before assembly. Prepare piping connections to equipment with flanges or unions.

3.02 INSTALLATION
A. Install sprinkler system and service main piping, hangers, and supports in accordance with NFPA 13.
B. Install standpipe piping, hangers, and supports in accordance with NFPA 14.
C. Comply with all materials, design and installation requirements of Factory Mutual.
D. Route piping in orderly manner, plumb and parallel to building structure. Maintain gradient.
E. Install piping to conserve building space, to not interfere with use of space and other work.
F. Group piping whenever practical at common elevations.
G. Sleeve pipes passing through partitions, walls, and floors.
H. Install piping to allow for expansion and contraction without stressing pipe, joints, or connected equipment.
I. Inserts: Provide inserts for placement in concrete formwork; Provide inserts for suspending hangers from reinforced concrete slabs and sides of reinforced concrete beams; Provide hooked rod to concrete reinforcement section for inserts carrying pipe over 4 inches; Where concrete slabs form finished ceiling, locate inserts flush with slab surface; Where inserts are omitted, drill through concrete slab from below and provide through-bolt with recessed square steel plate and nut recessed into and grouted flush with slab.
J. Pipe Hangers and Supports: Install hangers to provide minimum 1/2 inch space between finished covering and adjacent work; Place hangers within 12 inches of each horizontal elbow; Use hangers with 1-1/2 inch minimum vertical adjustment. Design hangers for pipe movement without disengagement of supported pipe; Support vertical piping at every other floor. Support riser piping independently of connected horizontal piping; Where several pipes can be installed in parallel and at same elevation, provide multiple or trapeze hangers; Provide copper plated hangers and supports for copper piping.
K. Slope piping and arrange systems to drain at low points. Use eccentric reducers to maintain top of pipe level.
L. Where exposed to view in finished areas, prepare pipe, fittings, supports, and accessories for finish painting. Where pipe support members are welded to structural building framing, scrape, brush clean, and apply one coat of zinc rich primer to welding.
M. Do not penetrate building structural members unless indicated or where approval from the project Structural Engineer has been given in writing.
N. Provide sleeves when penetrating footings and floors. Seal and fire stop pipe and sleeve penetrations to achieve fire resistance equivalent to fire separation required.
O. When installing more than one piping system material, ensure system components are compatible and joined to ensure the integrity of the system. Provide necessary joining fittings. Ensure flanges, union, and couplings for servicing are consistently provided.
P. Install valves with stems upright or horizontal, not inverted. Remove protective coatings prior to installation.
Q. Provide drain valves at main shut-off valves, low points of piping and apparatus.

END OF SECTION

SECTION 210502 - TRENCHING AND BACKFILL FOR FIRE SUPPRESSION

PART 1 GENERAL

1.01 SECTION INCLUDES
A. Backfilling and compacting for utilities inside and outside the building.

1.02 PROJECT CONDITIONS
A. Provide sufficient quantities of fill to meet project schedule and requirements. When necessary, store materials on site in advance of need.
B. When fill materials need to be stored on site, locate stockpiles where designated: Separate differing materials with dividers or stockpile separately to prevent intermixing; Prevent contamination; Protect stockpiles from erosion and deterioration of materials.
C. Verify that survey bench marks and intended elevations for the Work are as indicated.
D. Protect bench marks, survey control points, existing structures, fences, sidewalks, paving, and curbs from excavating equipment and vehicular traffic.

PART 2 PRODUCTS

2.01 FILL MATERIALS
A. General Fill: Subsoil excavated on-site: Graded; Free of lumps larger than 3 inches, rocks larger than 2 inches, and debris.
B. Structural Fill: Subsoil excavated on-site: Graded; Free of lumps larger than 3 inches, rocks larger than 2 inches, and debris.
C. Granular Fill - Gravel: Pit run stone; free of shale, clay, friable material and debris.
D. Granular Fill - Pea Gravel: Natural stone; free of clay, shale, organic matter.
E. Sand: Natural river or bank sand; free of silt, clay, loam, friable or soluble materials, and organic matter.
F. Topsoil: Topsoil excavated on-site: Select; Free of roots, rocks larger than 1/2 inch, subsoil, debris, large weeds and foreign matter; Acidity range (pH) of 5.5 to 7.5; Containing a minimum of 4 percent and a maximum of 25 percent inorganic matter.

PART 3 EXECUTION

3.01 EXAMINATION
A. Identify required lines, levels, contours, and datum locations.
B. Locate, identify, and protect utilities and construction that remains and protect from damage.
C. Notify utility company to remove and relocate utilities not required by new construction.

3.02 TRENCHING
A. Slope banks of excavations deeper than 4 feet to angle of repose or less until shored.
B. Do not interfere with 45 degree bearing splay of foundations.
C. Remove large stones and other hard matter which could damage piping or impede consistent backfilling or compaction.
D. Stockpile excavated material to be re-used in area designated on site.
E. Remove excess excavated material from site.

3.03 PREPARATION FOR UTILITY PLACEMENT
A. Cut out soft areas of subgrade not capable of compaction in place. Backfill with general fill.
B. Compact subgrade to density equal to or greater than requirements for subsequent fill material.
C. Until ready to backfill, maintain excavations and prevent loose soil from falling into excavation.

3.04 BACKFILLING
A. Backfill to contours and elevations indicated using unfrozen materials.
B. Fill up to finish grade or slab elevations unless otherwise indicated.
C. Employ a placement method that does not disturb or damage other work.
D. Do not fill over porous, wet, frozen or spongy subgrade surfaces.
E. Maintain optimum moisture content of fill materials to attain required compaction density.
F. Granular Fill: Place and compact materials in equal continuous layers not exceeding 8 inches compacted depth.
G. Soil Fill: Place and compact material in equal continuous layers not exceeding 8 inches compacted depth.
H. Thrust bearing surfaces: Fill with concrete.
I. Compaction Density Unless Otherwise Specified or Indicated: Under paving, slabs-on-grade, and similar construction: 97 percent of maximum dry density; At other locations: 95 percent of maximum dry density.

3.05 BEDDING AND FILL AT SPECIFIC LOCATIONS
A. Use general fill unless otherwise specified or indicated.
B. Utility Piping, Conduits, and Duct Bank: Bedding: Use granular fill; Cover with general fill; Fill up to finish grade elevation; Compact in maximum 8 inch lifts to 95 percent of maximum dry density.

3.06 TOLERANCES
A. Top Surface of General Backfilling: Plus or minus 1 inch from required elevations.
B. Top Surface of Backfilling Under Paved Areas: Plus or minus 1 inch from required elevations.

3.07 FIELD QUALITY CONTROL
A. Perform compaction density testing on compacted fill in accordance with ASTM D1556, ASTM D2167, ASTM D2922, or ASTM D3017.
B. Evaluate results in relation to compaction curve determined by testing uncompacted material in accordance with ASTM D 698 ("standard Proctor"), ASTM D 1557 ("modified Proctor"), or AASHTO T 180.
C. If tests indicate work does not meet specified requirements, remove work, replace and retest.
D. Frequency of Tests: Every two feet.

3.08 CLEAN-UP
A. Leave unused materials in a neat, compact stockpile.
B. Remove unused materials, leave area in a clean and neat condition. Grade stockpile area to prevent standing surface water.
C. Leave borrow areas in a clean and neat condition. Grade to prevent standing surface water.

END OF SECTION

SECTION 210548 - VIBRATION AND SEISMIC CONTROLS FOR FIRE SUPPRESSION PIPING AND EQUIPMENT

PART 1 GENERAL

1.01 SECTION INCLUDES
A. Concrete housekeeping pads; Inertia bases for fire pumps; Vibration isolators; Seismic restraints.

PART 2 PRODUCTS

2.01 MANUFACTURERS
A. Isolation Technology, Inc; Kinetics Noise Control, Inc; Mason Industries.

2.04 SEISMIC RESTRAINTS
A. Type: Non-directional and double acting unit consisting of interlocking steel members restrained by neoprene elements.
B. Elements: Replaceable neoprene, minimum of 0.75 inch thick with minimum 1/8 inch air gap.
C. Capacity: 4 times load assigned to mount groupings at 0.4 inch deflection.
D. Attachment Points and Fasteners: Capable of withstanding 3 times rated load capacity of seismic snubber.

PART 3 EXECUTION

3.01 INSTALLATION
A. Install in accordance with manufacturer's instructions.
B. On closed spring isolators, adjust so side stabilizers are clear under normal operating conditions.
C. Support piping connections to equipment mounted on isolators using isolators or resilient hangers for scheduled distance: Up to 4 Inches Pipe Size: First three points of support; 5 to 8 Inches Pipe Size: First four points of support; 10 inches Pipe Size and Over: First six points of support; Select three hangers closest to vibration source for minimum 1.0 inch static deflection or static deflection of isolated equipment. Select remaining isolators for minimum 1.0 inch static deflection or 1/2 static deflection of isolated equipment.

3.02 FIELD QUALITY CONTROL
A. Inspect isolated equipment after installation and submit report. Include static deflections.

3.03 SCHEDULES
A. Pipe Isolation Schedule.
1. 1 Inch Pipe Size: Isolate 120 diameters from equipment.
2. 2 Inch Pipe Size: Isolate 90 diameters from equipment.
3. 3 Inch Pipe Size: Isolate 80 diameters from equipment.
4. 4 Inch Pipe Size: Isolate 75 diameters from equipment.
5. 6 Inch Pipe Size: Isolate 60 diameters from equipment.
6. 8 Inch Pipe Size: Isolate 60 diameters from equipment.

END OF SECTION

SECTION 210553 - IDENTIFICATION FOR FIRE SUPPRESSION PIPING AND EQUIPMENT

PART 1 GENERAL

1.01 SECTION INCLUDES
A. Nameplates; Tags; Stencils; Pipe Markers.

PART 2 PRODUCTS

2.01 MANUFACTURERS
A. Brady Corporation; Champion America, Inc; Seton Identification Products.

2.02 NAMEPLATES
A. Description: Laminated three-layer plastic with engraved letters: Letter Color: White; Letter Height: 1/4 inch; Background Color: Black.

2.03 TAGS
A. Plastic Tags: Laminated three-layer plastic with engraved black letters on light contrasting background color. Tag size minimum 1-1/2 inch diameter.
B. Metal Tags: Brass with stamped letters; tag size minimum 1-1/2 inch diameter with smooth edges.

2.04 STENCILS
A. Stencils: With clean cut symbols and letters of following size:
1. 3/4 to 1-1/4 inch Outside Diameter of Insulation or Pipe: 8 inch long color field, 1/2 inch high letters.
2. 1-1/2 to 2 inch Outside Diameter of Insulation or Pipe: 8 inch long color field, 3/4 inch high letters.
3. 2-1/2 to 6 inch Outside Diameter of Insulation or Pipe: 12 inch long color field, 1-1/4 inch high letters.
4. 8 to 10 inch Outside Diameter of Insulation or Pipe: 24 inch long color field, 2-1/2 inch high letters.
5. Equipment: 2-1/2 inch high letters.
B. Semi-gloss enamel, colors conforming to ASME A13.1.

2.05 PIPE MARKERS
A. Plastic Pipe Markers: Factory fabricated, flexible, semi- rigid plastic, preformed to fit around pipe or pipe covering; minimum information indicating flow direction arrow and identification of fluid being conveyed.
B. Plastic Tape Pipe Markers: Flexible, vinyl film tape with pressure sensitive adhesive backing and printed markings.

PART 3 EXECUTION

3.01 INSTALLATION
A. Install plastic and plastic tape pipe markers in accordance with manufacturer's instructions.
B. Identify pumps and valves with plastic nameplates. Small devices, such as in-line pumps, may be identified with tags.
C. Identify valves in main and branch piping with tags.

END OF SECTION

SECTION 210595 - FIRE STOPPING FOR FIRE SUPPRESSION SYSTEMS

PART 1 GENERAL

1.01 SECTION INCLUDES
A. Firestopping materials and Firestopping of all penetrations and interruptions to fire rated assemblies, whether indicated on the Drawings, and other openings indicated.

PART 2 PRODUCTS

2.01 FIRESTOPPING ASSEMBLIES
A. Firestopping: Any material meeting requirements: Fire Ratings: Use any system listed by UL or FM or tested in accordance with ASTM E 814 or ASTM E 119 that has F Rating equal to fire rating of penetrated assembly and minimum T Rating Equal to F Rating and that meets all other specified requirements.

2.02 MATERIALS
A. Elastomeric Silicone Firestopping: Single or multiple component silicone elastomeric compound and compatible silicone sealant; conforming to the following: Durability and Longevity: Permanent; Color: Manufacturer's standard color; Manufacturers: A/D Fire Protection Systems Inc; 3M Fire Protection Products; Specified Technologies, Inc.
B. Foam Firestoppping: Single or multiple component foam compound; conforming to the following: Durability and Longevity: Permanent; Color: Manufacturer's standard color; Manufacturers: A/D Fire Protection Systems Inc; 3M Fire Protection Products; Specified Technologies, Inc.
C. Fiber Packing Material: Mineral or ceramic fiber packing insulation; conforming to the following: Durability and Longevity: Permanent; Manufacturers: A/D Fire Protection Systems Inc; 3M Fire Protection Products; Pecora Corporation; Specified Technologies, Inc; USG.
D. Firestop Pillows: Formed mineral fiber pillows; conforming to the following: Durability and Longevity: Permanent; Manufacturers: A/D Fire Protection Systems Inc; Grace Construction Products; 3M Fire Protection Products; Nelson Firestop Products; Specified Technologies, Inc.

PART 3 EXECUTION

3.01 PREPARATION AND INSTALLATION
A. Clean substrate surfaces of dirt, dust, grease, oil, loose material, or other matter which may affect bond of firestopping material.
B. Install materials in manner described in fire test report and in accordance with manufacturer's instructions.
C. Install labeling required by code.

3.02 CLEANING AND PROTECTION
A. Clean adjacent surfaces of firestopping materials.
B. Protect adjacent surfaces from damage by material installation.

END OF SECTION

SECTION 211200 - FIRE-SUPPRESSION STANDPIPES

PART 1 GENERAL

1.01 SECTION INCLUDES
A. Standpipe system: Wet and Dry; Fire hose cabinets; Fire hose connection valve cabinets; Fire department connection; Fire extinguisher provisions in hose or standpipe cabinets.

PART 2 PRODUCTS

2.01 VALVES
A. Hose Station Valve: Angle type, brass finish, 1-1/2 inch nominal size with automatic ball drip; Hose Connection Valve: Angle type; brass finish; 2-1/2 inch size, thread to match fire department hardware, 300 psi working pressure, with threaded cap and chain of same material and finish;
B. Hose Connection Valve Cabinets: Style: Recessed or surface mounted as indicated on the Drawings; Tub: 16 gage thick steel, prepared for pipe and accessory rough-in; Door: 12 gage thick steel, flush, glazed with 6 mm thick wired glass full panel; hinged, positive latch device; Finish: Enameled, color as selected; Provide fire extinguisher compartment where indicated on the Drawings or required by local authorities. Cross reference architectural drawings with hose cabinet locations to determine where extinguisher locations coincide with hose cabinet locations.

2.02 FIRE DEPARTMENT CONNECTION
A. Type: Flush mounted wall type with brass finish; Outlets: Two way with thread size to suit fire department hardware; threaded dust cap and chain of matching material and finish; Drain: 3/4 inch automatic drip, outside; Label: "Standpipe - Fire Department Connection".

PART 3 EXECUTION

3.01 INSTALLATION
A. Install in accordance with manufacturer's instructions.
B. Install in accordance with NFPA 14.
C. Locate and secure cabinets plumb and level. Establish top of cabinet (inside horizontal) surface 66 inches above finished floor or as prescribed by the local fire department.
D. Connect standpipe system to water source ahead of domestic water connection.
E. Where static pressure exceeds 100 psi at any hose station, provide pressure reducing valve to prevent pressure on hose exceeding 90 psi.

3.02 FIELD QUALITY CONTROL
A. Test entire system in accordance with NFPA 14.
B. Test shall be witnessed by Fire Marshal and authority having jurisdiction.

END OF SECTION

SECTION 211300 - FIRE-SUPPRESSION SPRINKLER SYSTEMS

PART 1 GENERAL

1.01 SECTION INCLUDES
A. Wet-pipe sprinkler system; Dry-pipe sprinkler system; Dry pendant sprinklers; System design, installation, and certification; Fire department connections.

PART 2 PRODUCTS

2.01 SPRINKLER SYSTEM
A. Sprinkler System: Provide coverage for entire building unless noted otherwise on the Drawings.
B. Occupancy: As required by NFPA hazard classifications or as indicated on the Drawings whichever is more stringent.
C. Water Supply: Determine volume and pressure from water flow test data.
D. Interface system with building fire and smoke alarm system.
E. Provide fire department connections in the location(s) indicated on the Drawings and as approved by the local authority.

2.02 SPRINKLERS
A. All Sprinkler Fusible Links: Fusible solder link type or glass bulb type, temperature rated for specific area hazard.
B. Suspended Acoustical Ceiling Type: Semi-recessed pendant type with matching push on escutcheon plate; Finish: Chrome plated; Escutcheon Plate Finish: Chrome plated.
C. Hard Surface Ceiling Type: Recessed pendant type with flush cover plate; Finish: Brass, Chrome or Enamel; Cover and Escutcheon Plate Finish: Chrome or Enamel, color as selected from manufacturer's colors; Adjustment: 1/2" minimum.
D. Exposed Area Type: Standard upright type; Finish: Brass.
E. Sidewall Type: Semi-recessed horizontal sidewall type with matching push on escutcheon plate; Finish: Chrome plated.or Enamel, color as selected from manufacturer's standard colors; Escutcheon Plate Finish: Chrome plated.
F. Dry Sprinklers: Standard pendant type with matching push on escutcheon plate with flush cover plate; Finish: Chrome Plated or Enamel, color as selected.from manufacturer's standard colors; Escutcheon Plate Finish: Chrome Plated or Enamel, color as selected.from manufacturer's standard colors.
G. Dry Pendant Sprinklers: Semi-recessed pendant type, with matching push on escutcheon plate; Finish: Chrome Plated or Enamel, color as selected.from manufacturer's standard colors; Escutcheon Plate Finish: Chrome Plated or Enamel, color as selected.from manufacturer's standard colors.
H. Guards: Finish to match sprinkler finish.

2.03 PIPING SPECIALTIES

ktgy

17911 Von Karman Ave.
Suite 200
Irvine, CA 92614
ktgy.com
949.851.2133

ktgy Project Number
Contact DORINA WATSON
Email dwatson@ktgy.com
Senior Director DAVID SCHMITZ
Designer RUSSEL ROSALES

Developer
SEDC
23906 SOBOBA ROAD
SAN JACINTO, CA 92581

PHONE: (951) 663-2058

SOBOBA SOVOVATUM VILLAGE PHASE-2

SAN JACINTO, CA

No.	DATE	DESCRIPTION

Client is responsible for notifying architect in writing for any discovered errors or omissions in the plans and specifications during construction of the project. Failure for Client to notify Architect of any known errors or omissions in the plans or specifications, and proceeding with constructing the portion of work shown in the plans or specifications containing known errors or omissions shall be a waiver by Client for any liability of Architect for such known errors or omissions. Client releases Architect for any liability for such portions of work, and Architect shall not be liable for any delay damages, change orders, repair costs, removal or demolition costs, or replacement of any such portions of work.

2026-05-26, ISSUED FOR BID

Sheet Name
FIRE SPRINKLER SPECIFICATIONS

Schnackel engineers
New York ■ Miami ■ Omaha ■ Los Angeles ■ Seattle ■ Honolulu
800-581-0963 www.schnackel.com

P4-11

SE JOB#: 250720

COPYRIGHT 2024 KTGY GROUP INC. These plans and specifications are protected by United States copyright law and may not be used, reproduced, distributed, transmitted, displayed, or modified in any way without the prior written consent of KTGY Group, Inc. or the authorized copyright holder or licensee.

A. Dry Pipe Sprinkler Alarm Valve: Check type valve with divided seat ring, rubber faced clapper to automatically actuate water motor alarm and electric alarm, with accelerator; with test and drain valve.
B. Electric Alarm: Electrically operated red enameled gong with pressure alarm switch.
C. Water Flow Switch: Vane type switch for mounting horizontal or vertical, with two contacts; rated 10 amp at 125 volt AC and 2.5 amp at 24 volt DC.
D. Fire Department Connections: Type: Flush mounted wall type with chrome plated finish; Outlets: Two way with thread size to suit fire department hardware; threaded dust cap and chain of matching material and finish; Drain: 3/4 inch automatic drip, outside; Label: "Sprinkler - Fire Department Connection".
E. Supervisory Switches: As required by NFPA and Local Authorities.

2.04 AIR COMPRESSOR
A. Compressor: Single unit, electric motor driven, motor, motor starter, safety valves, check valves, air maintenance device incorporating electric pressure switch and unloader valve.
B. Electrical Characteristics: 120 volts, single phase, 60 Hz.

PART 3 EXECUTION

3.01 INSTALLATION
A. Install in accordance with referenced NFPA design and installation standard.
B. Install equipment in accordance with manufacturer's instructions.
C. Install buried shut-off valves in valve box. Provide post indicator.
D. Provide approved backflow preventer assembly at sprinkler system water source connection.
E. Locate fire department connection with sufficient clearance from walls, obstructions, or adjacent siamese connectors to allow full swing of fire department wrench handle.
F. Locate outside alarm gong or horn/strobe on building wall as indicated or required by local jurisdiction.
G. Place pipe runs to minimize obstruction to other work.
H. Place piping in concealed spaces above finished ceilings.
I. Center sprinklers in two directions in ceiling tile and provide piping offsets as required.
J. Center all sprinklers symmetrically with respect to all soffits, light fixtures, air diffusers and other ceiling features. Approval of the Architect and Engineer at shop drawing review will be required for all sprinkler head layouts. Provide offsets and adjustments as required by the Architect/Engineer's review comments.
K. Apply masking tape or paper cover to ensure concealed sprinklers, cover plates, and sprinkler escutcheons do not receive field paint finish. Remove after painting. Replace painted sprinklers.
L. Install air compressor on vibration isolators.
M. Flush entire piping system of foreign matter.
N. Install guards on sprinklers where exposed to damage.
O. Hydrostatically test entire system.
P. Require test be witnessed by Fire Marshal and authority having jurisdiction.

3.02 INTERFACE WITH OTHER PRODUCTS
A. Ensure required devices are installed and connected as required to fire alarm system.
B. Verify that proper power supply is available prior to ordering equipment. Verify proper voltage, phase and current rating of power supply and inform Engineer of any deviations prior to order, connection of equipment or start-up. Responsibility for verification of proper power supply voltage and any product returns or damage resulting from incorrect connections shall rest with this Contractor.

END OF SECTION

SECTION 212200 - CLEAN-AGENT FIRE EXTINGUISHING SYSTEMS

PART 1 GENERAL

1.01 SECTION INCLUDES
A. Fire detection system; Control and supervision systems; Extinguishing agent storage and distribution suppression system; System maintenance.

1.02 SYSTEM DESCRIPTION
A. Fire Protection System: Total flooding of hazard area with fire extinguishing agent, to extinguish fire, complying with NFPA 2001.
B. System is fixed installation with equipment designed and installed to provide fire-extinguishing capability for underfloor, occupied area, and ceiling space of rooms as indicated on the Drawings.
C. Locate extinguishing agent supply near each hazard area.
D. Interface system with building fire alarm system.
E. Provide total flooding of fire extinguishing agent concentration by volume, in maximum 10 seconds, for period of 10 minutes with 10 percent allowance for room leakage.

PART 2 PRODUCTS

2.01 PIPE AND PIPING SPECIALTIES
A. Steel Pipe: ASTM A 53/A 53M or ASTM A 106 Schedule 40, or ASTM A 135/A 135M Schedule 10, black; Fittings: ASME B16.3 malleable iron class 300 for sizes 2 inch and smaller, or ASTM A 234/A 234M, wrought steel welding type fittings; Joints: Threaded, AWS D1.1 welded, or grooved and shouldered pipe end couplings.
B. Pipe Hangers: ASME B31.1, UL approved for sprinkler systems, split clamp up to 2-1/2 inch size, riser clamps over 2-1/2 inch size, adequate to offset discharge thrust.
C. Escutcheons: Chrome plated pressed or stamped brass, one-piece or split pattern, minimum 2 inches larger than opening.
D. Gages: ASME B40.100 3-1/2 inch diameter cast aluminum case, phosphor bronze bourdon tube, rotary brass movement, brass socket, front re-calibration adjustment, black figures on white background, 1 percent mid-scale accuracy, scale calibrated in psi.

2.02 STORAGE CYLINDERS
A. Cylinders: Standard model and size for ease of replacement and addition. Design, fabricate, certify, and stamp cylinders in accordance with ASME Section VIII.
B. Contents: Fill cylinders with required fire extinguishing agent. Pressurize with dry nitrogen to 360 psi plus or minus 5 percent total pressure at 70 degrees F.
C. Identification: Permanent plate, specifying agent, tare and gross weight, pounds of fire extinguishing agent, and pressurization level; installed so plate is visible and readable.
D. Safety Release: Equip cylinders with frangible disc safety device.
E. Fire Extinguishing Agent: Per local code or NFPA 2001.
F. Cylinder Valves: Heavy duty forged brass, incorporating safety release pressure operated manual control, solenoid discharge valve, and pressure gage. Provide solenoid pilot valves for each cylinder or bank of cylinders.

2.03 MANUAL STATIONS
A. Pull Station: Semi-flush housing fitted with single action control "pull down" lever that locks in position after releasing spring-loaded contact switch, for mounting on electrical outlet box.
B. Labeling: Locate engraved label adjacent to each manual pull station, indicating area protected, and that actuation will cause discharge of fire extinguishing agent.
C. System Abort Switch: Stainless steel plate with momentary contact push button, countdown timer, magnetic door holders manual release, for mounting on electrical outlet box.

2.04 DETECTORS
A. Photoelectric Detectors: NFPA 72, UL listed, adjustable sensitivity, with LED light source and photocell, activated by smoke, plug-in, twist-lock unit easily removed from base.
1. Amplifier-Switching Circuit and Indicator Lamp: Solid state, two-wire operating on detector line voltage. On alarm, unit shall lock and be reset at control panel.
2. Adjustment: Manual for normal or high sensitivity, with sensitivity setting visible and requiring no special tools.
3. Base Assembly: Twist-lock type with screw terminals, lamp to indicate alarm, security base lock, and relay contactor.

2.05 DISCHARGE NOZZLES
A. Discharge: To provide required rates of discharge and coverage and to distribute extinguishing agent uniformly throughout protected area.
B. Construction: One piece chrome plated brass or aluminum nozzle with textured finish with female pipe thread integral on body. Direct discharge parallel to ceiling.

2.06 CONTROL CABINET
A. Approved as alarm and releasing device, with solid state internal circuitry enclosed in NEMA ICS 6, Type 1 cabinet.
B. Provide supervision to NFPA 72, Class A of following circuits for wire break or ground faults: Zone detection loops; Remote manual discharge stations; Suppression system solenoid valves; Power supply and circuit wiring and fuse; Battery interconnecting wires and fuse; Alarm in abort mode.
C. Equip panel with following standard features: Visual and audible annunciation of trouble or alarm signals; Panel reset switch; Trouble alarm silence switch with ring back feature; Single zone detection: cross zone (optional); Battery test meter and switch; Manual discharge switch; Deadman abort switch; Programmable timers for pre-discharge and discharge, 0 to 60 second cycle; Isolated relay contactors for external alarm or equipment and ventilation shutdown; Relay contactors for general trouble signal; Relay contactor activated by detector zone board in alarm or trouble mode.
D. Provide nickel cadmium batteries and charger for continuous operation of detection, alarm, actuation and supervision functions for 24 hours. Provide automatic battery switch-over upon failure of primary power supply.
E. Conceal control switches and indicators, with exception of Power On, Master Trouble, Supervisory Trouble, Circuit 1 Alarm, Circuit 2 Alarm and Release Indicators. Provide the following annunciation: Power On: Green; System Trouble: Amber; Battery Trouble: Amber; Circuit 1 Trouble: Amber; Circuit 2 Trouble: Amber; Ground Fault: Amber; Release trouble: Amber; Alarm Circuit 1: Red; Alarm Circuit 2: Red; Agent Release: Red; Alarm Silence: Amber; Battery Polarity: Amber; Abort Trouble: Amber; Alarm Output Trouble: Amber; Supervisory Trouble: Amber;

2.07 MISCELLANEOUS EQUIPMENT
A. Alarm Horns: 24 volts, with supervision of circuit wiring, with minimum sound level of 90 dba at 10 feet, for mounting on 4 inch electrical outlet box.
B. Strobe Beacon: Manufacturer's standard design, 24 volts, with system identification on strobe lens.
C. Motorized Fire Dampers: Refer to Section 23 0913.

2.08 OPERATING SEQUENCE
A. Actuation of one detector in either zone circuit: Illuminate zone indicator; Energize alarm bell; Shut down air-conditioning system and close dampers; Close doors to area; Signal building fire alarm system.
B. Actuation of second detector on second zone circuit: Illuminate zone indicator; Energize alarm horn; Shut down power to protected equipment; Actuate time delay for up to 30 seconds; Release extinguishing agent into protected area; If abort switch is engaged, delay release; Upon abort switch disengagement release extinguishing agent unless system cleared and reset.
C. Discharge of Extinguishing Agent: Sounds alarm bells and horns and Operates strobes.

PART 3 EXECUTION

3.01 EXAMINATION
A. Verify that enclosing walls are continuous above ceilings and below raised floors to enable required concentration to be built up and maintained for required time to ensure fire is extinguished.

3.02 INSTALLATION
A. Install in accordance with applicable codes and NFPA 2001.
B. Route piping in orderly manner, concealed, plumb and parallel to building structure, and maintain gradient. Install piping to conserve building space, and not interfere with use of space and other work.
C. Securely support piping in accordance with ASME B31.1 with allowance for fire extinguishing agent thrust forces, and thermal expansion and contraction.
D. Use grooved mechanical couplings and fasteners only in accessible locations. Roll groove piping only.
E. Install unions downstream of valves and at equipment or apparatus connections.
F. Prepare pipe, fittings, supports, and accessories for finish painting.
G. Identify in accordance with NFPA 2001 requirements. Place directional arrows and system labels wherever piping changes direction and minimum 20 feet on straight runs.
H. In rooms with suspended ceiling tiles, clip or retain tiles within 4 foot radius of the nozzles to prevent lifting during discharge.
I. Install wiring in accordance with Equipment Wiring requirements.
J. Make final connections between equipment and system wiring under direct supervision of factory trained representative of manufacturer.
K. Install engraved plastic instruction plate, detailing emergency procedures, at control panel and at each manual discharge and abort switch location. At control panel identify control logic units, contacts, and major circuits with permanent nameplates.
L. Locate remote manual releases at one or more doors to protect area where indicated. Locate dead-man abort switch adjacent.
M. Locate strobe units and abort station at all points of entrance to protected area.

3.03 INTERFACE WITH OTHER PRODUCTS
A. Provide interlock with automatic closing door releases and motorized dampers.
B. Provide signal to building fire alarm system.

3.04 FIELD QUALITY CONTROL
A. Manufacturer Services: Provide experienced manufacturer's field engineer to supervise installation and performance testing of the system.
B. Test distribution piping and valving, prior to nozzle installation, to 50 psi air pressure test. Inspect joints using soap water solution or halide torch or lamp. Repair leaks and retest. Maintain test pressure for four hours.
C. Test circuits including automatic discharge, manual discharge, equipment shut-down, alarm devices, and storage container pressure. Test supervision of each circuit.
D. Check each detector with a sensitivity meter, adjust. Record sensitivity, and include record in test report.
E. Pressure test entire enclosure with test fan, pressurizing protected area both under positive and negative conditions. Confirm that leakage is within system design allowance.

3.05 DEMONSTRATION AND INSTRUCTIONS
A. Demonstrate that components, except cylinder discharge assembly, are functioning properly and in conjunction with controls system.
B. Submit integrated step-by-step test procedure for approval 30 days prior to start of demonstration.
1. Arrange meeting prior to demonstration with representatives of Owner, Owner's underwriter, and the installer.
2. Perform visual inspection and overall review of system installed.
3. Place minimum of three UL-listed recording analyzers in space. Provide certification that testing devices have been checked by recognized testing authority within two weeks of date of demonstration.
4. Certify that replacement charge can be provided within 24 hours of demonstration.
C. Discharge system using manual-release switch mounted on control panel. Run discharge test with compressed nitrogen at 360 psi. After discharge, check cylinders for complete pressure release.
D. After satisfactory completion of discharge test, fill cylinders with amount of fire extinguishing agent specified in design calculations.

3.06 MAINTENANCE
A. Provide inspections and maintenance performed by competent personnel in the employ of the system installer.
B. Conduct inspections at 6 months and 12 months from date of Substantial Completion to verify proper operation of system, check agent container weight and pressure, and a thorough check of controls, detection and alarm systems.
C. Remedy of all deficiencies shall be included at no extra cost to Owner except for replacement of agent due to discharge under normal use or damage due to abuse.
D. Submit documents certifying satisfactory system conditions. Include manufacturer's certificate of acceptance of inspector's qualifications.

END OF SECTION

Schnackel engineers
New York ■ Miami ■ Omaha ■ Los Angeles ■ Seattle ■ Honolulu
800-581-0963 www.schnackel.com

ktgy
17911 Von Karman Ave.
Suite 200
Irvine, CA 92614
ktgy.com
949.851.2133

ktgy Project Number

Contact	DORINA WATSON
Email	dwatson@ktgy.com
Senior Director	DAVID SCHMITZ
Designer	RUSSEL ROSALES

Developer
SEDC
23906 SOBOBA ROAD
SAN JACINTO, CA 92581

PHONE: (951) 663-2058

SOBOBA SOVOVATUM VILLAGE PHASE-2

SAN JACINTO, CA

No.	DATE	DESCRIPTION

Client is responsible for notifying architect in writing for any discovered errors or omissions in the plans and specifications during construction of the project. Failure for Client to notify Architect of any known errors or omissions in the plans or specifications, and proceeding with constructing the portion of work shown in the plans or specifications containing known errors or omissions shall be a waiver by Client for any liability of Architect for such known errors or omissions. Client releases Architect for any liability for such portions of work, and Architect shall not be liable for any delay damages, change orders, repair costs, removal or demolition costs, or replacement of any such portions of work.

2026-05-26, ISSUED FOR BID

Sheet Name
FIRE SPRINKLER SPECIFICATIONS

P4-12

SE JOB#: 250720

COPYRIGHT 2024 KTGY GROUP INC. These plans and specifications are protected by United States copyright law and may not be used, reproduced, distributed, transmitted, displayed, or modified in any way without the prior written consent of KTGY Group, Inc. or the authorized copyright holder or licensee.

SECTION 22000 - PLUMBING GENERAL CONDITIONS

PART 1 GENERAL
1.01 SUMMARY
A. This section supplements all sections of the Specifications for Division 22 and shall apply to all phases of work hereinafter specified, shown on the Contract Documents, or required to provide a complete installation of approved plumbing systems.
B. The Drawings, General Conditions and General Provisions of the Contract apply to this Section and the other Sections of Division 22 of the specifications. Where conflicts arise between these documents, the more stringent provision will be applicable, subject to the interpretation of the Engineer.
C. Furnish all labor, material, services, and skilled supervision necessary for the construction, erection, installation, connections, testing, and adjustment of all materials and plumbing equipment specified herein, or shown or noted on the Drawings, and its delivery to the Owner, complete in all respects and ready for use.
D. Products furnished but not installed under this section:
1. Where plans indicate fixtures or equipment will be furnished by this Contractor for installation by other Contractors, this Contractor shall furnish all such equipment, complete in all respects and ready for installation.
2. Drawings, instructions, and manuals supplied with equipment furnished under Division 22, but installed under other Divisions shall be carefully preserved and turned over to the installing Contractor.
E. Products installed but not furnished under this section:
1. Where plans indicate fixtures or equipment will be furnished by others, this Contractor shall provide all rough-in and supplies and shall connect such equipment to the plumbing systems.
2. Drawings, instructions, and manuals supplied with equipment furnished under separate Divisions but installed under Division 22 shall be carefully preserved and turned over to the Architect.
1.02 DEFINITIONS
A. "Work" is hereby defined as, "The construction and services required by the Contract Documents whether completed or partially completed and includes all labor, materials, equipment, and services provided or to be provided by the Contractor to fulfill the Contractor's obligations. The work may constitute the whole or a part of the project."
B. "Furnish" is hereby defined as, "To supply and deliver, unload, and inspect for damage."
C. "Install" is hereby defined as, "To unpack, assemble, erect, apply, place, finish, cure, protect, clean, connect, and place into operation into the work."
D. "Provide" is hereby defined as, "To furnish and install."
E. "Connect" is hereby defined as, "To bring service to the equipment and make final attachment including necessary switches, outlets, boxes, terminations, etc."
F. "Concealed" is hereby defined as, "Hidden from sight in chases, furred spaces, shafts, hung ceilings, embedded in construction, in crawl spaces, or buried."
G. "Exposed" is hereby defined as, "Not installed underground nor concealed as defined by the Specifications."
H. "Drawings" is hereby defined as, "All plans, details, equipment schedules, diagrams, sketches, etc. issued for the construction of the work."
I. Subgrade Elevations: 4 inches below finish grade elevations indicated on drawings, unless otherwise indicated.
J. Finish Grade Elevations: 4 inches above subgrade elevations indicated on drawings, unless otherwise indicated.
1.03 CODES AND STANDARDS
A. Perform work in accordance with the applicable Building Code, Electrical Code, Fire Code, Mechanical Code, Plumbing Code, Energy Code, and all other applicable codes, amendments, and ordinances. Also perform all work in accordance with the Americans with Disabilities Act (ADA) and the Authority Having Jurisdiction (AHJ) including Fire Marshal(s).
B. Perform work in accordance with Landlord requirements, including any Tenant Criteria Manuals and Lease Exhibits, where applicable.
C. Perform work in accordance with the applicable utility companies serving the project. Make all arrangements with the utility companies for proper coordination of the work.
D. Recognized Standards: Design, manufacture, testing and method of installation of all apparatus and materials furnished under the requirements of these Specifications shall conform to the latest publications or standard rules of Underwriters Laboratories, Inc. (U.L.), American Society for Testing and Materials (ASTM), American National Standards Institute (ANSI), and National Electrical Code (NEC).
E. The Contract Documents shall take precedence where the Contract Documents exceed code, Landlord, utility, or recognized standards requirements.
1.04 PERMITS AND FEES
A. Permits, licenses, fees, inspections and arrangements required for the work under this Contract shall be obtained by the Contractor at his expense, unless otherwise indicated.
B. All fees and scheduling associated with obtaining an accurate water flow test shall be at the Contractor's expense.
1.05 CONTRACT DRAWINGS
A. The Contractor is responsible to obtain, fully understand, and coordinate the work with the complete set of Contract Documents. Any required corrections, including all associated costs, arising from issues caused by the Contractor's failure to understand and/or coordinate the work with the complete set of Contract Documents are the Contractor's sole responsibility.
B. Work under these sections is diagrammatic unless indicated otherwise and is intended to convey the scope of work and indicate the general arrangement of piping, equipment, and accessories. Follow these drawings in laying out the work and verify spaces for the installation of these materials and equipment. Wherever a question exists as to the exact intended location of pipe, sprinklers, or equipment, obtain instructions from the Architect before proceeding with the work.
C. Notify the Architect/Engineer for resolution if a discrepancy is discovered within the Contract Documents. Failure of the Contractor to notify the Architect/Engineer of discrepancies shall result in the resolution becoming the Contractor's responsibility and subject to the Architect/Engineer's review and possible rejection. Should the Architect/Engineer reject a discrepancy resolution of which they were not notified, the Contractor is fully responsible to correct the installation, including all associated costs, until approval of the installation is given by the Architect/Engineer.
1.06 EXISTING CONDITIONS
A. Verify all existing conditions prior to beginning work.
B. Any existing conditions indicated in the Contract Documents are based on information drawings provided by others and possibly limited field verification. The Contractor shall adjust for actual field conditions at no additional expense to the Owner.
C. The Contractor shall visit the project site, review existing conditions against the Contract Documents, and familiarize himself with the work prior to bidding and start of the work. By signing the Contract, the Contractor acknowledges the site visit has been completed and the existing conditions are accepted.
D. The Contractor shall notify the Architect of major discrepancies in writing so the appropriate modifications to the design can be made without delay to the project. The Contractor assumes full responsibility of adjusting for discrepancies of which the Architect is not informed.
E. The Owner shall have first salvage right on all demolished equipment and materials. The Contractor shall dispose of all demolished equipment and materials the Owner rejects.
F. The Contractor shall notify the Architect/Engineer of field discrepancies in writing so the appropriate modifications to the design can be made without delay to the project. The Contractor assumes full responsibility of adjusting for discrepancies of which the Architect/Engineer is not informed.
G. Where connections are made between new work and existing work, the connections shall be made by using materials and methods to suit the actual conditions.
H. Where existing conditions are shown to be removed, by means of a hatched pattern, on the Drawings, this Contractor shall perform all work required for removal. Existing pipe run-outs shall be removed all the way back to mains and capped using appropriate methods.
I. Where existing work is to be modified, it shall be done in conformance with these specifications. Materials used shall be same as existing except where specified otherwise.
1.07 SUBMITTALS FOR ENGINEER REVIEW:
A. Furnish the following submittals to the architect for review by the Engineer:
1. Product data, locations, and calculations for expansion fittings and loops for plumbing piping.
2. Product data for meters and gauges for plumbing piping.
3. Product data for vibration and seismic controls for plumbing piping and equipment.
4. Product data for plumbing piping insulation.
5. Product data for piping safety covers.
6. Product data for plumbing piping.
7. Product data for plumbing piping specialties.
8. Product data for plumbing equipment.
9. Product data for plumbing fixtures.
B. Use manufacturer's specification sheets identified by number indicated on drawings or schedules.
C. Indicate catalog number on the cut sheets.
D. Submittals other than those listed above will not be reviewed and will be returned stating such.
E. Submittals are reviewed only for general compliance with the Contract Documents. Dimensions, quantities and details are not checked during submittal review. Review of the submittals does not relieve the Contractor of the responsibility for providing all materials, equipment and accessories necessary for a complete and operational system meeting the requirements of the project and the intent of the Contract Documents. The responsibility for coordination of substituted materials and equipment lies solely with the substituting Contractor.
1. Approval shall not relieve the Contractor from responsibility for errors on the shop drawings.
2. If the shop drawings deviate from the contract documents, the Contractor shall advise the Engineer of the deviations in writing accompanying the shop drawings, including the reasons for the deviations.
1.08 QUALITY ASSURANCE
A. Manufacturer Qualifications: Company specializing in manufacturing the Products specified in this section with minimum five years of experience.
B. Installer Qualifications: Company specializing in performing the work of this section with minimum five years of experience. Approved by manufacturer.
C. Products:
1. Listed and classified by Underwriters Laboratories Inc. as suitable for the purpose specified and indicated.
2. Listed and classified by the local Department of Buildings and furnished with an acceptance number, where applicable.
3. Listed and classified by the Landlord's and/or Owner's insurance carrier, where applicable.
D. All equipment and components shall be free of all rust/corrosion or any visible damage. All items not complying with this requirement shall be replaced without any change in the Contract amount.
E. Equipment performance and accessories shall be as scheduled on the Drawings and specified herein. Inclusion in both locations is not a prerequisite to inclusion in the Contract. Equipment and accessories specified in either location shall be included in the Contract. Provide all necessary accessories and connections as required for a complete, functional system, including all required components reasonably inferred to as necessary although such components may or may not be specifically indicated in the Contract Documents.
F. Code or utility company requirements shall supersede any conflicting requirements of this section.
G. Fill Composition Test Reports: Results of laboratory tests on actual materials used; Compaction Density Test Reports.
1.09 DELIVERY, STORAGE, AND HANDLING
A. Deliver and store valves in shipping containers, with labeling in place.
B. Provide temporary protective coating on cast iron and steel valves.
C. Provide temporary end caps and closures on piping and fittings. Maintain in place until installation.
D. Protect motors stored on site from weather and moisture by maintaining factory covers and suitable weather-proof covering. For extended outdoor storage, remove motors from equipment and store separately.
E. Equipment: Protect equipment from physical damage by storing off site until the project is ready for immediate installation. Provide temporary caps on all pipes to prevent debris from entering the pipe.
1.10 WARRANTY AND GUARANTEE
A. Additional warranty and guarantee terms in excess of this requirement are specified within the individual sections of Division 22.
B. Provide five year manufacturer warranty for domestic water heaters and packaged water heating systems.
C. Provide one year manufacturer warranty for pumps.

PART 2 PRODUCTS
2.01 SUBSTITUTIONS
A. The manufacturers listed are listed to set minimum standards for quality, design, and functionality. The products of other manufacturers may be submitted, at the Contractor's option, during shop drawing review unless indicated otherwise. The products of other manufacturers shall meet or exceed all requirements of the Contract Documents. The Contractor accepts all responsibility for costs and coordination issues arising out of the substitution of materials or equipment, and the coordination of such substitutions with all other contractors and subcontractors.

PART 3 EXECUTION
3.01 COORDINATION OF WORK
A. Examine the Contract Documents as a whole for the work of other trades. Coordinate all work accordingly.
B. Work lines and established heights shall be in strict accordance with architectural drawings and specifications insofar as these drawings and specifications extend. Verify all dimensions shown and establish all elevations and detailed dimensions not shown.
C. Promptly report to the Architect any delay or difficulties encountered in the installation of the work, which might prevent prompt and proper installation, or make it unsuitable to connect with or receive the work of others. Failure to so report shall constitute an acceptance of the work of other trades as being fit and proper for the execution of this work.
D. Plan, lay out, and coordinate the work with all trades well enough in advance so that it proceeds with a minimum of interference to work that has not been completed and work that is in progress. Inform all trades of openings required for the work and provide all special frames, sleeves, and anchor bolts required. The fire suppression system layout may be altered to suit the conditions, prior to the installation of any work and without additional cost to the Owner. Conflicts arising from lack of coordination shall be this Contractor's responsibility.
E. Wherever pipe runs in or above ceilings or walls, the Contractor shall arrange the run of pipe in such a manner that it does not interfere with grilles, diffusers, outlet boxes, luminaires, or other ceiling mounted items.
F. Install systems, materials and equipment to provide for maximum headroom, where no ceiling height is established or indicated on the Drawings. Maintain access to equipment requiring service when selecting mounting elevations.
G. Install systems, materials and equipment level and plumb, parallel and perpendicular to building lines where exposed to view, unless otherwise indicated.
H. Conflicts arising from lack of coordination shall be this Contractor's sole responsibility. The Plumbing Contractor shall pay for all extra cutting and patching made necessary by his failure to properly direct such work at the correct time.
I. Perform all work in conformity with the Contract Documents and afford other trades reasonable opportunity for the execution of their work. Properly connect and coordinate this work with the work of other trades at such time and in such a manner as not to delay or interfere with their work.
J. Manufacturer's instruction sheets shall be followed explicitly in the installation of all equipment. Where manufacturer's instruction sheets conflict with requirements of these specifications or the Drawings, such conflicts shall be brought to the attention of the Architect/Engineer for clarification.
K. All roofing penetrations shall be flashed and weather sealed by the roofing manufacturer's authorized roofing contractor at this Contractor's expense. This Contractor shall contract with the factory authorized roofing contractor for the specific roofing system applicable to this Project. The use of an unauthorized roofing contractor may result in removal and replacement of the penetration systems at this Contractor's expense.
L. Although all such work is not specifically indicated, furnish and install all supplementary or miscellaneous items, appurtenances and devices incidental to or necessary for a sound, secure and complete installation.
M. Verify and coordinate requirements and installation details of all materials and equipment that are to be furnished under other Divisions and installed or connected under Division 22 prior to rough-in. Conflicts arising from lack of coordination shall be this Contractor's responsibility. As such, the Contractor is responsible to:
1. Obtain and review shop drawings, product data, manufacturer's wiring diagrams, and manufacturer's instructions for equipment furnished under other sections.
2. Determine connection locations and requirements.
3. Sequence rough-in of plumbing connections to coordinate with installation of equipment.
N. Utilize galvanized steel hangers and supports in all wet, damp, and corrosive environments, including all exterior locations.
3.02 COORDINATION DRAWINGS
A. Prepare coordination drawings to a scale of 1/4"=1'-0" or larger; detailing major elements, components, and systems of plumbing equipment and materials in relationship with other systems, installations, and building components. Indicate location where space is limited for installation and maintenance, where sequencing and coordination of installations are of importance to the efficient flow of the work, including (but not necessarily limited to) the following:
1. Indicate the proposed locations of conduits, equipment, and materials. Include the following:
a. Clearances required for maintaining Code required working space.
b. Equipment connections and support details.
c. Exterior wall and foundation penetrations.
d. Fire-rated wall and floor penetrations.
e. Sizes and location of required concrete pads and bases.
f. Indicate scheduling, sequencing, movement, and positioning of large equipment into the building during construction.
g. Prepare floor plans, elevations, and details to indicate penetrations in floors, walls, and ceilings and their relationship to other penetrations and installations.
3.03 EXAMINATION
A. Verify field measurements are as indicated on the Drawings.
B. Verify all pipe locations and sizes in field prior to fabrication or installation.
C. Verify all equipment locations in field prior to installation. Coordinate final locations with all trades.
3.04 INTERFACE WITH OTHER PRODUCTS
A. Install all pipe, equipment, and accessories to preserve fire resistance rating of partitions and other elements, using materials and methods specified.
3.05 FIELD QUALITY CONTROL
A. Provide tests as necessary to establish the adequacy, quality, safety, completed status, and reliable operation of each system. Tests shall be conducted under the supervision of the Architect.
B. Install all equipment, devices, pipe, and materials securely and in a neat and workmanlike manner in accordance with all applicable standards and codes.
C. Install all equipment, pipe, and materials plumb and level and align and adjust for satisfactory operation.
D. Install all equipment, pipe, and materials in accordance with the manufacturer's instructions and recommendations.
E. Inspect all equipment, pipe, and materials for defects.
3.06 ERECTION
A. Rigging:
1. The Plumbing Contractor shall arrange for all labor and equipment required for the proper installation of the plumbing equipment in the locations indicated on the Drawings. Where crane rental or other erection is required, such costs shall be included in the Plumbing Contract, unless specific arrangements are made with the General Contractor to cover these costs.
B. Supplemental Framing:
1. Provide the design, fabrication, and erection of supplementary structural framing required for attachment of hangers or other devices supporting plumbing equipment. Provide framing members of standard rolled steel shapes, A-36 steel. Provide members welded to structural members equal to the specification for the main structural member. Provide "simple beam" type framing with end connections welded or bolted for shear loads. Use cantilevers when detailed or specifically approved by the Architect/Engineer. The Architect/Engineer approval is required for the location of supplementary framing. Use only certified welders. Design framing members for their actual loads, with allowable stresses specified by AISC, without excessive deflection and with consideration for rigidity under vibration, in accordance with standard structural practices. Show on shop drawing supplementary framing, including design loads, member size and location.
3.07 CUTTING, PATCHING, AND PIERCING
A. Cutting of openings and installation of sleeves or frames through walls and surfaces shall be done in a neat workmanlike manner. Openings shall be cut only as large as required for the installation; sleeves and/or frames installed and filled with finished surfaces and grouted in place. Surfaces around openings shall be left smooth and finished to match surrounding surface.
B. Obtain written permission of the Architect/Engineer before cutting or piercing structural members. Use craftsmen skilled in their respective trades for cutting, fitting, repairing, patching of plaster, and finishing of materials including carpentry work, metal work or concrete work required for this work.
C. Do not weaken walls, partitions, or floors with cutting. Holes required to be cut in floors must be drilled without breaking out around the holes. The Architect/Engineer will determine suitability of patching and/or refinishing requirements.
D. The Plumbing Contractor is responsible for patching of all openings resulting from the installation or removal of plumbing equipment or materials.
E. Provide and maintain temporary partitions or dust barriers adequate to prevent the spread of dust and dirt to adjacent areas.
F. Patch existing finished surfaces and building components using new materials matching existing materials and experienced Subcontractors.
G. Fire and Smoke Partition Penetrations: The Contractor shall familiarize himself with all fire rated construction and install his work so as to maintain the integrity of the fire code rating. Maintain rating of fire rated and smoke rated construction. Seal annular space around conduits. For fire and smoke rated floors, walls and partitions, use UL listed material that maintains fire rated wall and floor integrity.
3.08 CLEANING AND REPAIR
A. Clean plumbing parts to remove harmful materials.
B. Clean exposed surfaces of all pipe, equipment, and accessories of all dirt, debris, splatter, and other deleterious materials. Follow the manufacturer's recommendations for cleaning as applicable.
C. Repair or replace damaged pipe, equipment, and accessories, as directed by and to the satisfaction of the Architect, where marring or disfigurement has occurred. All pipe, equipment, and accessories shall be new.
3.09 TESTING AND INSPECTION
A. Upon completion, the entire system shall be tested under operating conditions.
1. All equipment shall be tested under service conditions and proven to operate properly and noiselessly.
2. All additional tests as required throughout this Specification shall be completed with results reported back to the Architect/Engineer for review.
B. Operate all equipment, after installation and connection. Inspect for improper connections and operation and correct deficiencies as required.
C. Inspection:
1. Upon completion of the work, the Contractor shall obtain certificates of inspection and approval from all City and State Authorities Having Jurisdiction.
3.10 PROJECT CLOSEOUT
A. Project Record Documents: At project closeout, provide one printed copy and one electronic copy of project record drawings to the Owner. Information contained on project record drawings shall include, as a minimum,:
1. Actual locations of all pipe, equipment, accessories, etc.
2. Actual pipe sizes and elevations.
3. Actual routing of all underfloor or below grade piping.
B. Operation and Maintenance Data: At project closeout, submit to the Architect two copies of descriptive literature, maintenance and operation data for all piping, equipment, accessories, and materials used. Include maintenance procedures, intervals, and parts list of each item installed under this contract. Include all manufacturer's guarantees and warranties.

END OF SECTION

SECTION 220501 - TRENCHING AND BACKFILL FOR PLUMBING SYSTEMS

PART 1 GENERAL
1.01 SECTION INCLUDES
A. Backfilling and compacting for utilities inside and outside the building.
1.02 PROJECT CONDITIONS
A. Provide sufficient quantities of fill to meet project schedule and requirements. When necessary, store materials on site in advance of need.
B. When fill materials need to be stored on site, locate stockpiles where designated.
1. Separate differing materials with dividers or stockpile separately to prevent intermixing.
2. Prevent contamination.
3. Protect stockpiles from erosion and deterioration of materials.
C. Verify that survey bench marks and intended elevations for the Work are as indicated.
D. Protect plants, lawns, rock outcroppings, existing construction, and other features to remain.
E. Protect bench marks, survey control points, existing structures, fences, sidewalks, paving, and curbs from excavating equipment and vehicular traffic.
F. Code requirements shall supersede any conflicting requirements of this section.

PART 2 PRODUCTS
2.01 FILL MATERIALS
A. General Fill: Subsoil excavated on-site.
1. Graded.
2. Free of lumps larger than 3 inches, rocks larger than 2 inches, and debris.
B. Structural Fill: Subsoil excavated on-site.
1. Graded.
2. Free of lumps larger than 3 inches, rocks larger than 2 inches, and debris.
C. Granular Fill - Gravel: Pit run stone; free of shale, clay, friable material and debris.
D. Granular Fill - Pea Gravel: Natural stone; free of clay, shale, organic matter.
E. Sand: Natural river or bank sand; free of silt, clay, loam, friable or soluble materials, and organic matter.
F. Topsoil: Topsoil excavated on-site.
1. Select.
2. Free of roots, rocks larger than 1/2 inch, subsoil, debris, large weeds and foreign matter.
3. Acidity range (pH) of 5.5 to 7.5.
4. Containing a minimum of 4 percent and a maximum of 25 percent inorganic matter.

PART 3 EXECUTION
3.01 EXAMINATION
A. Identify required lines, levels, contours, and datum locations.
B. Locate, identify, and protect utilities and construction that remains and protect from damage.
3.02 TRENCHING
A. Notify Engineer of unexpected subsurface conditions and discontinue affected work in area until notified to resume work.
B. Slope banks of excavations deeper than 4 feet to angle of repose or less until shored.
C. Do not interfere with 45 degree bearing splay of foundations.
D. Cut trenches wide enough to allow inspection of installed utilities.
E. Hand trim excavations. Remove loose matter.
F. Remove large stones and other hard matter which could damage piping or impede consistent backfilling or compaction.
G. Remove lumped subsoil, boulders, and rock up to 1/3 cu yd measured by volume.
H. Remove excavated material that is unsuitable for re-use from site.
I. Stockpile excavated material to be re-used in area designated on site.
J. Remove excess excavated material from site.
3.03 PREPARATION FOR UTILITY PLACEMENT
A. Cut out soft areas of subgrade not capable of compaction in place. Backfill with general fill.
B. Compact subgrade to density equal to or greater than requirements for subsequent fill material.
C. Until ready to backfill, maintain excavations and prevent loose soil from falling into excavation.
3.04 BACKFILLING
A. Backfill to contours and elevations indicated using unfrozen materials.
B. Fill subgrade to finish grade or slab elevation unless otherwise indicated.
C. Employ a placement method that does not disturb or damage other work.
D. Systematically fill to allow maximum time for natural settlement. Do not fill over porous, wet, frozen, or spongy subgrade surface.
E. Maintain optimum moisture content of fill materials to attain required compaction density.
F. Granular Fill: Place and compact materials in equal continuous layers not exceeding 8 inches compacted depth.
G. Soil Fill: Place and compact material in equal continuous layers not exceeding 8 inches compacted depth.
H. Slope grade away from building minimum 2 inches in 10 ft, unless noted otherwise. Make gradual grade changes. Blend slope into level areas.
I. Correct areas that are over-excavated.
J. Trust bearing surfaces: Fill with concrete.
K. Other areas: Use general fill, flush to required elevation, compacted to minimum 95 percent of maximum dry density.
L. Compaction Density Unless Otherwise Specified or Indicated:
1. Under paving, slabs-on-grade, and similar construction: 97 percent of maximum dry density.
2. At other locations: 95 percent of maximum dry density.
M. Reshape and re-compact fills subjected to vehicular traffic.
3.05 BEDDING AND FILL AT SPECIFIC LOCATIONS
A. Use general fill unless otherwise specified or indicated.
B. Utility Piping, Conduits, and Duct Bank:
1. Bedding: Use granular fill.
2. Cover with general fill.
3. Fill up to finish grade elevation.
4. Compact in maximum 8 inch lifts to 95 percent of maximum dry density.
C. Over Subbuildings Piping at Foundation Perimeter and Under Slabs:
1. Drainage fill and geotextile fabric.
2. Cover drainage fill with general fill.
3. Fill up to finish grade elevation.
4. Compact to 95 percent of maximum dry density.
3.06 TOLERANCES
A. Top Surface of General Backfilling: Plus or minus 1 inch from required elevations.
B. Top Surface of Backfilling Under Paved Areas: Plus or minus 1 inch from required elevations.
3.07 FIELD QUALITY CONTROL
A. Perform compaction density testing on compacted fill in accordance with ASTM D1556, ASTM D2167, ASTM D2922, or ASTM D3017.
B. Evaluate results in relation to compaction curve determined by testing uncompacted material in accordance with ASTM D 698 ("standard Proctor"), ASTM D 1557 ("modified Proctor"), or AASHTO T 180.
C. If tests indicate work does not meet specified requirements, remove work, replace and retest.
D. Frequency of Tests: Every two feet.
3.08 CLEAN-UP
A. Leave unused materials in a neat, compact stockpile.
B. Remove unused stockpiled materials, leave area in a clean and neat condition. Grade stockpile area to prevent standing surface water.
C. Leave borrow areas in a clean and neat condition. Grade to prevent standing surface water.

END OF SECTION

SECTION 220516 - EXPANSION FITTINGS AND LOOPS FOR PLUMBING PIPING

PART 1 GENERAL
1.01 SECTION INCLUDES
A. Flexible pipe connectors
B. Pipe loops, offsets, and swing joints.

PART 2 PRODUCTS
2.01 FLEXIBLE PIPE CONNECTORS - STEEL PIPING
A. Manufacturer:
1. Mercer Rubber Company.
2. Metraflex Company.
B. Inner Hose: Carbon Steel.
C. Exterior Sleeve: Single braided, stainless steel.
D. Pressure Rating: 125 psi and 450 degrees F.
E. Joint: As specified for pipe joints.
F. Size: Use pipe sized units.
G. Maximum offset: 1 inch on each side of installed center line
H. Application: Steel piping.
2.02 FLEXIBLE PIPE CONNECTORS - COPPER PIPING
A. Manufacturer:
1. Mercer Rubber Company.
2. Metraflex Company.
B. Inner Hose: Bronze.
C. Exterior Sleeve: Braided bronze.
D. Pressure Rating: 125 psi and 450 degrees F.
E. Joint: As specified for pipe joints.
F. Size: Use pipe sized units.
G. Maximum offset: 3/4 inch on each side of installed center line.
H. Application: Copper piping.

PART 3 EXECUTION
3.01 INSTALLATION
A. Install in accordance with manufacturer's instructions.
B. Install in accordance with EJMA (Expansion Joint Manufacturers Association) Standards.
C. Install flexible pipe connectors on pipes connected to vibration isolated equipment. Provide line size flexible connectors.
D. Install flexible connectors at right angles to displacement. Install one end immediately adjacent to isolated equipment and anchor other end. Install in horizontal plane unless indicated otherwise.
E. Anchor pipe to building structure where indicated and as required to control detrimental movement of piping. Provide pipe guides so movement is directed along axis of pipe only. Erect piping such that strain and weight is not on connections or apparatus.
F. Provide support and equipment required to control expansion and contraction of piping. Provide loops, pipe offsets, and swing joints, or approved expansion joints where required.
G. Contractor may substitute grooved piping for vibration isolated equipment instead of flexible connectors. Grooved piping need not be anchored.

END OF SECTION

SECTION 220519 - METERS AND GAUGES FOR PLUMBING PIPING

PART 1 GENERAL
1.01 SECTION INCLUDES
A. Pressure gauges
B. Test plugs
C. Thermometers and thermometer wells

PART 2 PRODUCTS
2.01 Manufacturers:
A. Dwyer Instruments, Inc,
B. FMC Technologies,
C. Venture Measurement Company,
D. McGrometer,
E. Moeller Instrument Co., Inc,
F. Omega Engineering, Inc.
2.02 PRESSURE GAUGES
A. Pressure Gauges: ASME B40.100, UL 393 drawn steel case, phosphor bronze bourdon tube, rotary brass movement, brass socket, with front recalibration adjustment, black scale on white background.
1. Case: Steel with brass bourdon tube.
2. Size: 2 inch diameter.
3. Lens: Clear glass.
4. Mid-Scale Accuracy: Two percent.
5. Scale: Psi and KPa.
2.03 STEM TYPE THERMOMETERS
A. Thermometers - Adjustable Angle: Red- or blue-appearing non-toxic liquid in glass; ASTM E 1; lens front tube, cast aluminum case with enamel finish, cast aluminum adjustable joint with positive locking device; adjustable 360 degrees in horizontal plane, 180 degrees in vertical plane.
1. Size: 7 inch scale.
2. Window: Clear Lexan.
3. Stem: 3/4 inch NPT brass.
4. Accuracy: 2 percent.
5. Calibration: Degrees F and Degrees C.
2.04 TEST PLUGS
A. Test Plug: 1/4 inch or 1/2 inch brass fitting and cap for receiving 1/8 inch outside diameter pressure or temperature probe with Nordel core for temperatures up to 350 degrees F.
B. Test Plug: 1/4 inch or 1/2 inch brass fitting and cap for receiving 1/8 inch outside diameter pressure or temperature probe with Viton core for temperatures up to 400 degrees F.

PART 3 EXECUTION
3.01 INSTALLATION
A. Install in accordance with manufacturer's instructions.
B. Provide one pressure gauge per pump, installing taps before strainers and on suction and discharge of pump. Pipe to gauge.
C. Install thermometers in piping systems in sockets in short couplings. Enlarge pipes smaller than 2-1/2 inch for installation of thermometer sockets. Ensure sockets allow clearance from insulation.
D. Provide instruments with scale ranges selected according to service with largest appropriate scale.
E. Install gauges and thermometers in locations where they are easily read from normal operating level. Install vertical to 45 degrees off vertical.
F. Adjust gauges and thermometers to final angle, clean windows and lenses, and calibrate to zero.
G. Locate test plugs where indicated or required for measurement and balancing of systems.

END OF SECTION

SECTION 220529 - HANGERS AND SUPPORTS FOR PLUMBING PIPING AND EQUIPMENT

PART 1 GENERAL
1.01 SECTION INCLUDES
A. Support and attachment components for equipment, piping, and other plumbing work.
B. Roof top piping supports.

PART 2 PRODUCTS
2.01 MANUFACTURERS
A. Miro Industries Inc.
B. Cooper B-Line
C. Erico International Corporation
D. Unistrut
E. Aeroflex
F. Buckaroos
2.02 SUPPORT AND ATTACHMENT COMPONENETS
A. General Requirements:
1. Comply with MSS SP-58.
2. Provide all required hangers, supports, anchors, fasteners, fittings, accessories, and hardware as necessary for the complete installation of plumbing work.
3. Provide products listed, classified, and labeled as suitable for the purpose intended, where applicable.
4. Where support and attachment component types and sizes are not indicated, select in accordance with manufacturer's application criteria as required for the load to be supported. Include consideration for vibration, equipment operation, and shock loads where applicable.
5. Do not use wire, chain, perforated pipe strap, or wood for permanent supports unless specifically indicated or permitted.
6. Steel Components: Use corrosion resistant materials suitable for the environment where installed.
a. Indoor Dry Locations: Use zinc-plated steel or approved equivalent unless otherwise indicated.
b. Outdoor and Damp or Wet Indoor Locations: Use galvanized steel, stainless steel, or approved equivalent unless otherwise indicated.
c. Zinc-plated Steel: Electroplated in accordance with ASTM B633.
d. Galvanized Steel: Hot-dip galvanized after fabrication in accordance with ASTM A123/A123M or ASTM A153/A153M.
2.03 NON-PENETRATING ROOFTOP SUPPORTS:
A. Provide steel pedestals with thermoplastic or rubber base that rest on top of roofing membrane, not requiring any attachment to the roof structure and not penetrating the roof assembly, which support fixtures as specified.
B. Base Stress: As required to distribute load sufficiently to prevent indentation of roofing assembly.
C. Attachment/Support Fixtures: As recommended by manufacturer, same type as indicated for equivalent indoor hangers and supports.
D. Supports and Hangers - General: Provide with bases that rest on the roof membrane and that have:
1. Gently rounded edges to prevent damage to roof membrane.
2. 1 inch high raised edges.
3. Drainage ports to prevent ponding.
4. Carbon black additive to polycarbonate, when used, for UV stabilization.
5. Provide loose fit aluminum pipe strap on all supports, specifically designed for the support models below. Straps shall be loose fitting to prevent pipe from being displaced from the support stand but without restricting movement for expansion and contraction.
E. Fixed Height Pipe Stands: Polycarbonate resin bases.
1. 1-Inch Nominal Pipe: "U"-shaped cradle; 1-1/2 inch ID maximum pipe capacity, 1-9/10 inch OD maximum pipe capacity; 1-1/2 inch additional height per spacer, maximum 3 spacers; total load up to 80 lb; 6 by 6 inch base (Model 1.5).
2. 3-Inch Nominal Pipe: Self-lubricating polycarbonate roller supported by glass filled nylon roller rod in "U"-shaped cradle; 3 inch ID maximum pipe capacity, 3-7/8 inch OD maximum pipe capacity; 2 inch additional pipe clearance per spacer, maximum 3 spacers; total load up to 100 lb; 7-1/2 by 7-1/2 inch base (Model 3-R-2 or 3-R-4).
3. 4-Inch Nominal Pipe: Self-lubricating polycarbonate roller supported by glass filled nylon rod; 4 inch maximum pipe capacity, 5 inch OD maximum pipe capacity; total load up to 125 lb; 7-1/2 by 7-1/2 inch base (Model 4-R).
4. 5-Inch Nominal Pipe: Self-lubricating polycarbonate roller supported by glass filled nylon rod; 5 inch maximum pipe capacity, 6 inch OD maximum pipe capacity; total load up to 150 lb; 9 by 15-1/2 inch base (Model 5-R).
F. Strut-Type Supports: Single base with two threaded rods supporting hot dipped galvanized horizontal channel strut.
1. Size: 12 inch strut 1-5/8 by 13/16 inch, pipe clearance variable up to 7 inch (Model 12 Base Strut).
2. Size: 16 inch strut 1-5/8 by 13/16 inch, pipe clearance variable up to 7 inch (Model 16 Base Strut).
3. Base: Polycarbonate resin; total load up to 125 lb; 7-1/2 by 10 inch or 9 by 15-1/8 inch base.
G. ACCESSORIES
1. Support Pads: 15-3/4 by 19-3/4 inch square, 1/8 inch thick, flexible PVC with carbon black additive for UV stabilization.
2. Deck Plates: Square metal deck plate with curved up edges, to spread load and protect roof membrane.
a. Thickness: 18 gauge.
b. Material: Hot dip galvanized.
c. Size: 12 x 12 inch square; total load up to 200 lb (Model DP-12).
d. Size: 18 x 18 inch square; total load up to 400 lb (Model DP-18).
e. Size: 24 x 24 inch square; total load up to 800 lb (Model DP-24).
3. Rollers:
a. Roller 3: 3 inch sturdy polycarbonate roller, shaft 5/8 inches, end diameter 1-7/8 inches. Roller surface has a 3 inch radius arch. Maximum load capacity may not exceed 150 lbs.
b. Roller 5: 5 inch sturdy polycarbonate roller, shaft 5/8 inches, end diameter 2-7/16 inches. Roller surface has a 5 inch radius arch. Maximum load capacity may not exceed 150 lbs.

PART 3 EXECUTION
3.01 INSTALLATION
A. Install products in accordance with manufacturer's instructions.
B. Install anchors and fasteners in accordance with ICC Evaluation Services, LLC evaluation report conditions of use where applicable.
C. Provide independent support from building structure. Do not provide support from piping, ductwork conduit, or other systems.
D. Unless specifically indicated or approved by Engineer, do not provide support from

ktgy
17911 Von Karman Ave.
Suite 200
Irvine, CA 92614
ktgy.com
949.851.2133

ktgy Project Number
Contact DORINA WATSON
Email dwatson@ktgy.com
Senior Director DAVID SCHMITZ
Designer RUSSEL ROSALES

Developer
SEDC
23906 SOBOBA ROAD
SAN JACINTO, CA 92581
PHONE: (951) 663-2058

SOBOBA SOVOATUM VILLAGE
PHASE-2
SAN JACINTO, CA

No.	DATE	DESCRIPTION

Client is responsible for notifying architect in writing for any discovered errors or omissions in the plans and specifications during construction of the project. Failure for Client to notify Architect of any known errors or omissions in the plans or specifications, and proceeding with constructing the portion of work shown in the plans or specifications containing known errors or omissions shall be a waiver by Client for any liability of Architect for such known errors or omissions. Client releases Architect for any liability for such portions of work, and Architect shall not be liable for any delay damages, change orders, repair costs, removal or demolition costs, or replacement of any such portions of work.

Sheet Name
PLUMBING SPECIFICATIONS

2026-05-26, ISSUED FOR BID

Schnackel engineers
800-281-0963 www.schnackel.com

P4-13

SE JOB#: 250720
COPYRIGHT 2024 KTGY GROUP INC. These plans and specifications are protected by United States copyright law and may not be used, reproduced, distributed, transmitted, displayed, or modified in any way without the prior written consent of KTGY Group, Inc. or the authorized copyright holder or licensee.

suspended ceiling support system or ceiling grid.
E. Unless specifically indicated or approved by Engineer, do not provide support from roof deck.
F. Do not penetrate or otherwise notch or cut structural members without approval of Structural Engineer.
G. Provide thermal insulated pipe supports complete with hangers and accessories. Install thermal insulated pipe supports during the installation of the piping system.
H. Secure fasteners according to manufacturer's recommended torque settings.
I. Determine that roof structure, roof insulation, and roof membrane are structurally adequate to support weight of pipe, duct, conduit, and supports and hangers.
J. Install supports and hangers in accordance with manufacturer's recommendations.
K. Install supports at maximum spacing of 10 feet unless closer spacing is required due to weight of pipe or conduit contents or greater spacing is specifically allowed by manufacturer; space and adjust to support an equal amount of weight; do not exceed manufacturer's recommended load limits.
L. Remove roofing aggregate from area 2 inches larger than support base; comply with roofing manufacturer's requirements to maintain roofing warranty.
M. Install an additional sheet of roofing material, support pad, or deck plate beneath each support base.
N. Support Pads:
1. Remove rock, aggregate, dirt and excess dust from area to be covered by pad.
2. Apply support pad on cleaned area.
3. Center bases on top of support pads.
O. Deck Plates:
1. Required for loads greater than 100 pounds per support.
2. Locate centered under bases of pipe supports and hangers.
3. Remove rock, aggregate, dirt and excess dust from an area 2 inches larger than deck plate.
4. Install with curved edges up.
P. Pipe Supports: Center beneath pipe so that pipe is located squarely over and through cradle or hanger. Set pipe in support without dropping or causing undue impact.
Q. All roofing penetrations shall be flashed and weather sealed by the roofing manufacturer's authorized roofing contractor at this Contractor's expense. This Contractor shall contract with the factory authorized roofing contractor for the specific roofing system applicable to this project. The use of an unauthorized roofing contractor may result in removal and replacement of the penetration systems at this Contractor's expense.
3.02 FIELD QUALITY CONTROL
A. Inspect support and attachment components for damage and defects.
B. Repair cuts and abrasions in galvanized finishes using zinc-rich paint recommended by manufacturer. Replace components that exhibit signs or corrosion.
C. Correct deficiencies and replace damaged or defective support and attachment components.

END OF SECTION

SECTION 220548 - VIBRATION AND SEISMIC CONTROLS FOR PLUMBING PIPING AND EQUIPMENT

PART 1 GENERAL
1.01 SECTION INCLUDES
A. Concrete housekeeping pads
B. Vibration isolators
C. Seismic restraints.

PART 2 PRODUCTS
2.01 MANUFACTURERS
A. Eaton Corporation
B. Kinetics Noise Control, Inc.
C. Mason Industries.
D. Unistrut
E. Vibration Eliminator Company, Inc.
F. Source Limitations: Furnish seismic restraint system components and accessories produced by a single manufacturer and obtained from a single supplier.
2.02 VIBRATION ISOLATORS FOR NON-SEISMIC APPLICATIONS:
A. Resilient Material Isolator Pads:
1. Description: Single or multiple layer pads utilizing elastomeric (e.g. neoprene, rubber) or fiberglass isolator material.
2. Pad Thickness: As required for specified minimum static deflection; minimum 0.25 inch thickness.
3. Multiple Layer Pads: Provide bonded, galvanized sheet metal separation plate between each layer.
B. Resilient Material Isolator Mounts, Non-Seismic:
1. Description: Mounting assemblies for bolting equipment to supporting structure utilizing elastomeric (e.g. neoprene, rubber) or fiberglass isolator material; fail-safe type.
C. Open (Unhoused) Spring Isolators:
1. Description: Isolator assembly consisting of single or multiple free-standing, laterally stable steel spring(s) without a housing.
2. Bottom Load Plate: Non-skid molded elastomeric isolator material or steel with non-skid elastomeric isolator pad with provisions for bolting to supporting structure as required.
3. Furnished with integral leveling device for positioning and securing supported equipment.
D. Spring Isolator Hangers, Non-Seismic:
1. Description: Isolator assembly designed for installation in hanger rod suspension system utilizing single or multiple free-standing, laterally stable steel spring(s) in series with an elastomeric element for the lower hanger rod connection.
2. Designed to accommodate misalignment of bottom hanger rod up to 30 degrees (plus/minus 15 degrees) without short circuiting of isolation.
E.
2.03 SEISMIC RESTRAINT SYSTEMS
A. Description: System components and accessories specifically designed for field assembly and attachment of seismic restraints.
B. Cable Restraints:
1. Comply with ASCE 19.
2. Cables: Pre-stretched, galvanized steel wire rope with certified break strength.
3. Cable Connections: Use only swaged end fittings. Cable clips and wedge type end fittings are not permitted in accordance with ASCE 19.
4. Use protective thimbles for cable loops where potential for cable damage exists.
C. Rigid Restraints: Use MFMA-4 steel channel (strut), steel angle, or steel pipe for structural element; suitable for both compressive and tensile design loads.
2.04 BASES
A. Concrete Housekeeping Pad:
1. Construction: Concrete as specified for flooring.
2. Design: 4" high above the surrounding finished flooring and 4" greater in dimension that the equipment supported, or greater if detailed on the Drawings or when indicated.

PART 3 EXECUTION
3.01 INSTALLATION
A. Install products in accordance with manufacturer's instructions.
B. Install anchors and fasteners in accordance with ICC Evaluation Services, LLC (ICC-ES) evaluation report conditions of use where applicable.
C. Secure fasteners according to manufacturer's recommended torque settings.
D. Install flexible piping connections to provide sufficient slack for vibration isolation and/or seismic relative displacements as indicated or as required.
E. Vibration Isolation Systems:
1. Spring Isolators:
a. Position equipment at operating height; provide temporary blocking as required.
b. Lift equipment free of isolators prior to lateral repositioning to avoid damage to isolators.
c. Level equipment by adjusting isolators gradually in sequence to raise equipment uniformly such that excessive weight or stress is not placed on any single isolator.
2. Isolator Hangers:
a. Use precompressed isolator hangers where required to facilitate installation and prevent damage to equipment utility connection provisions.
b. Locate isolator hangers at top of hanger rods in accordance with manufacturer's instructions.
3. Clean debris from beneath vibration-isolated equipment that could cause short circuiting of isolation.
4. Use elastomeric grommets for attachments where required to prevent short circuiting of isolation.
5. Adjust isolators to be free of isolation short circuits during normal operation.
6. Do not overtighten fasteners such that resilient material isolator pads are compressed beyond manufacturer's maximum recommended deflection.
F. Seismic Controls:
1. Provide specified snubbing element air gap; remove any factory-installed spacers, debris, or other obstructions.
2. Seismic Restraint Systems:
a. Do not attach seismic restraints and gravity supports to dissimilar parts of structure that may move differently during an earthquake.
b. Install restraints within permissible angles in accordance with seismic design.
c. Install cable restraints straight between component/run and structural attachment; do not bend around other nonstructural components or structural elements.
d. Install cable restraints for vibration-isolated components slightly slack to prevent short circuiting of isolation.
e. Install hanger rod stiffeners where indicated using only specified clamps; do not weld stiffeners to hanger rod.

END OF SECTION

SECTION 220595 - FIRE STOPPING FOR PLUMBING SYSTEMS

PART 1 GENERAL
1.01 SECTION INCLUDES
A. Firestopping materials
1. Firestopping of all penetrations and interruptions to fire rated assemblies, whether indicated on Drawings or not, and other openings indicated.

PART 2 PRODUCTS
2.01 FIRESTOPPING ASSEMBLIES
A. Firestopping: Any material meeting requirements.
1. Fire Ratings: Use any system listed by UL or FM or tested in accordance with ASTM E 814 or ASTM E 119 that has F Rating equal to fire rating of penetrated assembly and minimum T Rating Equal to F Rating and that meets all other specified requirements.
2.02 MATERIALS
A. Manufacturers:
1. A/D Fire Protection Systems Inc.
2. 3M Fire Protection Products.
3. Specified Technologies, Inc.
B. Elastomeric Silicone Firestopping: Single or multiple component silicone elastomeric compound and compatible silicone sealant, conforming to the following:
1. Durability and Longevity: Permanent.
2. Color: Manufacturer's standard color.
C. Foam Firestoppping: Single or multiple component foam compound, conforming to the following:
1. Durability and Longevity: Permanent.
2. Color: Manufacturer's standard color.
D. Fibered Compound Firestopping: Formulated compound mixed with incombustible non-asbestos fibers, conforming to the following:
1. Durability and Longevity: Permanent.
2. Color: Manufacturer's standard color.
E. Fiber Packing Material: Mineral or ceramic fiber packing insulation; conforming to the following:
1. Durability and Longevity: Permanent.
F. Firestop Devices: Mechanical device with incombustible or silicone elastomer filler and sheet stainless steel jacket, collar, and flanged stops, conforming to the following:
1. Durability and Longevity: Permanent; suitable for pedestrian traffic or vehicular traffic where necessary.
G. Intumescent Putty: Compound which expands on exposure to surface heat gain; conforming to the following:
1. Potential Expansion: Minimum 500 percent free expansion.
2. Durability and Longevity: Permanent.
3. Color: Manufacturer's standard color.
H. Firestop Pillows: Formed mineral fiber pillows; conforming to the following:
1. Durability and Longevity: Permanent.
I. Primers, Sleeves, Forms, and Accessories: Type required for tested assembly design.

PART 3 EXECUTION
3.01 EXAMINATION
A. Verify openings are ready to receive the work of this section.
3.02 PREPARATION
A. Clean substrate surfaces of dirt, dust, grease, oil, loose material, or other matter which may affect bond of firestopping material.
B. Remove incompatible materials which may affect bond.
C. Install backing materials to arrest liquid material leakage.
3.03 INSTALLATION
A. Install materials in manner described in fire test report and in accordance with manufacturer's instructions, completely closing openings.
B. Do not cover installed firestopping until inspected by authority having jurisdiction.
C. Install labeling required by code.
3.04 CLEANING AND PROTECTION
A. Clean adjacent surfaces of firestopping materials.
B. Protect adjacent surfaces from damage by material installation.

END OF SECTION

SECTION 220719 - PLUMBING PIPING INSULATION

PART 1 GENERAL
1.01 SECTION INCLUDES
A. Plumbing piping insulation
1. Domestic hot and tempered water piping
2. Domestic cold water piping
3. Roof drain piping insulation
4. Heat traced piping
5. Exterior metal jacketed piping
6. Buried insulated piping.

PART 2 PRODUCTS
2.01 REQUIREMENTS FOR ALL PRODUCTS OF THIS SECTION
A. Surface Burning Characteristics: Flame spread/Smoke developed index of 25/50, maximum, when tested in accordance with ASTM E 84, NFPA 255, or UL 723.
B. The Contractor may use any of the following insulating/jacketing materials, at his option, provided the selected material meets with the approval of all State, local authorities and utility company requirements. Verification of compliance of the selected insulating/jacketing material is the sole responsibility of the installing Contractor.
2.02 GLASS FIBER
A. Manufacturers:
1. CertainTeed Corporation
2. Johns Manville Corporation
3. Knauf Insulation
4. Owens Corning Corp.
B. Insulation: ASTM C 547 and ASTM C 795; rigid molded, noncombustible; 'K' value: ASTM C 177, 0.24 at 75 degrees F; Maximum service temperature: 850 degrees F; Maximum moisture absorption: 0.2 percent by volume.
C. Insulation: ASTM C 547 and ASTM C 795; semi-rigid, noncombustible, end grain adhered to jacket; 'K' value: ASTM C 177, 0.24 at 75 degrees F; Maximum service temperature: 650 degrees F; Maximum moisture absorption: 0.2 percent by volume.
D. Vapor Barrier Jacket: White kraft paper with glass fiber yarn, bonded to aluminized film; moisture vapor transmission when tested in accordance with ASTM E 96/E 96M of 0.02 perm-inches.
E. Vapor Barrier Lap Adhesive: Compatible with insulation.
F. Insulating Cement/Mastic: ASTM C 195; hydraulic setting on mineral wool.
G. Fibrous Glass Fabric: Cloth: Untreated; 9 oz/sq yd weight; Blanket: 1.0 lb/cu ft density; Weave: 5x5.
H. Indoor Vapor Barrier Finish: Vinyl emulsion type acrylic, compatible with insulation, white color; Outdoor Vapor Barrier Mastic: Vinyl emulsion type acrylic or mastic, compatible with insulation, black color; Outdoor Breather Mastic: Vinyl emulsion type acrylic or mastic, compatible with insulation, black color.
I. Insulating Cement: ASTM C 449.
2.03 FLEXIBLE ELASTOMERIC CELLULAR INSULATION
A. Manufacturer: Aeroflex USA, Inc.; Armacell LLC; K-Flex USA LLC.
B. Insulation: Preformed flexible elastomeric cellular rubber insulation complying with ASTM C 534 Grade 1; use molded tubular material wherever possible; Minimum Service Temperature: -40 degrees F; Maximum Service Temperature: 220 degrees F; Connection: Waterproof vapor barrier adhesive.
C. Elastomeric Foam Adhesive: Air dried, contact adhesive, compatible with insulation.
2.04 JACKETS
A. PVC Plastic.
1. Manufacturers: Knauf Fiber Glass; Johns Manville Corporation; Owens Corning Corp; CertainTeed Corporation.
2. Jacket: One piece molded type fitting covers and sheet material, off-white color; Minimum Service Temperature: 0 degrees F; Maximum Service Temperature: 150 degrees F; Moisture Vapor Permeability: 0.002 perm inch, maximum, when tested in accordance with ASTM E 96/E 96M; Thickness: 10 mil; Connections: Brush on welding adhesive; Covering Adhesive Mastic: Compatible with insulation.
B. ABS Plastic:
1. Jacket: One piece molded type fitting covers and sheet material, off-white color; Minimum Service Temperature: -40 degrees F; Maximum Service Temperature of 180 degrees F; Moisture Vapor Permeability: 0.012 perm inch, when tested in accordance with ASTM E 96/E 96M; Thickness: 30 mil.; Connections: Brush on welding adhesive.
C. Aluminum Jacket: ASTM B 209 (ASTM B 209M) formed aluminum sheet; Thickness: 0.016 inch sheet; Finish: Embossed; Joining: Longitudinal slip joints and 2 inch laps; Fittings: 0.016 inch thick die shaped fitting covers with factory attached protective liner; Metal Jacket Bands: 3/8 inch wide; 0.015 inch thick aluminum; Metal Jacket Bands: 3/8 inch wide; 0.010 inch thick stainless steel.
D. Stainless Steel Jacket: ASTM A 666, Type 304 stainless steel; Thickness: 0.010 inch; Finish: Smooth; Metal Jacket Bands: 3/8 inch wide; 0.010 inch thick stainless steel.

PART 3 EXECUTION
3.01 EXAMINATION
A. Verify that piping has been tested before applying insulation materials.
B. Verify that surfaces are clean and dry, with foreign material removed.
C. Verify that the installation of all heat trace systems have been completed and tested before applying insulation materials.
3.02 INSTALLATION
A. Install in accordance with manufacturer's instructions.
B. Install in accordance with NAIMA National Insulation Standards.
C. Exposed Piping: Locate insulation and cover seams in least visible locations.
D. Insulated pipes conveying fluids below ambient temperature: Insulate entire system including fittings, valves, unions, flanges, strainers, flexible connections, and expansion joints.
E. Glass fiber insulated pipes conveying fluids below ambient temperature: Provide vapor barrier jackets, factory-applied or field-applied. Secure with self-sealing longitudinal laps and butt strips with pressure sensitive adhesive. Secure with outward clinch expanding staples and vapor barrier mastic; Insulate fittings, joints, and valves with molded insulation of like material and thickness as adjacent pipe. Finish with glass cloth and vapor barrier adhesive or PVC fitting covers.
F. For hot piping conveying fluids 140 degrees F or less, do not insulate flanges and unions at equipment, but bevel and seal ends of insulation.
G. For hot piping conveying fluids over 140 degrees F, insulate flanges and unions at equipment.
H. Glass fiber insulated pipes conveying fluids above ambient temperature: Provide standard jackets, with or without vapor barrier, factory-applied or field-applied. Secure with self-sealing longitudinal laps and butt strips with pressure sensitive adhesive. Secure with outward clinch expanding staples; Insulate fittings, joints, and valves with insulation of like material and thickness as adjoining pipe. Finish with glass cloth and adhesive or PVC fitting covers.
I. Inserts and Shields: Application: Piping 2 inches diameter or larger; Shields: Galvanized steel between pipe hangers or pipe hanger rolls and inserts; Insert location: Between support shield and piping and under the finish jacket; Insert configuration: Minimum 6 inches long, of same thickness and contour as adjoining insulation; may be factory fabricated; Insert material: Hydrous calcium silicate insulation or other heavy density insulating material suitable for the planned temperature range.
J. Continue insulation through walls, sleeves, pipe hangers, and other pipe penetrations. Finish at supports, protrusions, and interruptions. At fire separations, fire stop penetrations to meet local code requirements.
K. Pipe Exposed in Finished Spaces (less than 10 feet above finished floor): Finish with Aluminum, Stainless Steel, ABS or PVC jacket and fitting covers.
L. Exterior Applications: Provide vapor barrier jacket. Insulate fittings, joints, and valves with insulation of like material and thickness as adjoining pipe, and finish with glass mesh reinforced vapor barrier cement. Cover with aluminum or stainless steel jacket with seams located on bottom side of horizontal piping. Do not use aluminum jackets on projects within 50 miles of a salt water body.
M. Buried Piping: Provide factory fabricated assembly with inner all-purpose service jacket with self-sealing lap, and asphalt impregnated open mesh glass fabric, with one mil thick aluminum foil sandwiched between three layers of bituminous compound; outer surface faced with a polyester film.
N. Heat Traced Piping: Insulate fittings, joints, and valves with insulation of like material, thickness, and finish as adjoining pipe. Size large enough to enclose pipe and heat tracer. Cover with aluminum or stainless steel jacket with seams located on bottom side of horizontal piping. Do not use aluminum jackets on projects within 50 miles of a salt water body.
3.03 SCHEDULES
A. The Contractor may use any of the following insulating materials, at his option, provided the selected material meets with the approval of all State, local authorities and utility company requirements. Verification of compliance of the selected insulating material and thickness with all State and local codes and utility company requirements is the sole responsibility of the installing Contractor.
B. Plumbing Systems:
1. Domestic Hot and Tempered Water Supply and Recirculation:
a. Glass Fiber Insulation: Pipe Size Range: First 8 feet of pipe from fixture, up to 3/4 inch in size: Thickness: 1/2 inch.; All Other Pipe: Thickness: 1 inch.
b. Flexible Elastomeric Cellular Foam Insulation: Pipe Size Range: First 8 feet of pipe from fixture, up to 3/4 inch in size: Thickness: 1/2 inch.; All Other Pipe: Thickness: 1 inch.
2. Domestic Cold Water:
a. Glass Fiber Insulation: Pipe Size Range: All Sizes; Thickness: 1/2 inch.
b. Flexible Elastomeric Cellular Foam Insulation: Pipe Size Range: All Sizes; Thickness: 1/2 inch.
C. Roof Drain Piping:
1. Roof Drainage Above Grade: (Includes Roof Drain Bodies).
a. Glass Fiber Insulation: Pipe Size Range: All Sizes; Thickness: 1 inch.
b. Flexible Elastomeric Cellular Foam Insulation: Pipe Size Range: All Sizes; Thickness: 1 inch.
D. Cooling Systems:
1. Cold Condensate Drains:
a. Glass Fiber Insulation: Pipe Size Range: All Sizes; Thickness: 1/2 inch.
b. Flexible Elastomeric Cellular Foam Insulation: Pipe Size Range: All Sizes; Thickness: 1/2 inch.
E. Other Systems:
1. Piping Exposed to Freezing with Heat Tracing:
a. Glass Fiber Insulation: Pipe Size Range: Up to 2 inch: Thickness: 2 1/2 inch; Pipe Size Range: 2 1/2 inch to 4 inch: Thickness: 3 inch; Pipe Size Range: 5 inch and larger: Thickness: 3 1/2 inch.

END OF SECTION

SECTION 220720 - PIPING SAFETY COVERS

PART 1 GENERAL
1.01 SECTION INCLUDES
A. Piping Safety Covers.

PART 2 PRODUCTS
2.01 MANUFACTURERS
A. Acceptable Manufacturer: Truebro, Inc.
2.02 PIPING INSULATION ACCESSORIES
A. Provide products that comply with the following:
1. Americans with Disabilities Act (ADA), Article 4.19.4.
2. ANSI/ICC A117.1, American National Standard for Accessible Buildings and Facilities.
3. Requirements of applicable building code.
B. Piping Safety Covers: Truebro Lav-Guard.
1. Characteristics: Three-piece molded assembly, minimum 1/8 inch wall thickness, with internal ribs to provide air space between piping and piping insulation jacket, molded to receive manufacturer's snap-clip fasteners.
2. Vinyl Material: Impact-resistant and stain-resistant molded closed-cell anti-microbial vinyl compound, UV-stable, non-fading, non yellowing; having the following performance characteristics:
a. Burning Characteristics: 0 seconds Average Time of Burning (ATB), 0 mm Area of Burning (AEB), when tested in accordance with ASTM D 635.
b. Thermal Conductivity: K-value 1.17, when tested in accordance with ASTM C 177.
c. Indentation Hardness: 60, minimum, when tested in accordance with ASTM D 2240, using Type A durometer.
d. Trap Assembly Cover: Three-piece assembly, with removable clean-out nut enclosure.
e. Angle Stop Covers: Formed with hinged cap for access to valve without requiring cover removal.
f. Configurations: In accordance with manufacturer's product data for project piping configurations indicated on Drawings.
g. Color: China White, gloss finish, paintable.
h. Fasteners: Manufacturer's standard re-usable snap-clip fasteners; wire-tie fasteners not permitted

PART 3 EXECUTION
3.01 EXAMINATION
A. Verify that piping configurations are correct type for piping cover component configurations specified.
3.02 INSTALLATION
A. Install products of this section in accordance with manufacturer's printed installation instructions.
3.03 PROTECTION OF INSTALLED PRODUCTS
A. Do not allow damage to installed products by subsequent construction activities; protect products until Substantial Completion. Replace any damaged products prior to occupancy.

END OF SECTION

SECTION 221005 - PLUMBING PIPING

PART 1 GENERAL
1.01 SECTION INCLUDES
A. Pipe, pipe fittings, valves, and connections for piping systems:
1. Sanitary sewer, interior
2. Domestic water, interior
3. Domestic and fire service water, exterior
4. Storm water, interior
5. Natural gas, interior
6. Condensate drainage piping and equipment drains

PART 2 PRODUCTS
2.01 GENERAL REQUIREMENTS:
A. Potable Water Supply Systems: Provide piping, pipe fittings, and solder and flux (if used), that comply with NSF 61 and NSF 372 for maximum lead content; label pipe and fittings.
2.02 The Contractor may use any of the following piping materials, at his option, provided the selected material meets with the approval of all State and local authorities and utility company requirements. Verification of compliance of the selected piping material with local requirements is the sole responsibility of the installing Contractor. Verify the use of plastic piping systems with the local jurisdiction. Non-metallic piping systems may not be used in any return air plenum ceiling spaces. No exceptions.
2.03 SANITARY SEWER PIPING, BURIED WITHIN 5 FEET OF BUILDING
A. Cast Iron Pipe: ASTM A74 service weight.
1. Fittings: Cast iron.
2. Joints: Hub-and-spigot, CISPI HSN compression type with ASTM C564 neoprene gaskets or lead and oakum.
3. Encasement: Provide 8 mil minimum polyethylene encasement pipe wrap on all cast iron pipe installed in corrosive soils.
B. Cast Iron Pipe: ASTM A888 and CISPI 301, hubless.
1. Fittings: Cast iron.
2. Joints: ASTM A74 or CISPI 310, neoprene gasket and stainless steel clamp and shield assemblies.
3. Encasement: Provide 8 mil minimum polyethylene encasement pipe wrap on all cast iron pipe installed in corrosive soils.
4. Markings: All pipe and fittings shall be marked with CISPI and NSF trademark.
C. ABS Pipe: ASTM D2661.
1. Fittings: ABS.
2. Joints: Solvent welded with ASTM D2235 cement.
D. PVC Pipe: ASTM D2665 or ASTM F679.
1. Fittings: PVC.
2. Joints: Solvent welded, with ASTM D2564 solvent cement or Push-on, using ASTM F477 elastomeric gaskets.
2.04 SANITARY SEWER PIPING, ABOVE GRADE
A. Cast Iron Pipe: ASTM A 74, service weight.
1. Fittings: Cast iron.
2. Joint Seals: Hub-and-spigot, CISPI HSN compression type with ASTM C 564 neoprene gaskets, or lead and oakum.
B. Cast Iron Pipe: CISPI 301, hubless, service weight.
1. Fittings: Cast iron.
2. Joints: ASTM A74 or CISPI 310, neoprene gaskets and stainless steel clamp-and-shield assemblies.
3. Markings: All pipe and fittings shall be marked with CISPI and NSF trademark.
C. PVC Pipe: ASTM D2665.
1. Fittings: PVC.
2. Joints: Solvent welded, with ASTM D2564 solvent cement.
2.05 WATER PIPING, BURIED BEYOND 5 FEET OF BUILDING
A. Ductile Iron Pipe: AWWA C151/A21.51.
1. Fittings: AWWA C110/A21.10, ductile or gray iron, standard thickness.
2. Joints: AWWA C111/A21.11, styrene butadiene rubber (SBR) or vulcanized SBR gasket with 3/4 inch diameter rods.
3. Encasement: Provide 8 mil minimum polyethylene encasement pipe wrap on all cast iron pipe installed in corrosive soils.
B. Copper Pipe: ASTM B42, hard drawn.
1. Fittings: ASME B16.18, cast copper alloy or ASME B16.22 wrought copper and bronze.
2. Joints: ASTM B32, alloy Sn95 solder.
3. Encasement: Provide 8 mil minimum polyethylene encasement pipe wrap on all copper pipe installed in corrosive soils.
2.06 WATER PIPING, BURIED WITHIN 5 FEET OF BUILDING
A. Copper Pipe: ASTM B42, hard drawn.
1. Fittings: ASME B16.18, cast copper alloy or ASME B16.22 wrought copper and bronze.
2. Joints: ASTM B32, alloy Sn95 solder.
3. Encasement: Provide 8 mil minimum polyethylene encasement pipe wrap on all copper pipe installed in corrosive soils.
B. Ductile Iron Pipe: AWWA C151/A21.51.
1. Fittings: Ductile or gray iron, standard thickness.
2. Joints: AWWA C111/A21.11, styrene butadiene rubber (SBR) or vulcanized SBR gasket with 3/4 inch diameter rods.
3. Encasement: Provide 8 mil minimum polyethylene encasement pipe wrap on all cast iron pipe installed in corrosive soils.
2.07 WATER PIPING, ABOVE GRADE
A. Copper Tube: ASTM B88 (ASTM B 88M), Type L (B), Drawn (H).
1. Fittings: ASME B16.18, cast copper alloy or ASME B16.22, wrought copper and bronze.
2. Joints: ASTM B32, alloy Sn95 solder.
3. Joints: Grooved mechanical couplings.
4. Joints: Mechanical Press Sealed Fittings: Double pressed type, NSF 61 and NSF 372 approved or certified, utilizing EPDM, non-toxic synthetic rubber sealing elements.
2.08 STORM WATER PIPING, BURIED WITHIN 5 FEET OF BUILDING
A. Cast Iron Pipe: ASTM A74 service weight.
1. Fittings: Cast iron.
2. Joint Seals: ASTM C564 neoprene gaskets, or lead and oakum.
3. Encasement: Provide 8 mil minimum polyethylene encasement pipe wrap on all cast iron pipe installed in corrosive soils.
B. PVC Pipe: ASTM D2665, ASTM D3034, or ASTM F679.
1. Fittings: PVC.
2. Joints: Solvent welded, with ASTM D2564 solvent cement or Push-on, using ASTM F477 elastomeric gaskets.
2.09 STORM WATER PIPING, ABOVE GRADE
A. Cast Iron Pipe: ASTM A888 and CISPI 301, hubless, service weight.
1. Fittings: Cast iron.
2. Joints: ASTM A74 or CISPI 310, neoprene gaskets and stainless steel clamp-and-shield assemblies.
3. Markings: All pipe and fittings shall be marked with CISPI and NSF trademark.
4. PVC Pipe: ASTM D2665 or ASTM D3034.
a. Fittings: PVC.
b. Joints: Solvent welded, with ASTM D2564 solvent cement.
2.10 NATURAL GAS PIPING, ABOVE GRADE
A. Steel Pipe: ASTM A53/A53M Schedule 40 black.
1. Fittings: 3" and larger shall be ASME B16.3, malleable iron, or ASTM A234/A234M, wrought steel welding type. Threaded fittings may be used on piping 2 1/2" and smaller, except where noted on the drawings or required by code to be welded.
2. Joints: Threaded or welded to ASME B31.1.
B. Copper Tube: ASTM B 88 (ASTM B 88M), Type K (A) or L (B) annealed.
1. Fittings: ASME B16.26, cast bronze.
2. Joints: Flared.
2.11 PUMPED SEWER PIPING (FORCE MAINS):
A. Copper Pipe: ASTM B42, hard drawn.
1. Fittings: ASME B16.18, cast copper alloy or ASME B16.22 wrought copper and bronze.
2. Joints: ASTM B 32, alloy Sn95 solder.
3. Encasement: Provide 8 mil minimum polyethylene encasement pipe wrap on all copper pipe installed in corrosive soils.
B. Ductile Iron Pipe: AWWA C151/A21.51.
1. Fittings: Ductile or gray iron, standard thickness.
2. Joints: AWWA C111/A21.11, rubber gasket with 3/4 inch (19 mm) diameter rods.
3. Encasement: Provide 8 mil minimum polyethylene encasement pipe wrap on all cast iron pipe installed in corrosive soils.
2.12 CONDENSATE DRAINAGE PIPING AND EQUIPMENT DRAINS, ABOVE GRADE:
A. Copper Tube: ASTM B306, DWV.
1. Fittings: ASME B16.29, wrought copper, or ASME B16.23, sovent.
2. Joints: ASTM B32, alloy Sn50 solder.
B. PVC Pipe: ASTM D2665.
1. Fittings: PVC.
2. Joints: Solvent welded, with ASTM D2564 solvent cement.
2.13 FLANGES, UNIONS, AND COUPLINGS
A. Unions for Pipe Sizes 3 Inches and Under:
1. Ferrous pipe: Class 150 malleable iron threaded unions.
2. Copper tube and pipe: Class 150 bronze unions with soldered joints.
B. Flanges for Pipe Size Over 1 Inch: Ferrous pipe: Class 150 malleable iron threaded or forged steel slip-on flanges; preformed neoprene gaskets; Copper tube and pipe: Class 150 slip-on bronze flanges; preformed neoprene gaskets.
C. Mechanical Couplings for Grooved and Shouldered Pipe joints: Two or more curved housing segments with continuous key to engage pipe groove, circular C-profile gasket, and bolts to secure and compress gasket.
1. Dimensions and Testing: In accordance with AWWA C606.
2. Housing Material: Provide ASTM A47/A47M malleable iron, ductile iron, or galvanized.
3. Gasket Material: EPDM suitable for operating temperature range from minus 30 degrees F to 230 degrees F.
4. Bolts and Nuts: Hot dipped galvanized or zinc-electroplated steel.
5. When pipe is field grooved, provide coupling manufacturer's grooving tools.
D. Dielectric Connections: Union with galvanized or plated steel threaded end, copper solder end, water impervious isolation barrier.
2.14 PIPE HANGERS AND SUPPORTS
A. Provide hangers and supports that comply with MSS SP-58.
B. Plumbing Piping - Drain, Waste, and Vent: Hangers for Pipe Sizes 1/2 Inch to 1-1/2 Inches: Malleable iron, adjustable swivel, split ring; Hangers for Pipe Sizes 2 Inches and Over: Carbon steel, adjustable, clevis; Multiple or Trapeze Hangers: Steel channels with welded spacers and hanger rods; Wall Support for Pipe Sizes to 3 Inches: Cast iron hook; Wall Support for Pipe Sizes 4 Inches and Over: Welded steel bracket and wrought steel clamp; Vertical Support: Steel riser clamp; Floor Support: Cast iron adjustable pipe saddle, lock nut, nipple, floor flange, and concrete pier or steel support; Copper Pipe Support: Carbon steel ring, adjustable, copper plated.
C. Plumbing Piping - Water and Gas: Hangers for Pipe Sizes 1/2 Inch to 1-1/2 Inches: Malleable iron, adjustable swivel, split ring; Hangers for Cold Pipe Sizes 2 Inches and Over: Carbon steel, adjustable, clevis; Hangers for Hot Pipe Sizes 2 Inches to 4 Inches: Carbon steel, adjustable, clevis; Hangers for Hot Pipe Sizes 6 Inches and Over: Adjustable steel yoke, cast iron pipe roll, double hanger; Multiple or Trapeze Hangers: Steel channels with welded supports or spacers and hanger rods; Multiple or Trapeze Hangers for Hot Pipe Sizes 6 Inches and Over: Steel channels with welded supports or spacers and hanger rods, cast iron roll; Wall Support for Pipe Sizes to 3 Inches: Cast iron hook; Wall Support for Pipe Sizes 4 Inches and Over: Welded steel bracket and wrought steel clamp; Wall Support for Hot Pipe Sizes 6 Inches and Over: Welded steel bracket and wrought steel clamp with adjustable steel yoke and cast iron pipe roll; Vertical Support: Steel riser clamp; Floor Support for Cold Pipe: Cast iron adjustable pipe saddle, lock nut, nipple, floor flange, and concrete pier or steel support; Floor Support for Hot Pipe Sizes to 4 Inches: Cast iron adjustable pipe saddle, locknut, nipple, floor flange, and concrete pier or steel support; Floor Support for Hot Pipe Sizes 6 Inches and Over: Adjustable cast iron pipe roll and stand, steel screws, and concrete pier or steel support; Copper Pipe Support: Carbon steel ring, adjustable, copper plated.
D. Hanger fasteners: Attach hangers to structure using appropriate fasteners.
E. Utilize galvanized steel pipe hangers and supports in all wet, damp and corrosive environments, including all exterior locations.
2.15 MANUFACTURED SLEEVE-SEAL SYSTEMS:
A. Modular/Mechanical Seal:
1. Synthetic rubber interlocking links continuously fill annular space between pipe and wall/casing opening.
2. Provide watertight seal between pipe and wall/casing opening.
3. Elastomer element size and material in accordance with manufacturer's recommendations.
4. Glass reinforced plastic pressure end plates.
2.16 GATE VALVES (Exterior Utility Service Only)
A. Manufacturers:
1. Conbraco Industries
2. Nibco, Inc
3. Milwaukee Valve Company
B. Up To and Including 3 Inches: MSS SP-80, Class 125, bronze body, bronze trim, rising stem, handwheel, inside screw, solid wedge disc, solder or threaded ends. Provide extension to grade and valve box per local jurisdiction and utility company standards. Post-indicator type were used for fire protection service or when indicated on the Drawings.
C. 2 Inches and Larger: MSS SP-70, Class 125, iron body, bronze trim, outside screw and yoke, handwheel, solid wedge disc, flanged ends. Provide extension to grade and valve box per local jurisdiction and utility company standards. Post-indicator type were used for fire protection service or when indicated on the Drawings.
2.17 BALL VALVES
A. Manufacturers:
1. Conbraco Industries
2. Nibco, Inc
3. Milwaukee Valve Company
B. Construction, 4 Inches and Smaller: MSS SP-110, Class 150, 400 psi CWP, bronze, two piece body, chrome plated brass ball, regular port, teflon seats and stuffing box ring, blow-out proof stem, lever handle, solder or threaded ends.
2.18 BUTTERFLY VALVES
A. Manufacturers:
1. Hammond Valve
2. Crane Co
3. Milwaukee Valve Company
B. Construction 1-1/2 Inches and Larger: MSS SP-67, 200 psi CWP, cast or ductile iron body, nickel-plated ductile iron disc, resilient replaceable EPDM seat, wafer, lug, or grooved ends, extended neck, 10 position lever handle.
C. Provide gear operators for valves 8 inches and larger, and chain-wheel operators for valves mounted over 8 feet above floor.
2.19 FLOW CONTROLS
A. Manufacturers:
1. ITT Bell & Gossett
2. Griswold Controls
3. Taco, Inc.
B. Construction: Class 125, Brass or bronze body with union on inlet, temperature and pressure test plug on inlet and outlet.
C. Calibration: Automatically control flow within 5 percent of selected rating, over operating pressure range of 10 times minimum pressure required for control, maximum minimum pressure 3.5 psi.
2.20 WATER PRESSURE REDUCING VALVES
A. Manufacturers:
1. Amtrol Inc
2. Cla-Val Co
3. Watts Regulator Company
B. Up to 2 Inches: ASSE 1003, bronze body, stainless steel and thermoplastic internal parts, fabric reinforced diaphragm, strainer, threaded single union ends.
C. Over 2 Inches: ASSE 1003, cast iron body with interior lining complying with AWWA C550, bronze fitted, elastomeric diaphragm and seat disc, flanged.
2.21 RELIEF VALVES
A. Pressure Relief:
1. Manufacturers:
a. Cla-Val Co
b. Henry Technologies
c. Watts Regulator Company
2. AGA Z21.22 certified, bronze body, teflon seat, steel stem and springs, automatic, direct pressure actuated.
B. Temperature and Pressure Relief:
1. Manufacturers:
a. Cla-Val Co
b. Henry Technologies
c. Watts Regulator Company
2. AGA Z21.22 certified, bronze body, teflon seat, stainless steel stem and springs, automatic, direct pressure actuated, temperature relief maximum 210 degrees F, capacity ASME BPVC-IV certified and labeled.
2.22 STRAINERS
A. Manufacturers:
1. Armstrong International, Inc
2. Green Country Filtration
3. WEAMCO
B. Size 2 inch and Under: Threaded brass body for 175 psi CWP, Y pattern with 1/32 inch stainless steel perforated screen.
1. Class 150, threaded bronze body 300 psi CWP, Y pattern with 1/32 inch stainless steel perforated screen.
C. Size 1-1/2 inch to 4 inch: Class 125, flanged iron body, Y pattern with 1/16 inch stainless steel perforated screen.
D. Size 5 inch and Larger: Class 125, flanged iron body, basket pattern with 1/8 inch stainless steel perforated screen.
2.23 ACCESS DOORS
A. Stealth access panel units as manufactured by Wind-lock, or equal, shall be prefabricated with high-density gypsum, reinforced with continuous random filament glass fiber mat and structural reinforcing as required. Access panel shall be designed to be flush, with no exposed hinges, catches, etc. and ready for any finishes, paint or texturing to match the surrounding drywall surfaces. Access panels shall be taped and mudded into the drywall system to achieve a uniform,

Schnackel engineers
New York ■ Miami ■ Omaha ■ Los Angeles ■ Seattle ■ Honolulu
800-581-0963 www.schnackel.com

SE JOB#: 250720

COPYRIGHT 2024 KTGY GROUP INC. These plans and specifications are protected by United States copyright law and may not be used, reproduced, distributed, transmitted, displayed, or modified in any way without the prior written consent of KTGY Group, Inc. or the authorized copyright holder or licensee.

ktgy

17911 Von Karman Ave.
Suite 200
Irvine, CA 92614
ktgy.com
949.851.2133

ktgy Project Number
Contact DORINA WATSON
Email dwatson@ktgy.com
Senior Director DAVID SCHMITZ
Designer RUSSEL ROSALES

Developer
SEDC
23906 SOBOBA ROAD
SAN JACINTO, CA 92581

PHONE: (951) 663-2058

SOBOBA SOVOVATUM VILLAGE PHASE-2
SAN JACINTO, CA

No.	DATE	DESCRIPTION

Client is responsible for notifying architect in writing for any discovered errors or omissions in the plans and specifications during construction of the project. Failure for Client to notify Architect of any known errors or omissions in the plans or specifications, and proceeding with constructing the portion of work shown in the plans or specifications containing known errors or omissions shall be a waiver by Client for any liability of Architect for such known errors or omissions. Client releases Architect for any liability for such portions of work, and Architect shall not be liable for any delay damages, change orders, repair costs, removal or demolition costs, or replacement of any such portions of work.

2026-05-26, ISSUED FOR BID

Sheet Name
PLUMBING SPECIFICATIONS

P4-14

integral appearance with a minimum of visibility. Door panels shall be lift out type, unless in-ceiling clearances require a hinged application.
1. Glass Content: 5 to 6 percent by weight
2. Density: 103 to 112 pcf
3. Shell Thickness: 1/8 to 3/16 inch (3 to 5 mm) nominal
4. Flammability: Flame Spread Index of 0
5. Smoke Development Index of 0
6. Flexural Strength: 300-4000 PSI
7. Compressive Strength: 7600 PSI
8. Hardness (Barcol) 50
9. Impact Resistance 8.0 ft.-lb./in.2

B. Fire rated access doors as manufactured by Acudor Products Inc, or equal, shall be prefabricated, UL listed and fire rated as required to meet the fire resistance ratings indicated on the Architectural drawings or as required to meet the fire resistance ratings in the field. Provide stainless steel access doors in all wet, damp or corrosive environments.
1. Door / Door Frame: Steel or Stainless Steel, 16 gage door, 16 gage frame, minimum.
2. Mounting Frame: Steel or Stainless Steel, flush to frame with reinforced edges, flange to be 1" wide.
3. Hinge: Concealed
4. Standard Latch: Universal self-latching bolt, operated by either a knurled knob or flush key.
5. Finish: Steel: 5 stage iron phosphate preparation with prime coat of white alkyd baked-on enamel. Stainless Steel: #4 satin polish.

PART 3 EXECUTION
3.01 EXAMINATION
A. Verify that excavations are to required grade, dry, and not over-excavated.
3.02 PREPARATION
A. Ream pipe and tube ends. Remove burrs. Bevel plain end ferrous pipe.
B. Remove scale and dirt, on inside and outside, before assembly.
C. Prepare piping connections to equipment with flanges or unions.
3.03 INSTALLATION
A. Install in accordance with manufacturer's instructions.
B. Provide non-conducting dielectric connections wherever jointing dissimilar metals.
C. Route piping in orderly manner and maintain gradient. Route parallel and perpendicular to walls.
D. Install piping to maintain headroom, conserve space, and not interfere with use of space.
E. Group piping whenever practical at common elevations.
F. Install piping to allow for expansion and contraction without stressing pipe, joints, or connected equipment.
G. Provide clearance in hangers and from structure and other equipment for installation of insulation and access to valves and fittings.
H. Locate all valves and control elements in accessible areas wherever possible to avoid access doors. Provide access where valves and fittings are not exposed or located in accessible areas. Provide ceiling access doors for access to all valves and control elements located above inaccessible ceiling areas. Provide minimum 12 x 12 inch size for hand access, 18 x 18 inch size for shoulder access, and as indicated. Provide 4 x 4 inch for shut off valves only. Provide rated access doors where installed in fire rated construction. Review locations prior to fabrication.
I. Establish elevations of buried piping outside the building to ensure not less than the maximum local frost depth cover. Install tracer wire on all plastic piping outside the building.
J. Install vent piping penetrating roofed areas to maintain integrity of roof assembly.
K. All roofing penetrations shall be flashed and weather sealed by the roofing manufacturer's authorized roofing contractor at this Contractor's expense. This Contractor shall contract with the factory authorized roofing contractor for the specific roofing system applicable to this Project. The use of an unauthorized roofing contractor may result in removal and replacement of the penetration systems at this Contractor's expense.
L. All sanitary vent system terminations shall be a minimum of ten feet from any fresh air intake and twenty-five feet on medical facilities (hospitals, clinics, etc.)
M. Where pipe support members are welded to structural building framing, scrape, brush clean, and apply one coat of zinc rich primer to welding.
N. Provide support for utility meters in accordance with requirements of utility companies.
O. Prepare exposed, unfinished pipe, fittings, supports, and accessories ready for finish painting.
P. Paint all exterior above grade piping with a minimum of two coats of paint, color to match roof or wall surface to which it is attached.
1. Copper pipe Apply vinyl etch primer immediately following cleaning. EXT 5.5A Alkyd: Vinyl Wash Primer MPI #80, Alkyd MPI #0, 9 or 94, Semi-gloss.
2. Steel pipe: Apply alkyd metal primer immediately following cleaning. EXT 5.1D Alkyd: Alkyd Metal Primer MPI #79, Alkyd MPI # 94, semi-gloss.
3. Plastic pipe: Apply alkyd bonding primer immediately following cleaning. EXT 6.6B Alkyd: Bonding Primer MPI #17 or 69, Alkyd MPI #9, 9 or 94.
Q. Excavate, bedding and backfill shall be in accordance with applicable sections of this Specification.
R. Pipe vents from gas pressure reducing valves to outdoors and terminate in weather proof hood, unless of the ventless design and approved by the local jurisdiction and the local utility company regulates.
S. Provide dirt legs as detailed on the Drawings on all gas piping connections to appliances.
T. The use of sanitary tee fittings will not be permitted. Utilize wye fittings in lieu of tee fittings for all intersections of drainage piping.
U. Provide sleeves when penetrating footings, masonry walls and floors. Seal and fire stop pipe and sleeve penetrations to achieve fire resistance equivalent to fire separation required. All penetrations through footings and floors shall be sealed water tight.
V. Wherever piping is located within 1.5 inches of the nearest edge of studs, joists, rafters or similar members, provide minimum 0.062 inch thick steel protective shield plates extending 2" above and below the pipe being protected. Shield plates may be omitted on cast iron piping only.
W. Inserts: Provide inserts for placement in concrete formwork; Provide inserts for suspending hangers from reinforced concrete slabs and sides of reinforced concrete beams; Provide hooked rod to concrete reinforcement section for inserts carrying pipe over 4 inches; Where concrete slabs form finished ceiling, locate inserts flush with slab surface; Where inserts are omitted, drill through concrete slab from below and provide through-bolt with recessed square steel plate and nut recessed into and grouted flush with slab.
X. Pipe Hangers and Supports: Install in accordance with ASME B31.9, ASTM F 708, and MSS SP-89; Support horizontal piping as scheduled; Install hangers to provide minimum 1/2 inch space between finished covering and adjacent work; Place hangers within 12 inches of each horizontal elbow; Use hangers with 1-1/2 inch minimum vertical adjustment. Design hangers for pipe movement without disengagement of supported pipe; Support vertical piping at every other floor. Support riser piping independently of connected horizontal piping; Where several pipes can be installed in parallel and at same elevation, provide multiple or trapeze hangers; Provide copper plated hangers and supports for copper piping; Prime coat exposed steel hangers and supports. Hangers and supports located in crawl spaces, pipe shafts, and suspended ceiling spaces are not considered exposed; Provide hangers adjacent to motor driven equipment with vibration isolation; Support cast iron drainage piping at every joint.
Y. Manufactured Sleeve-Seal Systems:
1. Install manufactured sleeve-seal systems in sleeves located in grade slabs and exterior concrete walls at piping entrances into building.
2. Provide sealing elements of the size, quantity, and type required for the piping and sleeve inner diameter or penetration diameter.
3. Locate piping in center of sleeve or penetration.
4. Install field assembled sleeve-seal system components in annular space between sleeve and piping.
5. Tighten bolting for a water-tight seal.
6. Install in accordance with manufacturer's recommendations.
Z. When installing more than one piping system material, ensure system components are compatible and joined to ensure the integrity of the system. Provide necessary joining fittings. Ensure flanges, union, and couplings for servicing are consistently provided.
3.04 APPLICATION
A. Use grooved mechanical couplings and fasteners only in accessible locations.
B. Install unions downstream of valves and at equipment or apparatus connections.
C. Install brass male adapters each side of valves in copper piped system. Solder adapters to pipe.
D. Install ball or butterfly valves for shut-off and to isolate equipment, part of systems, or vertical risers.
E. Install globe, ball, or butterfly valves for throttling, bypass, or manual flow control services.
F. Provide lug end butterfly valves adjacent to equipment when provided to isolate equipment.
G. Provide spring loaded check valves on discharge of water pumps.
H. Provide plug or gas service rated ball valves in natural gas systems for shut-off service.
I. Provide automatic flow control valves in water recirculating systems where indicated. Utilize 0.5 gpm flow unless otherwise indicated on the drawings.
J. Provide spring loaded check valves when located on the discharge of pumps.
3.05 TOLERANCES
A. Interior Drainage Piping: Establish invert elevations within 1/2 inch vertically of location indicated and slope to drain at minimum of 1/4 inch per foot slope, unless noted otherwise on the Drawings.
B. Exterior Drainage Piping: Establish invert elevations within 1/2 inch vertically of location indicated and slope to drain at a minimum of 1% grade, unless noted otherwise on the Drawings. Verify all invert elevations prior to commencing work.
C. Water Piping: Slope at minimum of 1/32 inch per foot and arrange to drain at low points.
3.06 DISINFECTION OF DOMESTIC WATER PIPING SYSTEM
A. Prior to starting work, verify system is complete, flushed and clean.
B. Ensure Ph of water to be treated is between 7.4 and 7.6 by adding alkali (caustic soda or soda ash) or acid (hydrochloric).
C. Inject disinfectant, free chlorine in liquid, powder, tablet or gas form, throughout system to obtain 50 to 80 mg/L residual.
D. Bleed water from outlets to ensure distribution and test for disinfectant residual at minimum 15 percent of outlets.
E. Maintain disinfectant in system for 24 hours.
F. If final disinfectant residual test less than 25 mg/L, repeat treatment.
G. Flush disinfectant from system until residual equal to that of incoming water or 1.0 mg/L.
H. Take samples no sooner than 24 hours after flushing, from 10 percent of outlets and from water entry, and analyze in accordance with AWWA C651.
3.07 SERVICE CONNECTIONS
A. Provide new sanitary and storm sewer services as indicated on the Drawings. Before commencing work check invert elevations required for sewer connections, confirm inverts and ensure that these can be properly connected with slope for drainage and cover to avoid freezing. Removal, rework or corrections to sewer services as a result of the Contractor's failure to confirm invert elevations prior to the start of construction, regardless of the information contained on the Drawings, shall be the sole responsibility of the Contractor. Report any discrepancies difficulties to the Engineer prior to the start of construction.
B. Provide new water service complete with approved reduced pressure backflow preventer and water meter with by-pass valves (where permitted by local authorities), pressure reducing valve (where pressure exceeds 80 psi); Provide sleeve in wall for service main and support at wall with reinforced concrete bridge. Calk enlarged sleeve and make watertight with pliable material. Anchor service main inside to concrete wall; Provide 18 gauge galvanized sheet metal sleeve around service main to 2 inches above floor and 3 feet minimum below grade. Size for minimum of 2 inches of loose batt insulation stuffing.
C. Provide new gas services complete with gas meter and regulators. Gas service distribution piping shall have initial minimum pressure as indicated on the drawings. Provide appropriately sized regulators on each line serving gas appliances, sized in accordance with the manufacturers recommendations based on the sizing parameters indicated on the Drawings. The entire gas service and piping installation shall comply with the local jurisdiction and the regulations of the serving utility.
3.08 SCHEDULES
A. Pipe Hanger Spacing:
1. Metal Piping:
a. Pipe size: 1/2 inches to 1-1/4 inches: Maximum hanger spacing: 6.5 ft; Hanger rod diameter: 3/8 inches.
b. Pipe size: 1-1/2 inches to 2 inches: Maximum hanger spacing: 10 ft; Hanger rod diameter: 3/8 inch.
c. Pipe size: 2-1/2 inches to 3 inches: Maximum hanger spacing: 10 ft; Hanger rod diameter: 1/2 inch.
d. Pipe size: 4 inches to 6 inches: Maximum hanger spacing: 10 ft; Hanger rod diameter: 5/8 inch.
2. Plastic Piping:
a. Pipe size: 1/2 inches to 6 inches: Maximum hanger spacing: 6 ft; Hanger rod diameter: 3/8 inch.

END OF SECTION

SECTION 221006 - PLUMBING PIPING SPECIALTIES

PART 1 GENERAL
1.01 SECTION INCLUDES
A. Drains
B. Cleanouts
C. Hose bibbs
D. Hydrants
E. Backflow preventers
F. Water hammer arrestors
G. Interceptors
H. Thermostatic mixing valves.

PART 2 PRODUCTS
2.01 BACKFLOW PREVENTERS
A. Manufacturers:
1. Conbraco Industries
2. Watts Regulator Company
3. Zurn Industries, Inc
2.02 WATER HAMMER ARRESTORS
A. Manufacturers:
1. Jay R. Smith Manufacturing Company
2. Watts Regulator Company
3. Zurn Industries, Inc.
B. Water Hammer Arrestors: Stainless steel or copper construction, bellows type sized in accordance with PDI-WH 201, precharged suitable for operation in temperature range 34 to 250 degrees F and maximum 150 psi working pressure.
2.03 SUMPS
A. Glass fiber reinforced or precast concrete with required openings and drainage fittings.
B. Cover: 3/8 inch thick checkered steel plate with gasket seal frames and anchor bolts.

PART 3 EXECUTION
3.01 INSTALLATION
A. Install in accordance with manufacturer's instructions.
B. Extend cleanouts to finished floor or wall surface. Lubricate threaded cleanout plugs with mixture of graphite and linseed oil. Ensure clearance at cleanout for rodding of drainage system.
C. Encase exterior cleanouts in concrete flush with grade.
D. Install floor cleanouts at elevation to accommodate finished floor for a completely flush installation.
E. Install approved potable water protection devices on plumbing lines where contamination of domestic water may occur; on boiler feed water lines, janitor rooms, fire sprinkler systems, premise isolation, irrigation systems, flush valves, drink mixing stations, interior and exterior hose bibbs and all other locations required by Codes.
F. Pipe relief from backflow preventer to nearest drain.
G. Install water hammer arrestors complete with accessible isolation valve on hot and cold water supply piping to all fixtures and equipment.

END OF SECTION

SECTION 223000 - PLUMBING EQUIPMENT

PART 1 GENERAL
1.01 SECTION INCLUDES
A. Water Heaters
1. Commercial gas fired
B. Water softeners
C. Pumps
1. Circulators

PART 2 PRODUCTS
2.01 WATER HEATER MANUFACTURERS
A. A.O. Smith Water Products Co.
B. Bock Water Heaters, Inc.
C. Rheem Manufacturing Company.
D. PVI.
2.02 COMMERCIAL GAS FIRED WATER HEATERS
A. Type: Automatic, natural gas-fired, vertical storage.
B. Performance:
1. Equipment performance and accessories shall be as scheduled on the Drawings and specified herein. Inclusion in both locations is not a prerequisite to inclusion in the Contract. Equipment and accessories specified in either location shall be included in the Contract. Provide all necessary accessories and connections as required for a complete, functional system.
2. Maximum Working Pressure: 150 psig (1000 kPa).
C. Tank: Glass lined welded steel ASME labeled; multiple flue passages, 4 inch (100 mm) diameter inspection port, thermally insulated with minimum 2 inches (50 mm) glass fiber, polyurethane or foamed plastic, encased in corrosion-resistant steel jacket; baked-on enamel finish; floor shield and legs.
D. Accessories:
1. Water Connections: Brass.
2. Dip Tube: Brass.
3. Drain valve.
4. Anode: Magnesium.
5. Temperature and Pressure Relief Valve: ASME labeled.
E. Certified For The Following Applications:
1. Automatic storage water heater.
2. Automatic circulating tank water heater.
3. For operation at 180 degrees F (82 degrees C).
4. For operation on combustible floors.
5. For operation in high altitude installations.
F. Controls: Automatic water thermostat with temperature range adjustable from 120 to 180 degrees F (49 to 82 degrees C), automatic reset high temperature limiting thermostat factory set at 195 degrees F (90 degrees C), gas pressure regulator, multi-ribbon or tubular burner, 100 percent safety shut-off pilot and thermocouple, flue baffle and draft hood.
2.03 WATER SOFTENERS
A. Manufacturers:
1. Culligan International Company
2. Sterling Water Systems, LLC.
B. Performance:
1. Equipment performance and accessories shall be as scheduled on the Drawings and specified herein. Inclusion in both locations is not a prerequisite to inclusion in the Contract. Equipment and accessories specified in either location shall be included in the Contract. Provide all necessary accessories and connections as required for a complete, functional system.
2. Electrical Characteristics:
a. As indicated on the Drawings.
C. Softener Tank:
1. Glassfiber reinforced plastic tank.
D. Brine Tank:
1. Glassfiber reinforced plastic tank.
E. Microprocessor Based Control: Brass control valve cycled to regenerate after adjustable metered quantity of water flow.
2.04 IN-LINE CIRCULATOR PUMPS
A. Manufacturers:
1. Armstrong Pumps Inc
2. Bell & Gossett
3. Sterling Fluid Systems
4. Taco, Inc.
B. Casing: Bronze, rated for 125 psig (860 kPa) working pressure, with stainless steel rotor assembly.
C. Impeller: Bronze.
D. Shaft: Alloy steel with integral thrust collar and two oil lubricated bronze sleeve bearings.
E. Seal: Carbon rotating against a stationary ceramic seat.
F. Drive: Flexible coupling.
G. Performance:
1. Equipment performance and accessories shall be as scheduled on the Drawings and specified herein. Inclusion in both locations is not a prerequisite to inclusion in the Contract. Equipment and accessories specified in either location shall be included in the Contract. Provide all necessary accessories and connections as required for a complete, functional system.
2. Electrical Characteristics:
a. As indicated on the Drawings.
b. Verify that proper power supply is available prior to ordering equipment. Verify proper voltage, phase and current rating of power supply and inform Engineer of any deviations prior to order, connection of equipment or start-up. Responsibility for verification of proper power supply voltage and any product returns or damage resulting from incorrect connections shall rest with this Contractor.

PART 3 EXECUTION
3.01 INSTALLATION
A. Install plumbing equipment in accordance with manufacturer's instructions, as required by code, and complying with conditions of certification, if any.
B. Provide concrete equipment bases for all floor mounted plumbing equipment.
C. Coordinate with plumbing piping and related fuel piping, gas venting, and electrical work as applicable to achieve operating system.
D. Pumps:
1. Ensure shaft length allows sump pumps to be located minimum 24 inches below lowest invert into sump pit and minimum 6 inches clearance from bottom of sump pit.
2. Provide air cock and drain connection on horizontal pump casings.
3. Provide line sized isolating valve and strainer on suction and line sized soft seated check valve and balancing valve on discharge.
4. Decrease from line size with long radius reducing elbows or reducers. Support piping adjacent to pump such that no weight is carried on pump casings. Provide supports under elbows on pump suction and discharge line sizes 4 inches and over.
5. Ensure pumps operate at specified system fluid temperatures without vapor binding and cavitation, are non-overloading in parallel or individual operation, and operate within 25 percent of midpoint of published maximum efficiency curve.
6. Align and verify alignment of base mounted pumps prior to start-up.
7. Verify that proper power supply is available prior to ordering equipment. Verify proper voltage, phase and current rating of power supply and inform Engineer of any deviations prior to order, connection of equipment or start-up. Responsibility for verification of proper power supply voltage and any product returns or damage resulting from incorrect connections shall rest with this Contractor.
8. Refer to vibration isolation requirements specified in Vibration Isolation section of this Specification.

END OF SECTION

SECTION 224000 - PLUMBING FIXTURES

PART 1 GENERAL
1.01 SECTION INCLUDES
A. All plumbing fixtures as scheduled on the Drawings.

PART 2 PRODUCTS
2.01 GENERAL REQUIREMENTS
A. Potable Water Systems: Provide plumbing fittings and faucets that comply with NSF 61 and NSF 372 for maximum lead content; label pipe and fittings.
2.02 REGULATORY REQUIREMENTS
A. Code or utility company requirements shall supersede any conflicting requirements of this section.

PART 3 EXECUTION
3.01 EXAMINATION
A. Verify that walls and floor finishes are prepared and ready for installation of fixtures.
B. Verify that electric power is available and of the correct characteristics.
C. Confirm that millwork is constructed with adequate provision for the installation of counter top lavatories and sinks.
3.02 PREPARATION
A. Rough-in fixture piping connections in accordance with minimum sizes indicated in fixture rough-in schedule for particular fixtures.
3.03 INSTALLATION
A. Install each fixture with trap, easily removable for servicing and cleaning.
B. Install each fixture using brass angle ball stop valves for hot and cold water connections as applicable. Non-metallic valves or non-ball valve type stops will not be accepted.
C. Provide chrome plated rigid or flexible supplies to fixtures with specified stops, reducers, and escutcheons.
D. Install components level and plumb.
E. Install and secure fixtures in place with wall carriers, wall supports and bolts.
F. Seal fixtures to wall and floor surfaces with sealant, color to match fixture.
G. Solidly attach floor mounted water closets to floor with lag screws. Lead flashing is not intended hold fixture in place.
H. Install fixtures and fittings in accordance with the manufacturer's instructions and in accordance with the ICC (IPC) or UPC.
I. When fixtures require both hot water and cold water supplies, provide the hot water supply to the left of the cold water supply.
J. Install off-the-floor supports to conform to ASME A112.6.1M.
3.04 INTERFACE WITH WORK OF OTHER SECTIONS
A. Review millwork shop drawings. Confirm location and size of fixtures and openings before rough-in and installation.
3.05 CLEANING
A. Clean plumbing fixtures and equipment.
3.06 PROTECTION
A. Protect installed products from damage due to subsequent construction operations.
B. Repair or replace damaged products before date of Substantial Completion.
3.07 FIELD INSPECTION
A. Continue inspection during installation and testing.
B. Correct or replace all rejected equipment prior to installation.

END OF SECTION

COPYRIGHT 2024 KTGY GROUP INC. These plans and specifications are protected by United States copyright law and may not be used, reproduced, distributed, transmitted, displayed, or modified in any way without the prior written consent of KTGY Group, Inc. or the authorized copyright holder or licensee.

SE JOB#: 250720

ktgy
17911 Von Karman Ave.
Suite 200
Irvine, CA 92614
ktgy.com
949.851.2133

ktgy Project Number
Contact DORINA WATSON
Email dwatson@ktgy.com
Senior Director DAVID SCHMITZ
Designer RUSSEL ROSALES

Developer
SEDC
23906 SOBOBA ROAD
SAN JACINTO, CA 92581

PHONE: (951) 663-2058

SOBOBA SOVOVATUM VILLAGE
PHASE-2
-
SAN JACINTO, CA

No.	DATE	DESCRIPTION

Client is responsible for notifying architect in writing for any discovered errors or omissions in the plans and specifications during construction of the project. Failure for Client to notify Architect of any known errors or omissions in the plans or specifications, and proceeding with constructing the portion of work shown in the plans or specifications containing known errors or omissions shall be a waiver by Client for any liability of Architect for such known errors or omissions. Client releases Architect for any liability for such portions of work, and Architect shall not be liable for any delay damages, change orders, repair costs, removal or demolition costs, or replacement of any such portions of work.

2026-05-26, ISSUED FOR BID

Sheet Name
PLUMBING SPECIFICATIONS

Schnackel engineers
800-381-0963 www.schnackel.com

P4-15

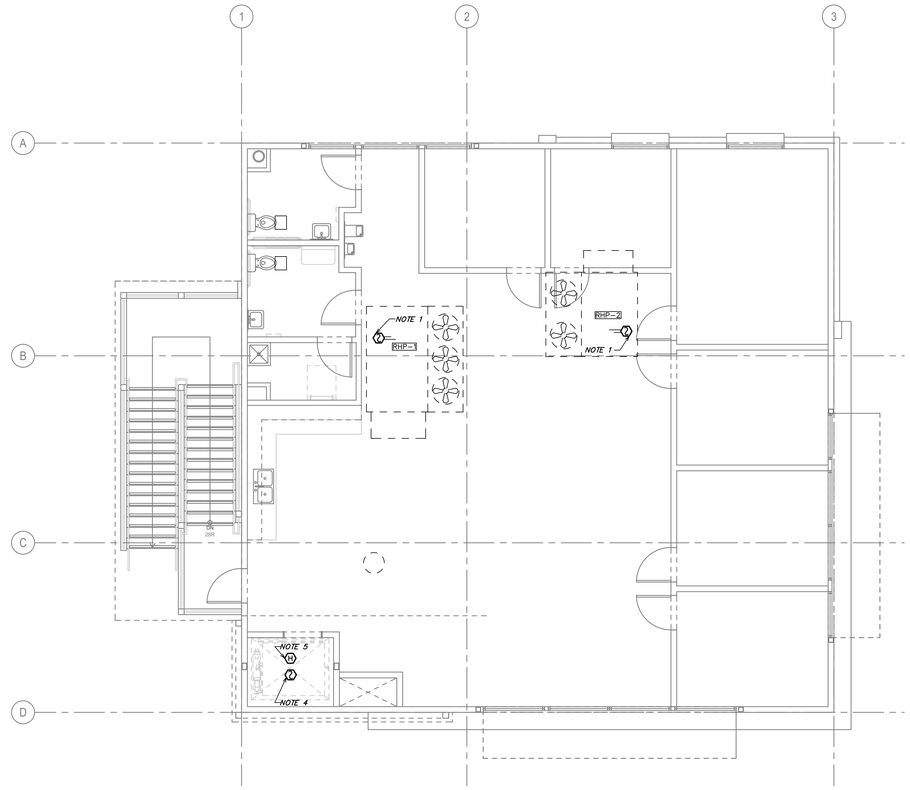

2 FIRE ALARM PLAN - SECOND FLOOR
3/16" = 1'-0"

NORTH

GENERAL FIRE ALARM NOTES:

A. THE CONTRACTOR SHALL PREPARE SHOP DRAWINGS (INSTALLATION DOCUMENTS) COMPLYING WITH NFPA 72 SECTION 7.4 BASED ON THE MANUFACTURER-SPECIFIC EQUIPMENT AND COMPONENTS INTENDED TO BE INSTALLED.
B. INFORMATION ON THE DRAWINGS SERVES AS DESIGN (LAYOUT) DOCUMENTATION PER NFPA 72 SECTION 7.3 PRIMARILY FOR THE PURPOSE OF BIDDING, ESTABLISHING PERFORMANCE CRITERIA, CONVEYING INTENT, AND PRELIMINARY PERMIT APPROVAL. AS SUCH, THE DRAWINGS MAY NOT SHOW EVERY COMPONENT REQUIRED FOR A COMPLETE INSTALLATION. THE CONTRACTOR SHALL INCLUDE ALL COMPONENTS REQUIRED FOR A COMPLETE, CODE-COMPLIANT DESIGN AND INSTALLATION IN THE SHOP DRAWINGS (INSTALLATION DOCUMENTS).
C. THE CONTRACTOR SHALL SUBMIT SHOP DRAWINGS (INSTALLATION DOCUMENTS) TO THE AUTHORITY HAVING JURISDICTION FOR REVIEW AND APPROVAL.
D. INCLUDE ALL COSTS ASSOCIATED WITH THE DEVELOPMENT OF THE SHOP DRAWINGS (INSTALLATION DOCUMENTS) AND ALL PERMIT FEES IN THE BID.
E. SEE THE SPECIFICATIONS FOR ADDITIONAL REQUIREMENTS.

KEYED FIRE ALARM NOTES:

1. FURNISH DUCT SMOKE DETECTOR AND RELAY FOR HVAC UNIT SUPPLY FAN SHUTDOWN. FOR INSTALLATION BY THE MECHANICAL CONTRACTOR. PROVIDE A REMOTE KEYED TEST STATION WITH VISUAL STATUS ANNUNCIATOR AND COORDINATE INSTALLATION LOCATION WITH AUTHORITY HAVING JURISDICTION AND OWNER PRIOR TO ROUGH-IN. DUCT SMOKE DETECTORS ASSOCIATED WITH HVAC UNITS THAT SHARE A COMMON AIR PLENUM SHALL BE INTERLOCKED WITH ONE ANOTHER SUCH THAT ACTIVATION OF ANY ONE OF THE ASSOCIATED DUCT SMOKE DETECTORS WILL SHUT DOWN SUPPLY FANS OF ALL HVAC UNITS SHARING THE COMMON AIR PLENUM. PROVIDE ALL FINAL WIRING FOR A COMPLETE AND FUNCTIONAL SYSTEM.
2. PROVIDE A SMOKE DETECTOR TO INITIATE PHASE I EMERGENCY RECALL.
3. PROVIDE HEAT DETECTOR(S) TO ACTIVATE THE MAIN LINE POWER SHUNT-TRIP WHEN THE ROOM/SPACE IS EQUIPPED WITH FIRE SUPPRESSION SPRINKLERS. PROVIDE HEAT DETECTOR(S) AS REQUIRED SUCH THAT A HEAT DETECTOR IS LOCATED WITHIN 24 INCHES OF EACH SPRINKLER HEAD WITHIN THE AREA.
4. PROVIDE A SMOKE DETECTOR TO INITIATE PHASE I EMERGENCY RECALL WHEN THE HOISTWAY IS EQUIPPED WITH FIRE SUPPRESSION SPRINKLERS.
5. PROVIDE HEAT DETECTOR(S) TO ACTIVATE THE MAIN LINE POWER SHUNT-TRIP WHEN THE HOISTWAY IS EQUIPPED WITH FIRE SUPPRESSION SPRINKLERS. PROVIDE HEAT DETECTOR(S) AS REQUIRED SUCH THAT A HEAT DETECTOR IS LOCATED WITHIN 24 INCHES OF EACH SPRINKLER HEAD WITHIN THE HOISTWAY.
6. PROVIDE HEAT DETECTOR(S) TO ACTIVATE THE MAIN LINE POWER SHUNT-TRIP WHEN THE PIT IS EQUIPPED WITH FIRE SUPPRESSION SPRINKLERS. PROVIDE HEAT DETECTOR(S) AS REQUIRED SUCH THAT A HEAT DETECTOR IS LOCATED WITHIN 24 INCHES OF EACH SPRINKLER HEAD WITHIN THE PIT.
7. PROVIDE EXTERIOR WEATHERPROOF NOTIFICATION APPLIANCE MOUNTED DIRECTLY ABOVE THE FIRE DEPARTMENT CONNECTION POINT, COORDINATE FINAL LOCATION WITH THE FIRE SPRINKLER CONTRACTOR PRIOR TO ROUGH-IN.

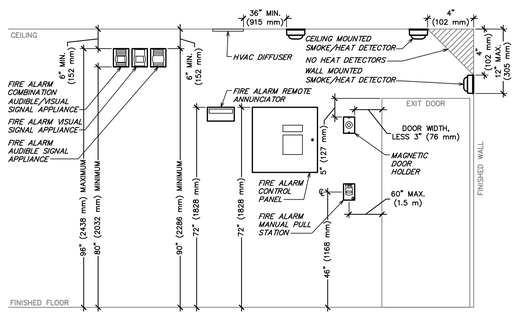

3 TYPICAL DEVICE ELEVATION DETAIL
NOT TO SCALE

FIRE ALARM SYMBOL LEGEND (SOME MAY NOT BE USED)			
SYMBOL	DESCRIPTION	SYMBOL	DESCRIPTION
FACU	FIRE ALARM CONTROL UNIT	PIV	FIRE SPRINKLER POST INDICATOR VALVE WITH VALVE SUPERVISORY SWITCH (TAMPER SWITCH)
EVAC	VOICE EVACUATION CONTROL UNIT	F	FIRE ALARM BELL
CELL	CELLULAR COMMUNICATOR		FIRE ALARM STROBE
FAA	FIRE ALARM ANNUNCIATOR	F	FIRE ALARM HORN
NAC	FIRE ALARM NOTIFICATION APPLIANCE POWER SUPPLY		FIRE ALARM COMBINATION HORN AND STROBE
FATC	FIRE ALARM TERMINAL CABINET	F	FIRE ALARM SPEAKER
F	FIRE ALARM MANUAL PULL STATION/FIRE ALARM BOX		FIRE ALARM COMBINATION SPEAKER AND STROBE
XX	SMOKE DETECTOR, WALL MOUNTED, PHOTOELECTRIC UNLESS INDICATED OTHERWISE (XX = MODIFIER)	HFSS	HOOD FIRE SUPPRESSION SYSTEM
XX	SMOKE DETECTOR, CEILING MOUNTED, PHOTOELECTRIC UNLESS INDICATED OTHERWISE (XX = MODIFIER)	M	HOOD FIRE SUPPRESSION SYSTEM MANUAL PULL STATION
	DUCT SMOKE DETECTOR	MM	ADDRESSABLE MONITOR MODULE
RTS	DUCT SMOKE DETECTOR REMOTE ANNUNCIATOR/TEST STATION #RTS151KEY WHEN SUPERVISED BY CONTROL UNIT #RTS2-AOS WHEN STAND-ALONE	RM	ADDRESSABLE RELAY MODULE
		CM	ADDRESSABLE CONTROL MODULE
XX	HEAT DETECTOR, WALL MOUNTED, FIXED TEMPERATURE UNLESS INDICATED OTHERWISE (XX = MODIFIER)	IM	ADDRESSABLE ISOLATION MODULE
XX	HEAT DETECTOR, CEILING MOUNTED, FIXED TEMPERATURE UNLESS INDICATED OTHERWISE (XX = MODIFIER)	R	RELAY
XX	FLAME DETECTOR (XX = TYPE)	EOL	END OF LINE RESISTOR
WF	FIRE SPRINKLER WATERFLOW SWITCH	K	FIRE ALARM KEY REPOSITORY (KNOX BOX)
VS	FIRE SPRINKLER VALVE SUPERVISORY SWITCH (TAMPER SWITCH)		MAGNETIC DOOR HOLDER
M	AREA OF REFUGE TWO-WAY COMMUNICATIONS SYSTEM MASTER STATION		FIRE FIGHTER'S PHONE
C	AREA OF REFUGE TWO-WAY COMMUNICATIONS SYSTEM CALL STATION	J	FIRE ALARM SYSTEM JUNCTION BOX

FIRE ALARM ABBREVIATIONS AND MODIFIERS (SOME MAY NOT BE USED)		
GENERAL	HEAT DETECTORS	NOTIFICATION APPLIANCES
WP WEATHERPROOF	R RATE OF RISE	C CEILING MOUNTED
SMOKE DETECTORS	R/C RATE COMPENSATION	LF LOW-FREQUENCY (520 HZ)
AC ABOVE CEILING	R/F COMBINATION FIXED TEMPERATURE AND RATE OF RISE	M MINI HORN
AS AIR SAMPLING		
BR BEAM RECEIVER	FLAME DETECTORS	
BT BEAM TRANSMITTER	IR INFRARED	
I IONIZATION	UV ULTRAVIOLET	
ID IN DUCT	UV/IR COMBINATION INFRARED AND ULTRAVIOLET	
SA SMOKE ALARM (120V WITH BATTERY)	VR VISIBLE RADIATION	

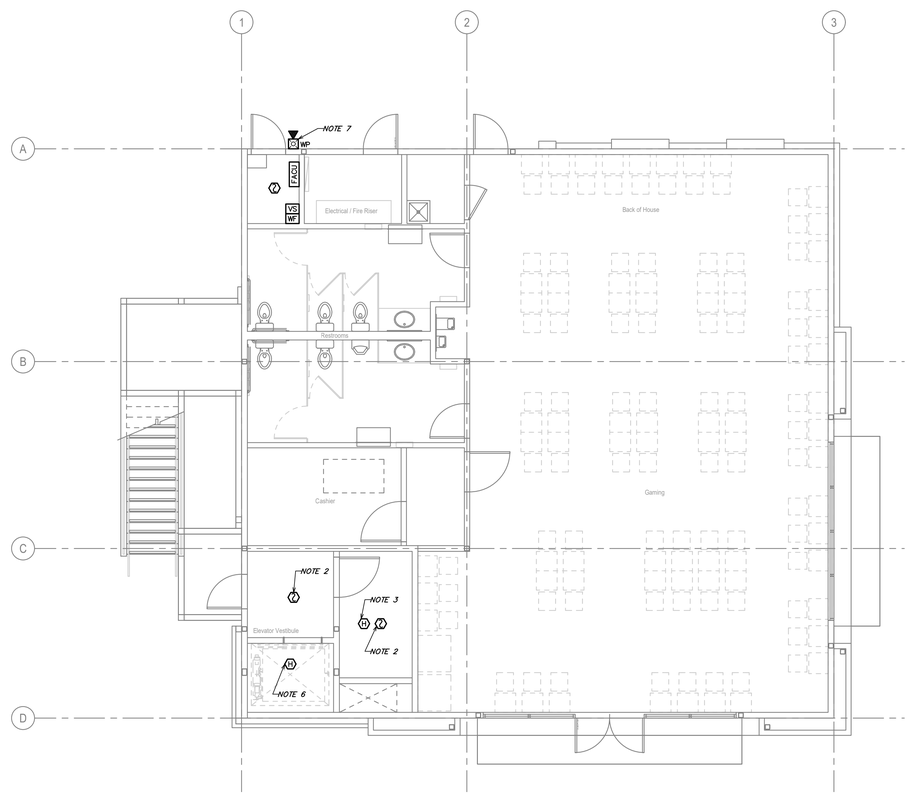

1 FIRE ALARM PLAN - FIRST FLOOR

NORTH

ktgy

17911 Von Karman Ave.
Suite 200
Irvine, CA 92614
ktgy.com
949.851.2133

ktgy Project Number

Contact	DORINA WATSON
Email	dwatson@ktgy.com
Senior Director	DAVID SCHMITZ
Designer	RUSSEL ROSALES

Developer
SEDC
23906 SOBOBA ROAD
SAN JACINTO, CA 92581

PHONE: (951) 663-2058

SOBOBA SOVOVATUM VILLAGE PHASE-2

SAN JACINTO, CA

No.	DATE	DESCRIPTION

Client is responsible for notifying architect in writing for any discovered errors or omissions in the plans and specifications during construction of the project. Failure for Client to notify Architect of any known errors or omissions in the plans or specifications, and proceeding with constructing the portion of work shown in the plans or specifications containing known errors or omissions shall be a waiver by Client for any liability of Architect for such known errors or omissions. Client releases Architect for any liability for such portions of work, and Architect shall not be liable for any delay damages, change orders, repair costs, removal or demolition costs, or replacement of any such portions of work.

2026-05-26, ISSUED FOR BID

Sheet Name
FIRE ALARM PLANS

Schnackel engineers
800-381-6963 www.schnackel.com

FA1-11

SE JOB#: 250720

COPYRIGHT 2024 KTGY GROUP INC. These plans and specifications are protected by United States copyright law and may not be used, reproduced, distributed, transmitted, displayed, or modified in any way without the prior written consent of KTGY Group, Inc. or the authorized copyright holder or licensee.

SECTION 280000 - FIRE ALARM GENERAL CONDITIONS

1.01 SUMMARY
A. This section supplements Section 284600 and shall apply to all phases of work hereinafter specified, shown on the drawings, or required to provide a complete installation of approved electrical, communications, and electronic safety and security systems.
B. All drawings and specifications, including drawings and specifications related to other divisions, apply to the work. Where conflicts arise between documents, the more stringent requirement will apply, subject to the interpretation of the Engineer.
C. Furnish all labor, material, services, and skilled supervision necessary for the construction, erection, installation, connections, testing, and adjustment of all equipment, materials, and components specified herein, or shown or noted on the drawings, and its delivery to the Owner, complete in all respects and ready for use.
D. Products furnished but not installed under this section:
1. Where plans indicate equipment, materials, or components will be furnished by this Contractor for installation by other Contractors, this Contractor shall furnish all such equipment, materials, or components, complete in all respects and ready for installation.
2. Drawings, instructions, and manuals supplied with equipment, materials, or components furnished under this division but installed under other divisions shall be carefully preserved and turned over to the installing Contractor.
E. Products installed but not furnished under this section:
1. Where plans indicate equipment, materials, or components will be furnished by others, this Contractor shall provide all rough-in and supplies and shall connect such equipment, materials, or components.
2. Drawings, instructions, and manuals supplied with equipment, materials, or components furnished under separate divisions but installed under this division shall be carefully preserved and turned over to the Owner in the closeout documents.

1.02 DEFINITIONS
A. The following definitions apply throughout the drawings and specifications associated with the work performed under Section 284600.
1. Authority Having Jurisdiction: All regulatory agencies, including but not limited to, plans examiners, fire marshals, inspectors, insurance carriers, and utility companies.
2. Concealed: Hidden from sight in chases, furred spaces, shafts, hung ceilings, embedded in construction, in crawl spaces, or underground.
3. Conduit: Conduit or tubing and all required fittings, pull boxes, hangers, and other supports and accessories related to such.
4. Code: All applicable codes, including but not limited to the administrative code, building code, electrical code, energy conservation code, existing building code, fire code, fuel gas code, mechanical code, plumbing code, and residential code.
5. Code, Administrative: The administrative code, including all local amendments and reference standards, adopted and enforced by the Authority Having Jurisdiction.
6. Code, Building: The building code, including all local amendments and reference standards, adopted and enforced by the Authority Having Jurisdiction.
7. Code, Electrical: The electrical code, including all local amendments and reference standards, adopted and enforced by the Authority Having Jurisdiction.
8. Code, Energy Conservation Code: The energy conservation code, including all local amendments and reference standards, adopted and enforced by the Authority Having Jurisdiction.
9. Code, Existing Building: The existing building code, including all local amendments and reference standards, adopted and enforced by the Authority Having Jurisdiction.
10. Code, Fire: The fire code, including all local amendments and reference standards, adopted and enforced by the Authority Having Jurisdiction.
11. Code, Fuel Gas: The fuel gas code, including all local amendments and reference standards, adopted and enforced by the Authority Having Jurisdiction.
12. Code, Mechanical: The mechanical code, including all local amendments and reference standards, adopted and enforced by the Authority Having Jurisdiction.
13. Code, Plumbing: The plumbing code, including all local amendments and reference standards, adopted and enforced by the Authority Having Jurisdiction.
14. Code, Residential: The residential code, including all local amendments and reference standards, adopted and enforced by the Authority Having Jurisdiction.
15. Connect: To bring service to the equipment and make final attachment including necessary switches, outlets, boxes, terminations, etc.
16. Contract Documents: All drawings, specifications, specified reference standards, applicable codes, manufacturer's installation instructions, and executed legal documents related to the project.
17. Contractor: The contractor(s) or subcontractor(s) responsible for performing the work associated with Section 284600, and ultimately the General Contractor.
18. Drawings: All plans, details, schedules, diagrams, sketches, etc. issued for the construction of the work.
19. Exposed: Not concealed.
20. Furnish: To supply and deliver, unload, and inspect for damage.
21. Install: To unpack, assemble, erect, apply, place, finish, cure, protect, clean, connect, and place into operation into the work.
22. Owner: The entity, including authorized representatives, to which the work is being provided.
23. Provide: To furnish and install.
24. Work: The construction and services, including all labor, materials, and equipment, required by the contract documents to fulfill the Contractor's obligations. The work may constitute the whole or a part of the project.

1.03 CODES AND STANDARDS
A. Perform work in accordance with code requirements.
B. Perform work in accordance with:
1. Occupational Safety and Health Administration (OSHA) Regulations.
2. Americans with Disabilities Act (ADA).
3. The Authority Having Jurisdiction (AHJ).
4. All applicable NECA standards.
5. Manufacturer's instructions.
6. Instructions associated with the component's listing agency's requirements.
7. Landlord requirements including Tenant Criteria Manuals and Lease Exhibits.
C. All Referenced Standards identified in the specifications apply to the work as if they were incorporated into the specifications in their entirety. It shall not be necessary to specifically reference one of these Referenced Standards for the requirements of the Referenced Standards to apply to the work. If there is a conflict between the requirements of a Referenced Standard and the drawings or specifications, it is the responsibility of this Contractor to notify the Engineer of the discrepancy and obtain direction as to which standard applies prior to proceeding.
D. Code and Landlord requirements supersede any requirements of the contract documents.
E. The contract documents take precedence where the contract documents exceed code, Landlord, or referenced standards requirements.

1.04 PERMITS AND FEES
A. Permits, licenses, fees, inspections and arrangements required for the work shall be obtained by the Contractor at his expense.

1.05 PREPARATION
A. The Contractor is responsible to obtain, fully understand, and coordinate the work with the complete set of contract documents. Any required corrections, including all associated costs, arising from issues caused by the Contractor's failure to understand and/or coordinate the work with the complete set of contract documents are the Contractor's sole responsibility.
B. Work under these sections is diagrammatic and is intended to convey the scope of work and indicate the general arrangement of equipment, conduit, and outlets. Obtain instructions from the Architect/Engineer prior to rough-in wherever a question exists as to the exact intended location of outlets or equipment.
C. Promptly report any discrepancies discovered within the contract documents. Failure of the Contractor to report discrepancies shall result in the resolution becoming the Contractor's responsibility and subject to the Architect/Engineer's review and possible rejection. Should the Architect/Engineer reject a discrepancy resolution of which they were not notified, the Contractor is fully responsible to correct the installation, including all associated costs, until approval of the installation is given by the Architect/Engineer.

1.06 EXISTING CONDITIONS
A. Verify all existing conditions prior to beginning work.
B. Any existing conditions indicated are based on information provided by others and possible limited field verification.
C. Visit the project site, review existing conditions against the contract documents, and become familiar with the work prior to bidding and start of the work.
1. Adjust for actual field conditions at no additional expense to the Owner.
2. If major discrepancies are found, the Contractor shall advise the Architect/Engineer of such deviations in writing so that the appropriate modifications to the design can be made without delay to the project.
a. The Contractor assumes full responsibility of adjusting for discrepancies of which the Architect/Engineer is not informed.
3. Signing the contract is an acknowledgement that the site visit has been completed and the existing conditions are accepted.
D. Verify field measurements and circuiting arrangements are as indicated.
E. Verify that removed wiring and equipment serve only abandoned facilities.
F. Where connections are made between new work and existing work, the connections shall be made by using materials and methods to suit the actual conditions.
G. Where existing work is to be modified, it shall be done in conformance with these specifications. Materials used shall be same as existing except where specified otherwise.

1.07 SUBMITTALS
A. Furnish the Architect/Engineer product data and/or shop drawings, as specified.
B. Indicate all proposed catalog numbers. Product data and/or shop drawings submitted without catalog numbers will be returned without Engineer review.
C. Product data shall consist of manufacturer's standard catalog pages and/or cut-sheets.
D. Submittals shall be concise and to the point, demonstrating the key performance parameters indicated in the contract documents, major dimensions, and identifying the materials used to manufacture the products. Submittals shall directly address the specific requirements of the contract documents without unnecessary, superfluous information such as non-applicable catalog pages, non-applicable cut sheets, and/or sales brochures. Submittals that are deemed overly voluminous and/or non-specific to the requirements of the contract documents will be returned without Engineer review.
E. The Architect/Engineer's review shall not relieve the Contractor from responsibility for errors within the submittals.

1.08 QUALITY ASSURANCE
A. All Products:
1. Listed, classified, and labeled by an organization recognized by OSHA as a Nationally Recognized Testing Laboratory (NRTL) and acceptable to Authority Having Jurisdiction as suitable for the purpose specified and indicated.
2. Listed and classified by the local Department of Buildings and furnished with an acceptance number, where applicable.
3. Listed and classified by the Landlord's and/or Owner's insurance carrier (FM, IRI, etc.), where applicable.
B. All equipment, materials, and components shall be free of all rust/corrosion or any visible damage. All items not complying with this requirement shall be replaced at no additional cost to the Owner.
C. Unless otherwise indicated, all equipment, materials, and components of the same type or classification and used for the same purpose shall be products of the same manufacturer.
D. Use only new, un-weathered, and unused equipment, materials, and components, unless indicated otherwise.

PART 2 PRODUCTS - NOT USED

PART 3 EXECUTION

3.01 COORDINATION OF WORK
A. Examine the contract documents as a whole for the work of other trades and coordinate all work accordingly.
B. Work lines and established heights shall be in strict accordance with the contract documents. Verify all dimensions shown and establish all elevations and detailed dimensions not shown.
C. Promptly report to the Architect/Engineer any delay or difficulties encountered in the installation of the work which might prevent prompt and proper installation or make it unsuitable to connect with or receive the work of others. Failure to so report shall constitute an acceptance of the work of other trades as being fit and proper for the execution of this work.
D. Plan, lay out, and coordinate the work with all trades well enough in advance so that it proceeds with a minimum of interference to work that has not been completed and work that is in progress.
1. Inform all trades of openings required for the work and provide all special frames, sleeves, and anchor bolts required.
2. Perform all work in compliance with the contract documents and afford other trades reasonable opportunity for the execution of their work.
3. Properly connect and coordinate this work with the work of other trades at such time and in such a manner as not to delay or interfere with their work.
4. Conflicts arising from lack of coordination shall be the Contractor's responsibility.
5. The Contractor shall pay for all extra cutting and patching made necessary by his failure to properly direct such work at the correct time.
E. Install equipment, materials, and components to provide for maximum headroom. Maintain access to equipment requiring service when selecting mounting elevations.
F. Install equipment to facilitate servicing, maintenance, and repair or replacement of equipment components. As much as practical, connect equipment for ease of disconnecting, with minimum of interference with other installations.
G. Install equipment, materials, and components level and plumb, parallel and perpendicular to building lines when exposed to view, unless otherwise indicated.
H. Verify and coordinate all requirements and installation details of all equipment, materials, and components that are to be furnished by other trades and installed or connected by the Contractor prior to rough-in. Conflicts arising from lack of coordination shall be the Contractor's responsibility. As such, the Contractor is responsible to:
1. Obtain and review shop drawings, product data, manufacturer's wiring diagrams, and manufacturer's instructions for equipment, materials, and components furnished under other sections.
2. Determine connection locations and requirements.
3. Sequence rough-in of connections to coordinate with installation of equipment.
4. Sequence connections to coordinate with start-up of equipment.
I. Where crane rental or other erection is required, such costs shall be included in the Subcontractor's contract, unless specific arrangements are made with the General Contractor to cover these costs.

3.02 INTERFACES
A. Fire and Smoke Rated Assemblies:
1. The Contractor shall familiarize himself with all fire and smoke rated construction and install his work so as to maintain the integrity of the fire and smoke rating.
2. Install all equipment, materials, and components to preserve fire resistance rating of partitions and other elements, using materials and methods specified.
3. Seal annular space around conduits.
4. Use UL listed material that maintains fire rated wall and floor integrity.

3.03 FIELD QUALITY CONTROL
A. Explicitly follow manufacturer's instruction sheets for the installation of all equipment, materials, and components. Where manufacturer's instruction sheets conflict with requirements of the drawings or specifications, such conflicts shall be brought to the attention of the Architect/Engineer for clarification.
B. Although all such work is not specifically indicated, provide all supplementary or miscellaneous items, appurtenances and devices incidental to or necessary for a sound, secure and complete installation.
C. Provide tests as necessary to establish the adequacy, quality, safety, completed status, and suitable operation of each system.
D. Seal equipment, materials, and components exposed to the weather and make weather-tight and insect-proof.
E. Surface Preparation:
1. Prepare all conduit, fittings, supports, and equipment enclosures exposed to the weather for painting by removing therefrom all oil, grease and dirt. Employ the necessary precautionary methods to prevent scratching or defacing of all apparatus and equipment.
2. Provide hot dip galvanized components for ferrous materials exposed to the weather. Provide a minimum of one coat of rust inhibiting primer paint for all materials after fabrication, color as selected by the Architect.
3. Degrease and clean all surfaces of equipment, materials, and components that are to be painted or are to receive nameplates or labels.
F. All equipment, materials, and components located on exterior walls or on the roof where exposed to view from the ground shall be finish painted to match the surrounding surfaces. Paint colors shall be as selected by the Architect. The above provisions shall apply to all exposed equipment and materials visible from 6'-0" above grade from any property line. The Architect may, at his sole option, elect to not paint any item deemed acceptable in appearance.
G. All equipment, materials, and components shall be connected providing circuit continuity in accordance with applicable codes whether or not each component is shown between such items and the point of circuit origin.

3.04 ACCESS TO EQUIPMENT
A. Install all equipment and boxes so that all parts are easily accessible for inspection, operation, maintenance and repair. If concealed, provide access doors. Provide fire rated access doors where required by the fire resistance rating of the wall or ceiling in which the door is installed.

3.05 EQUIPMENT CLEARANCES
A. Working Spaces: Install all equipment which is likely to require examination, adjustment, servicing, or maintenance, such that all working spaces required by NFPA 70 are maintained.

3.06 CUTTING, PATCHING, AND PIERCING
A. Cutting of openings and installation of sleeves or frames through walls and surfaces shall be done in a neat workmanlike manner. Openings shall be cut only as large as required for the installation; sleeves and/or frames installed flush with finished surfaces and grouted in place. Surfaces around openings shall be left smooth and finished to match surrounding surface.
B. Obtain written permission of the Architect/Engineer before cutting or piercing structural members. Use craftsmen skilled in their respective trades for cutting, fitting, repairing, patching of plaster, and finishing of materials including carpentry work, metal work, or concrete work required for this work.
C. Do not weaken walls, partitions, or floors with cutting. Holes required to be cut in floors must be drilled without breaking out around the holes. The Architect/Engineer will determine suitability of patching and/or refinishing requirements.
D. Patch all openings resulting from the installation or removal of equipment, materials, and components.
E. Provide and maintain temporary partitions or dust barriers adequate to prevent the spread of dust and dirt to adjacent areas.
F. Patch existing finished surfaces and building components using new materials matching existing materials and experienced subcontractors.

END OF SECTION

SECTION 284600 - FIRE ALARM SYSTEMS

PART 1 GENERAL

1.01 COORDINATION
A. Coordinate with the architectural plans to determine occupancy classification, occupant loads, and fire-rated and smoke-rated construction locations and ratings.
B. Coordinate locations of all smoke curtains, smoke shutters, fire curtains, fire shutters, magnetic door hold-opens, etc. with the architectural plans. Include all costs in the bid.
C. Coordinate locations of all required duct smoke detectors, including duct smoke detectors which are required to control smoke dampers, with the Mechanical Contractor. Include all costs in the bid.
D. Coordinate division of responsibility of duct smoke detector installation and all wiring with both the Electrical and Mechanical Contractors. Include all costs in the bid.
E. Coordinate locations of all fire suppression system monitoring components including flow switches, valve supervisory switches, pressure switches, corrosion monitoring systems, fire pumps, etc. with the Fire Sprinkler Contractor. Include all costs in the bid.
F. Coordinate all required elevator interface controls with the Elevator Contractor. Include all costs in the bid.
G. Coordinate all required access control system interface controls with the Security Contractor. Include all costs in the bid.
H. Coordinate with the Electrical Contractor to provide 120 VAC circuits for equipment at required locations and any raceways required for fire alarm circuitry. Include all costs in the bid.
I. Coordinate with the Contractor(s) responsible for all other systems that may require fire alarm interfaces. Include all costs in the bid.
J. Coordinate the locations of all wall-mounted notification appliances with the architectural plans to ensure notification appliances do not conflict with architectural features.
1. Obtain the Architect's approval of all wall-mounted notification appliance locations.
K. Change orders resulting from a lack of coordination will not be considered.

1.02 SYSTEM DESIGN
A. Prepare shop drawings (installation documents) complying with NFPA 72 section 7.4 based on the manufacturer-specific equipment and components intended to be installed.
B. Information on the drawings serves as design (layout) documentation per NFPA 72 section 7.3 for the purpose of bidding, establishing performance criteria, conveying intent, and preliminary permit approval. As such, the drawings may not show every component required for a complete installation. The Contractor shall include all components required for a complete, code-compliant design and installation in the shop drawings (installation documents).
C. Submit shop drawings (installation documents) to the Authority Having Jurisdiction for review and approval.
D. Include all costs associated with the development of the shop drawings (installation documents) and all permit fees in the bid.
E. Coordinate with all associated disciplines/trades noted above to ensure a coordinated design.
F. Ensure voice intelligibility per NFPA 72 requirements.

1.03 PREINSTALLATION MEETINGS
A. Conduct meeting with the Electrical Contractor to determine rough-in locations for all equipment and devices, raceway and wire/cable requirements, and locations where 120 VAC circuits will be required.
B. Conduct meeting with the Mechanical Contractor to determine required mechanical system interfaces and sequences of operation.
C. Conduct meeting with the Fire Sprinkler Contractor to determine required fire sprinkler system interfaces and sequences of operation.
D. Conduct meeting with the Elevator Contractor to determine required elevator system interfaces and sequences of operation.
E. Conduct meeting with the Security Contractor to determine required access control interfaces and sequences of operation.
F. Conduct meeting(s) with any other Contractors to determine required interfaces and sequences of operation for other systems that require fire alarm interfaces.

1.04 SUBMITTALS
A. Provide the following for Architect/Engineer review, after obtaining approval from the Authority Having Jurisdiction:
1. Shop Drawings (Installation Documents): Submit all information required by the Authority Having Jurisdiction for plan review and permitting, including circuited floor plans, riser diagrams which correspond to the circuiting indicated on the floor plans, input/output matrix, battery calculations, notification appliance circuit voltage drop calculations, and manufacturer's detailed data sheet for each component.
2. Record of approval by the Authority Having Jurisdiction.
B. Submittals are reviewed only for general compliance with the contract documents. Dimensions, quantities, and details are not reviewed during submittal review. Review of the submittals does not relieve the Contractor of the responsibility for providing all materials, equipment, and accessories necessary for a complete and operational system meeting the requirements of the project and the intent of the contract documents. The responsibility for coordination of substituted materials and equipment lies solely with the substituting Contractor.

1.05 QUALITY ASSURANCE
A. Designer Qualifications: Experience designing fire alarm systems within the Authority Having Jurisdiction's area and be a NICET level III or IV (3 or 4) certified fire alarm technician, a registered professional fire protection or electrical engineer, an employee of the fire alarm control unit manufacturer, or a licensed fire alarm contractor.
B. Code requirements supersede any requirements of this section.
C. Equipment performance and accessories shall be as indicated on the drawings and specified herein. Inclusion in both locations is not a requisite to inclusion in the contract; equipment and accessories indicated in either location shall be included in the contract. Provide all necessary accessories and connections as required for a complete, functional system, including all required components reasonably inferred to as necessary although such components may or may not be specifically indicated in the contract documents.

1.06 WARRANTY
A. Provide control panel manufacturer's warranty that system components other than wire and conduit are free from defects and will remain so for 1 year after date of Substantial Completion.
B. Provide installer's warranty that the installation is free from defects and will remain so for 1 year after date of Substantial Completion.

PART 2 PRODUCTS

2.01 FIRE ALARM SYSTEM
A. Provide all components and programming required for a complete, operational, code-compliant system, whether or not indicated in contract documents.
B. Comply with the following; where requirements conflict, the most stringent requirement shall apply:
1. ADA Standards.
2. The requirements of the Fire Marshal.
3. The requirements of the local Authority Having Jurisdiction.
4. Applicable local codes.
5. NFPA 72; consider any provision where the word "should" is used to be a mandatory requirement.
6. The contract documents.
C. Means of Transmission to Remote Supervising Station: Digital alarm communicator transmitter (DACT), 2 telephone lines.
1. Cellular and/or internet protocol (IP) transmitters are permitted if accepted by the Authority Having Jurisdiction.
2. Notification method and code signal per local requirements. Coordinate requirements with remote supervising station vendor.
D. Circuits:
1. Survivability of All Circuit Pathways: Level 0 unless indicated otherwise or otherwise required by the Authority Having Jurisdiction.
2. Initiating Device Circuits (IDC): Class B unless otherwise required to achieve required survivability or otherwise required by the Authority Having Jurisdiction.
3. Signaling Line Circuits (SLC) Within Single Building: Class B unless otherwise required to achieve required survivability or otherwise required by the Authority Having Jurisdiction.
4. Signaling Line Circuits (SLC) Between Buildings: Class A unless otherwise required to achieve required survivability or otherwise required by the Authority Having Jurisdiction.
5. Notification Appliance Circuits (NAC): Class B unless otherwise required to achieve required survivability or otherwise required by the Authority Having Jurisdiction.
6. Smoke Control Circuits: Class C unless otherwise required to achieve required survivability or otherwise required by the Authority Having Jurisdiction.
7. Releasing Device Circuits: Class D unless otherwise required to achieve required survivability or otherwise required by the Authority Having Jurisdiction.
8. Fire Alarm Network Communication Cabling: Class X unless otherwise required to achieve required survivability or otherwise required by the Authority Having Jurisdiction.
E. Spare Capacity:
1. Initiating Device Circuits: Minimum 25 percent spare capacity.
2. Notification Appliance Circuits: Minimum 25 percent spare capacity.
3. Speaker Amplifiers: Minimum 25 percent spare capacity.
4. Fire Alarm Control Units: Capable of handling all circuits utilized to capacity without requiring additional components other than plug-in control modules.
5. Auxiliary Power Supplies: Minimum 25 percent spare capacity.
F. Power Sources:
1. Primary: Dedicated branch circuits of the facility power distribution system.
2. Secondary: Storage batteries.
3. Capacity: Sufficient to operate entire system for period specified by NFPA 72 plus 25 percent spare capacity.
G. Interlocking with Existing Fire Alarm Control Units: Interlock all new fire alarm control units with the existing main fire alarm control unit such that all alarm, supervisory, and trouble signals reported at any new fire alarm control units are transmitted to and annunciated at the existing fire alarm control unit.

2.02 EXISTING COMPONENTS
A. Existing Fire Alarm System: Remove existing components as required for the new work and incorporate remaining components into new system, under warranty as if they were new; do not take existing portions of system out of service until new portions are fully operational, tested, and connected to existing system.
B. Provide all necessary panel, expansion card, power supply and annunciator updates required to support the new system.
C. Coordinate new notification appliances with the existing notification appliances.
1. Match finish color with existing notification appliances located within the same area.
2. New Audible Notification Appliances: Match existing tones and sound pressure characteristics, provided those tones and sound pressure characteristics comply with current codes.
3. New Visual Notification Appliances: Match existing type and synchronize with the existing visual devices.

2.03 FIRE SAFETY SYSTEMS INTERFACES
A. Supervision: Provide supervisory signals in accordance with NFPA 72 and local requirements of the Authority Having Jurisdiction, including but not necessarily limited to each of the following, when present:
1. Fire suppression system control valves, pressure switches, and corrosion monitoring probes per NFPA 13, 13R, and 72.
2. Dry-pipe fire suppression system pressure.
3. Fire pump(s).
4. Elevator shut-down control circuits.
5. Duct smoke detectors unless Authority Having Jurisdiction requires duct smoke detectors to provide an alarm signal.
B. Alarm: Provide alarm initiation in accordance with NFPA 72 and local requirements of the Authority Having Jurisdiction, including but not necessarily limited to each of the following, when present:
1. Fire suppression system flow.
2. Kitchen hood suppression activation.
3. Elevator lobby, elevator hoistway, and elevator machine room, machine space, control room, and control space smoke detectors.
4. Duct smoke detectors when Authority Having Jurisdiction will not permit duct smoke detectors to provide a supervisory signal.
C. Elevators: Provide elevator interfaces in accordance with code and local requirements of the Authority Having Jurisdiction, including but not necessarily limited to each of the following, when present:
1. Smoke Detectors Located in Elevator Lobbies, Hoistways, Machine Rooms, Machine Spaces, Control Rooms, and Control Spaces: Initiate fire fighters' service Phase I Emergency Recall Operation.
2. Heat Detectors Located in Hoistways, Pits, Machine Rooms, Machine Spaces, Control Rooms, and Control Spaces: Shut down elevator main line power prior to sprinkler activation, except for fire service access elevators (FSAEs) and occupant evacuation elevators (OEEs).
D. Carbon Monoxide Detectors: Shut down fuel source to carbon monoxide-producing equipment when required by local codes or the Authority Having Jurisdiction.
E. Heating, Ventilation, and Air-Conditioning (HVAC) Systems: Provide HVAC system interfaces in accordance with code and local requirements of the Authority Having Jurisdiction, including but not necessarily limited to each of the following, when present:
1. Duct Smoke Detectors:
a. Close smoke damper(s).
b. Shut down supply fan of associated HVAC equipment when individual equipment is rated equal to or greater than 2,000 cubic feet per minute (0.9 cubic meters per second).
c. Shut down supply fans of all associated HVAC equipment serving an area when total aggregate capacity serving the area is equal to or greater than 2,000 cubic feet per minute (0.9 cubic meters per second).
d. Shut down supply fans of all HVAC equipment which shares a common return air plenum when the total circulation is equal to or greater than 2,000 cubic feet per minute (0.9 cubic meters per second).
2. High Volume, Low Speed (HVLS) Ceiling Fans: Shut down all HVLS ceiling fans measuring 6 feet (1.8 m) or greater in diameter upon a fire suppression system water flow alarm.
F. Kitchen Hood Fire Suppression Systems:
1. Disconnect power to all appliances located under hood.
2. Close gas valve(s) serving appliances located under hood.
3. Shut down all supply air fan(s).
4. Start hood exhaust fan(s) if not already running.
G. Music Systems: Shut down music systems upon activation of audible notification appliances.
H. Doors:
1. Magnetic Door Holders: Release upon activation of smoke detectors in smoke zone on either side of door, upon alarm from manual pull station on same floor, and upon sprinkler activation on same floor.
2. Electromagnetic Door Locks on Egress Doors: Unlock upon activation of any alarm initiating device or suppression system in smoke zone that doors serve as egress from.
I. Smoke and Fire Curtains and Shutters: Release upon activation of smoke detectors in smoke zone on either side of door, upon alarm from manual pull station on same floor, and upon sprinkler activation on same floor.

2.04 COMPONENTS
A. General:
1. Provide flush mounted units where installed in finished areas; in unfinished areas, surface mounted unit are acceptable.
2. Provide legible, permanent labels for each control device using identifiers used in control unit programming.
B. Fire Alarm Control Units:
1. General Requirements:
a. UL 864 microprocessor based control unit capable of monitoring, communicating with, and controlling all required initiating devices, notification appliances, and addressable modules required to accomplish the required fire safety systems interfaces.
b. Two, minimum, configurable on-board notification appliance circuits.
c. History buffer, 1800 event, minimum, with dedicated 600 event alarm event buffer.
2. Central Microprocessor:
a. Communicate, control, and monitor all external devices.
b. Custom operating parameters for the system stored in non-volatile memory to prevent loss during power outages.
c. Equipped with real-time clock to denote actual time of occurrence of system events for the display, history buffers, and external reporting devices.
3. Display:
a. Fifty character, minimum, LCD display to annunciate system conditions and program system operating parameters.
b. Eight status LEDs: AC Power, Fire Alarm, Pre-Alarm Warning, Supervisory, Trouble, Alarm Silence, Supervisory Silence, and Trouble Silence.
4. Keypad:
a. All keys provided with tactile operational feedback.
b. Minimum of 12 alpha-numeric keys, four (4) cursor keys, and ENTER key.
c. Separate keys dedicated to System Reset, Step, Alarm Silence, Acknowledge, and Drill.
d. Used to provide all control and programming functions for the system.
5. Signaling Line Circuits (SLC):
a. Provide power and communication with up to 127, minimum, analog or addressable devices on each SLC.
b. Polling scheme interrupted by a device in alarm.
c. Address of alarming device annunciated at the control system display.
6. Enclosures:
a. Flush-mounted in finished or public areas, surface mounted in unfinished areas.
b. Finish:
1. Corrosion protective, hardened finish.
2. Red when installed in unfinished areas, gray or beige when installed in finished or public areas.
7. Power Supplies:
a. Primary Power: 120 VAC, 60 Hertz.
b. Secondary Power: Storage battery and battery charger capable of operating entire system for period of time specified by NFPA 72 plus 25 percent spare capacity.
c. Provide a minimum of 5.0 amps at 24 VDC for use on notification appliance circuits or auxiliary power circuits.
d. Provide auxiliary power supplies where required to meet the requirements of the system design.
e. Provide battery charger capacity to sufficiently recharge a depleted set of batteries within 48 hours.
f. Provide auxiliary power output circuits for four wire detectors or addressable control modules.
g. Provide separate circuit to allow resetting the auxiliary power during a system reset.
h. All auxiliary power circuits shall be power limited.
8. Remote Station Signal Transmitter: Electrically supervised digital alarm communicator transmitter, capable of transmitting alarm and trouble signals over telephone lines to central station receiver.
a. Cellular and/or internet protocol (IP) transmitters are permitted if accepted by the Authority Having Jurisdiction.
C. Voice/Alarm Control Units: UL 864 microprocessor based control unit capable of distributing and controlling emergency voice messages to all associated speakers with the following minimum features:
1. Capability to interface with Local Operator Console (LOC), distributed audio amplifiers, remote paging units, remote microphones, and fire fighters' telephone units.
2. Expandable integral audio amplifier.
3. Integral digital message generator capable of producing fourteen unique messages, up to 60 seconds per message.
4. Custom message recording capability using the local microphone, USB port, or external audio input.
5. Integral tone generator with field-selectable leading and trailing tones.
6. Field-selectable repeat cycles.
7. Integral supervised microphone.
8. Push Button Controls for All Call, System Control, Speaker Zone Select, Message Select, Diagnostic Select, and Lamp Test.
9. Color-coded system status LEDs to indicate Fire System Active, System Control, System In Use, Speaker Zone Active, Speaker Zone Fault, OK to Page, Microphone Trouble, Message Active, Remote Amplifier Fault, Main Console Fault, AC Power, Ground Fault, Charger Fault, Battery Fault, Data Bus Fault, NAC Fault, NAC Active, System Trouble, and Audio Riser Fault.
10. One on-board notification appliance circuit (NAC).
11. Primary Power: 120 VAC, 60 Hertz.
12. Secondary Power: Storage battery and battery charger capable of operating entire system for period of time specified by NFPA 72 plus 25 percent spare capacity.
13. Audio Amplifier Modules: As required for speakers served.
D. Remote Annunciators:
1. Remote annunciator including audible and visual indication of fire alarm by zone, and audible and visual indication of system trouble.
2. Compatible with the control unit; coordinate finish color with the Architect.
3. Provide at a location approved by the Authority Having Jurisdiction when indicated on the drawings or when control unit is installed at a location other than the First Responder's primary point of entry.
E. Addressable Modules:
1. Provide addressable modules suitable for connection to fire alarm control unit signaling line circuits.
2. Use addressable modules only in clean, dry, indoor, nonhazardous locations.
3. Monitor Modules: Unless devices are explicitly permitted to be connected together as zone, provide separate addressable monitor module for each conventional dry-contact input device in order to be individually identifiable by addressable fire alarm control unit.
4. Control Modules: Provide as indicated or as required for selective control of notification appliances.
5. Releasing Control Modules: Provide as indicated or as required for control of listed solenoids in releasing applications.
6. Relay Modules: Provide as indicated or as required to perform necessary functions via dry-contact interface. Where load exceeds module contact rating, provide accessory power isolation relays suitable for load as required.
7. Signaling Line Circuit (SLC) Isolating Modules: Provide as required to automatically isolate short circuits on connected sections of SLC loops and allow other sections to continue to function normally. Provide automatic reset upon correction of short circuit.
F. Initiating Devices:
1. General: All initiating devices shall be compliant with NFPA 72 requirements.
2. Manual Stations: Dual-action; semi-flush mounted in all finished areas and surface mounted with appropriate backbox in unfinished areas.
3. Spot Heat Detectors: Combination rate-of-rise and fixed temperature, rated 135 degrees F (57 degrees C) and temperature rate of rise of 15 degrees F (8.3 degrees C), with appropriate mounting base suitable for installation on 4-inch (100 mm) outlet box.
a. Provide relay base when heat detector is used to activate a shunt trip.
4. Spot Smoke Detectors: Low-profile photoelectric smoke detector with adjustable sensitivity, unless indicated otherwise, with appropriate mounting base suitable for installation on 4-inch (100 mm) outlet box.
a. Provide ionization type smoke detector when located in areas that are subject to steam build-up.
b. Provide relay base when smoke detector is used for releasing service.
c. Provide low frequency sounder bases for smoke detectors installed within sleeping units.
5. Duct Smoke Detectors:
a. General:
1. Provide for each HVAC unit rated equal to or greater than 2,000 cubic feet per minute (0.9 cubic meters per second).
2. Provide for all HVAC units serving the same room or area where the total aggregate capacity of the units is equal to or greater than 2,000 cubic feet per minute (0.9 cubic meters per second).
3. Provide for all HVAC units that share a common return air plenum where the total aggregate capacity of the units is equal to or greater than 2,000 cubic feet per minute (0.9 cubic meters per second).
4. Provide as required for control of each smoke damper.
5. All other locations required by code or the Authority Having Jurisdiction.
b. Detector: Photoelectric smoke detector suitable for duct air velocities from 100 to 4,000 feet per minute (0.5 to 20.32 meters per second) with visual indication of detector activation and capabilities for remote testing.
c. Housing: As required for the duct smoke detector.
d. Sampling Tube: As required for the duct.
e. Remote Test Stations: Keyed remote test station with green POWER and red ALARM status indicators. Provide for each duct smoke detector.
f. Multi-Signaling Accessories: Keyed remote test station with audible alarm signal, add-on strobe, green POWER status indicator, and red ALARM status indicator unless indicated otherwise. Provide for each duct smoke detector that is not connected to a fire alarm control unit.
6. Carbon Monoxide Detectors:
a. UL 2075 carbon monoxide detector with appropriate mounting base suitable for installation on 4-inch (100 mm) outlet box.
1. Provide with integral sounder base when required by local code or the Authority Having Jurisdiction.
b. Sensitivity: Per UL 2034 requirements.
G. Notification Appliances:
1. General:
a. All notification appliances shall be compliant with NFPA 72 requirements.
b. All notification appliances shall be from the same manufacturer.
c. All notification appliances shall be semi-flush mounted in all finished areas; notification appliances are permitted to be surface mounted in unfinished areas.
d. All notification appliances installed within damp or wet locations shall be weatherproof.
e. Color: As selected by the Architect.
2. Strobes:
a. Description: Flash tube with clear lens and reflector, suitable for ceiling or wall-mounting as indicated on the drawings, and field-selectable candela settings.
b. Provide strobe synchronization modules when more than one strobe is located within a viewing area.
3. Horns: Rated at 88 dBA at 16 volts, suitable for ceiling or wall-mounting as indicated on the drawings, field-selectable horn tones, and field-selectable volume settings.
4. Combination Horn/Strobes: An integrated appliance consisting of a horn unit and strobe unit meeting the specified individual requirements of both horns and strobes.
5. Speakers: Frequency range from 400 Hz to 4.0 kHz, high-fidelity, high-volume, field-selectable speaker voltage, and field-selectable power settings.
6. Combination Speaker/Strobes: An integrated appliance consisting of a horn unit and strobe unit meeting the specified individual requirements of both horns and strobes.
7. Wireguards: Provide for notification appliances located in gymnasiums and where otherwise subject to physical damage.
H. Auxiliary Devices:
1. Door Holders: 24 volt coil and 40 pounds of holding force unless indicated otherwise; coordinate selection of door holders with architectural hardware requirements and verify required clearances, sizes, and locations to operate properly with the doors and hardware specified.
2. Notification Appliance Circuit Power Supplies: As required for a complete operational system.
3. End-of-Line Resistors: As recommended by the manufacturer.
I. Non-System Alarm Devices:
1. Smoke Alarms: UL 217 dual-sensor (photoelectric and ionization) smoke alarm with audible and visual alarm indicators, integral test switch, low battery alarm; 120 VAC hardwired with 10-year Lithium ion battery backup; capable of stand-alone operation (single station) or interlocked with other smoke alarms (multiple station).
2. Carbon Monoxide Alarms: UL 2034 electromechanical type with green power LED, red alarm LED, audible alarm indicator, integral test switch, low battery alarm, and end-of-life alarm; 120 VAC hardwired with 10-year Lithium ion battery backup; capable of stand-alone operation (single station) or interlocked with other carbon monoxide alarms (multiple station).
3. Combination Smoke/Carbon Monoxide Alarms: An integrated appliance consisting of a smoke alarm and carbon monoxide alarm meeting the specified individual requirements of both smoke alarms and carbon monoxide alarms.
J. Conduit: Electrical metallic tubing (EMT); painted red.
K. Boxes: NEMA OS 1 sheet-steel boxes; 4 inch square by 1-1/2 inch deep or as otherwise required for the component; painted red.
L. Wire and Cable:
1. Where permitted by local codes and the Authority Having Jurisdiction, fire alarm system wiring is permitted to be installed without conduit where accessible and not subject to physical damage.
a. All wiring installed in exposed or inaccessible locations shall be installed in conduit, including wiring installed inside walls.
2. Riser Cabling: Unshielded Type FPLR when installed in conduit and Type FPLP when not installed in conduit unless indicated otherwise or otherwise required; red jacket.
3. Horizontal Cabling: Unshielded Type FPL when installed in conduit and Type FPLP when not installed in conduit unless indicated otherwise or otherwise required; red jacket.
4. Number and size of conductors shall be as recommended by the manufacturer, but shall be not less than 18 AWG for initiating device and signaling line circuits, and 14 AWG for notification appliance circuits.
M. Surge Protection: In accordance with IEEE C62.41.2 category B combination waveform and NFPA 70.
1. Equipment Connected to Alternating Current Circuits: Maximum let through voltage of 350 VAC, line-to-neutral, and 350 VAC, line-to-line; do not use fuses.
2. Initiating Device Circuits, Notification Appliance Circuits, and Communications Circuits: Provide surge protection at each point where circuit exits or enters a building; rated to protect applicable equipment; for 24 VDC maximum dc clamping voltage of 36 VDC, line-to-ground, and 72 VDC, line-to-line.
3. Signaling Line Circuits: Provide surge protection at each point where circuit exits or enters a building, rated to protect applicable equipment.
N. Document Holder: Steel 14 inch (350 mm) wide by 14 inch (350 mm) high by 3 inch (75 mm) deep system document box with red baked enamel finish.

2.05 SEQUENCE OF OPERATION
A. Trouble Mode: System or circuit trouble places system in trouble mode, which causes the following system operations:
1. Visual and audible trouble signal indicated at fire alarm control unit.
2. Visual and audible trouble signal indicated at remote annunciator panel.
3. Trouble signal transmitted to remote supervising station.
4. Manual acknowledge function at fire alarm control panel silences audible trouble alarm; visual alarm is displayed until initiating failure or circuit trouble is cleared.
B. Supervisory Alarm Mode: Supervisory signal places system in supervisory alarm mode, which causes the following system operations:
1. Visual and audible supervisory signal indicated at fire alarm control unit.
2. Visual and audible supervisory signal indicated at remote annunciator panel.
3. Supervisory signal transmitted to remote supervising station.
C. Alarm Mode: Actuation of initiation device places circuit in alarm mode, which causes the following system operations:
1. Visual and audible alarm signal indicated at fire alarm control unit.
2. Visual and audible alarm signal indicated at remote annunciator panel.
3. Alarm signal transmitted to remote supervising station.
4. Activate visual notification appliances.
5. Activate audible notification appliances.
6. Transmit signal to building mechanical systems to initiate supply air fan shut down.
7. Transmit signal to high volume, low speed (HVLS) ceiling fans to initiate shut down.
8. Transmit signal to building mechanical systems to close smoke damper(s).
9. Transmit signal to start grease hood exhaust fan(s).
10. Transmit signal to elevator controllers to initiate fire fighters' service Phase I Emergency Recall Operation.
11. Transmit signal to activate door release devices.
12. Transmit signal to release smoke and fire curtains and shutters.
13. Transmit signal to shut down music systems.
D. Alarm Reset: System remains in alarm mode until manually reset with key-accessible reset function; system resets only if initiating circuits are out of alarm mode.
E. Drill Sequence of Operation: Manual drill function causes alarm mode operation as described.

PART 3 EXECUTION

3.01 INSTALLATION
A. Install in accordance with applicable codes, NFPA 72, NFPA 70, and contract documents.
B. Conceal all wiring, conduit, boxes, and supports where installed in finished areas.
C. Install all fire alarm system wiring which is exposed or located in concealed or inaccessible areas in conduit. Plenum rated cable may be used only where concealed above accessible ceilings or within accessible shafts.
D. Separate fire alarm wiring from any open conductors of Class 1 circuits and do not place in any conduit, junction box, or raceway containing Class 1 circuits. Provide the following minimum clearances:
1. 48 inches (1220 mm) from motors, generators, frequency converters, transformers, medical imaging equipment, variable frequency drives, and uninterruptible power supplies.
2. 12 inches (300 mm) from power conduits, power cables, panelboards, switchboards, and motor control centers.
3. 5 inches (125 mm) from fluorescent and high frequency luminaires.
4. 6 inches (150 mm) from flues, hot water pipes, and steam pipes.
E. Wiring for low voltage control, alarm notification, emergency communication, and similar power-limited auxiliary functions may be installed in the same conduit as initiating and signaling line circuits. Design system to permit simultaneous operation of all circuits without interference or loss of signals.
F. Obtain Owner's approval of locations of notification appliances prior to rough-in.
G. Install components at the following mounting heights:
1. Control Units: Top at 72 inches (1800 mm) above finished floor.
2. Remote Annunciators: Top at 60 inches (1500 mm) above finished floor.
3. Manual Pull Stations: Centerline at 46 inches (1150 mm) above finished floor.
4. Audible Notification Appliances: Top at 90 inches (2250 mm) above finished floor or 6 inches (150 mm) below finished ceiling, whichever is lower.
5. Visual Notification Appliances: Top at 96 inches (2400 mm) above finished floor or 6 inches (150 mm) below finished ceiling, whichever is lower.
6. Combination Audible/Visual Notification Appliances: Top at 96 inches (2400 mm) above finished floor or 6 inches (150 mm) below finished ceiling, whichever is lower.
H. Install end-of-line resistor in box with last device or separate box adjacent to last device in circuit.
I. Install outlet boxes for door holders to withstand 80 pounds of pulling force.
J. Install control relays within 3 feet (900 mm) of the controlled equipment.
K. Install duct smoke detector remote test stations and/or remote alarm LED annunciators; coordinate locations with the Owner and the Authority Having Jurisdiction prior to rough-in.
L. Make conduit and wiring connections to all initiating devices, notification appliances, control units, components of systems requiring a fire alarm interface, addressable modules, etc. for a complete, code-compliant, operational system.
M. Connect control unit to a separate dedicated branch circuit with a separate, red, dedicated circuit breaker with lock-on accessory and label circuit as FIRE ALARM.

3.02 INSPECTION AND TESTING FOR COMPLETION
A. Complete NFPA 72 "RECORD OF COMPLETION" form.
B. Notify the Authority Having Jurisdiction and comply with their requirements for scheduling inspections and tests and for observation by their personnel.
C. Perform inspection and testing in accordance with NFPA 72 and requirements of the Authority Having Jurisdiction.
D. Document each inspection and test, correct any defective work, and retest until entire system complies with the requirements of NFPA 72, the Authority Having Jurisdiction, and the contract documents.

3.03 OWNER PERSONNEL INSTRUCTION
A. Provide hands-on instruction for the Owner's designated representative.
B. Provide the services of instructors, teaching aids, and copies of operation and maintenance data during instruction.
C. Digitally record all training session(s).

3.04 CLOSEOUT
A. Substantial Completion: Substantial Completion cannot be achieved until inspection and testing is successful, all aspects of operation have been demonstrated to Owner, final acceptance of the fire alarm system has been given by the Authority Having Jurisdiction, the occupancy permit has been issued, and the personnel instruction is complete.
B. Demonstration: Demonstrate proper operation of all functions to Owner. Demonstration may be combined with inspection and testing required by the Authority Having Jurisdiction.
C. Closeout Documentation and Materials:
1. Provide the following closeout documentation and materials to the Owner:
a. Manufacturer's cut sheets, owner's manual, manufacturer's published instructions, and troubleshooting guides covering all system equipment.
b. Detailed but easy to read explanation of procedures to be used by non-technical personnel in the event of system trouble, when routine testing is being conducted, and for fire drills.
c. Record drawings complying with NFPA 72.
d. NFPA 72 "RECORD OF COMPLETION" form.
e. NFPA 72 "SYSTEM RECORD OF INSPECTION AND TESTING" form.
f. Preventive maintenance schedule.
g. Testing and inspection procedures and schedule.
h. Digital recording of training session(s).

3.05 MAINTENANCE
A. Provide to Owner, at no extra cost, a written maintenance contract for 2 years, to include the work described below.
B. Perform routine inspection, testing, and preventive maintenance required by NFPA 72, including:
1. Maintenance of fire safety interface and supervisory devices connected to fire alarm system.
2. Repairs required, unless due to improper use, accidents, or negligence beyond the control of the maintenance contractor.
3. Record keeping required by NFPA 72 and Authority Having Jurisdiction.
C. Provide trouble call-back service upon notification by Owner:
1. Provide on-site response within 2 hours of notification.
2. Include allowance for call-back service during normal working hours at no extra cost to Owner.
3. Owner will pay for call-back service outside of normal working hours on an hourly basis, based on actual time spent at site and not including travel time; include hourly rate and definition of normal working hours in maintenance contract.
D. Provide a complete description of preventive maintenance, systematic examination, adjustment, cleaning, inspection, and testing, with a detailed schedule.
E. Maintain a log at each fire alarm control unit, listing the date and time of each inspection and call-back visit, the condition of the system, nature of the trouble, correction performed, and parts replaced. Submit duplicate of each log entry to Owner's representative upon completion of site visit.
F. Comply with Owner's requirements for access to facility and security.

END OF SECTION

Schnackel engineers
New York ■ Miami ■ Omaha ■ Los Angeles ■ Seattle ■ Honolulu
800-581-0963 www.schnackel.com

SE JOB#: 250720

ktgy
17911 Von Karman Ave.
Suite 200
Irvine, CA 92614
ktgy.com
949.851.2133

ktgy Project Number
Contact DORINA WATSON
Email dwatson@ktgy.com
Senior Director DAVID SCHMITZ
Designer RUSSEL ROSALES

Developer
SEDC
23906 SOBOBA ROAD
SAN JACINTO, CA 92581

PHONE: (951) 663-2058

SOBOBA SOVOVATUM VILLAGE PHASE-2
- SAN JACINTO, CA

No.	DATE	DESCRIPTION

Client is responsible for notifying architect in writing for any discovered errors or omissions in the plans and specifications during construction of the project. Failure for Client to notify Architect of any known errors or omissions in the plans or specifications, and proceeding with constructing the portion of work shown in the plans or specifications containing known errors or omissions shall be a waiver by Client for any liability of Architect for such known errors or omissions. Client releases Architect for any liability for such portions of work, and Architect shall not be liable for any delay damages, change orders, repair costs, removal or demolition costs, or replacement of any such portions of work.

2026-05-26, ISSUED FOR BID

Sheet Name
FIRE ALARM SPECIFICATIONS

FA2-11

COPYRIGHT 2024 KTGY GROUP INC. These plans and specifications are protected by United States copyright law and may not be used, reproduced, distributed, transmitted, displayed, or modified in any way without the prior written consent of KTGY Group, Inc. or the authorized copyright holder or licensee.

STATE OF CALIFORNIA

Electrical Power Distribution

CALIFORNIA ENERGY COMMISSION

CERTIFICATE OF COMPLIANCE			NRCC-ELC-E

This document is used to demonstrate compliance with mandatory requirements in §130.5, for electrical systems in newly constructed nonresidential and hotel/motel occupancies and §160.6 and §160.9 for electrical systems in newly constructed multifamily occupancies. Additions and alterations to electrical service systems in nonresidential and hotel/motel occupancies will also use this document to demonstrate compliance per §141.0(a) or §141.0(b)2P for alterations. For multifamily addition or alterations compliance will be documented per §180.1(a) or §180.2 (b)4Bvii

Project Name: Sovovatum Village QSR Vanilla Shell		**Report Page:**	**(Page 1 of 5)**
Project Address:	Soboba Sovovatum Village	**Date Prepared:**	5/22/2026

A. GENERAL INFORMATION

01	Project Location (city)	San Jacinto	02	Climate Zone	10
			03	Occupancy Types Within Project:	

● Financial Institution ● Office ● Retail ● Support Areas ● All Other Occupancies

B. PROJECT SCOPE

This table includes electrical systems that are within the scope of the permit application.

01	02	03	04	05	06	07
Electrical Service Designation/ Description	Scope of Work [1]	Rating[2] (kVA)	Utility Provided Metering System Exception to §130.5(a)/§160.6(a)[3]	System subject to CA Elec Code Article 517 Exception to §130.5(a)and (b)	Demand Response Controls	Provides power to dwelling units/common living areas only in multifamily occupancy
Panels CL1, CL2	New electrical service equipment and meter	72	☐	☐	Where required, demand response controls must be specified which are capable of receiving and automatically responding to at least one standards based messaging protocol which enables demand response after receiving a demand response signal. Sections §120.2/§160.3, §130.1/§160.5, and §130.3/§160.5, and mechanical, indoor lighting, and sign lighting Certificate of Compliance documents will indicate when demand response controls are required.	☐

[1]FOOTNOTES: Adding only new feeders and branch circuits triggers Voltage Drop 130.5(c)/160.6(c), no other requirements from 130.5/160.6 are required.
[2] If common use areas in a multifamily are submetered, rating is for submeter size serving common use areas.
[3] Applicable if the utility company is providing a metering system that indicates instantaneous kW demand and kWh for a utility-defined period.

STATE OF CALIFORNIA

Electrical Power Distribution

CALIFORNIA ENERGY COMMISSION

CERTIFICATE OF COMPLIANCE		NRCC-ELC-E
Project Name: Sovovatum Village QSR Vanilla Shell	**Report Page:**	**(Page 2 of 5)**
	Date Prepared:	5/22/2026

C. COMPLIANCE RESULTS

Results in this table are automatically calculated from data input and calculations in Tables F through J. Note: If any cell on this table says "COMPLIES with Exceptional Conditions" refer to Table D. Exceptional Conditions for guidance or see applicable Table referenced below.

01		02		03		04	05	06
Service Electrical Metering §130.5(a)/ §160.6(a) (See Table F)	AND	Separation for Monitoring §130.5(b)/ §160.6(b) (See Table G)	AND	Voltage Drop §130.5(c)/ §160.6(c) (See Table H)	AND	Controlled Receptacles §130.5(d)/ §160.6(d) (See Table I)	Electric Ready §160.9 (See Table J)	**Compliance Results**
Yes	AND	Yes	AND	Yes	AND			COMPLIES

D. EXCEPTIONAL CONDITIONS

This table is auto-filled with uneditable comments because of selections made or data entered in tables throughout the form.

E. ADDITIONAL REMARKS

This table includes remarks made by the permit applicant to the Authority Having Jurisdiction.

F. SERVICE ELECTRICAL METERING

This table includes new or replacement electrical service systems OR equipment to demonstrate compliance with §130.5(a) / §160.6(a). For multifamily occupancies, submetered systems that provide power to common use areas must meet the following metering requirements. Submetered systems providing power to dwelling units do not.

01	02	03				04	05	
		Required Metering Capabilities per Table 130.5-A					Field Inspector	
Electrical Service Designation/ Description	Rating[1] (kVA)	Instantaneous Demand (kW)	Historical Peak Demand (kW)	Tracking kWh for user-defined period	kWh per rate period	Location of Requirements in Construction Documents	Pass	Fail
Panels CL1, CL2	72	☒	☐	☒	☐	E2-12	☐	☐

[1] FOOTNOTES: If common use areas in a multifamily are submetered, rating is for submeter size serving common use areas.

STATE OF CALIFORNIA

Electrical Power Distribution

CALIFORNIA ENERGY COMMISSION

CERTIFICATE OF COMPLIANCE		NRCC-ELC-E
Project Name: Sovovatum Village QSR Vanilla Shell	**Report Page:**	**(Page 3 of 5)**
	Date Prepared:	5/22/2026

G. SEPARATION OF ELECTRICAL CIRCUITS FOR ENERGY MONITORING

This table includes entirely new or complete replacement electrical power distribution systems to demonstrate compliance with §130.5(b)/§160.6(b). Any load types that are not included in the service do not need to be shown. For multifamily occupancies, submetered systems that provide power to dwelling units do not need to meet these separation requirements and therefore load types on those submetered systems also do not need to be shown.

01	02	03	04	05	
				Field Inspector	
Load Type per Table 130.5-B [1]	Minimum Required Separation of Load per Table 130.5-B	Compliance Method[2]	Location of Requirements in Construction Documents	Pass	Fail
Panels CL1, CL2					
Lighting including exit, egress and exterior	All lighting in aggregate	NA: Add/Alt to feeders and branch circuits only	E- Sheets	☐	☐
HVAC systems and components	All HVAC in aggregate	NA: Add/Alt to feeders and branch circuits only	E- Sheets	☐	☐
Domestic and service water systems	All loads in aggregate	NA: Add/Alt to feeders and branch circuits only	E- Sheets	☐	☐
Plug Loads and appliances less than 25kVA	All plug loads in aggregate Groups of plug loads exceeding 25 kVA connected load in an area less than 5000 sf	NA: Add/Alt to feeders and branch circuits only	E- Sheets	☐	☐

** NOTES: If "Other*" is selected under Compliance Method above, please indicate how compliance has been achieved in the space provided below.*

[1] FOOTNOTES: For each separate load type, up to 10% of the connected load may be of any type.
[2] Method 1: Switchboards/ motor control centers/ panelboard loads disaggregated for each load type.
Method 2: Switchboards/ motor control centers/ panelboard supply other distribution equipment with loads disaggregated for each load type.
Method 3: Branch circuits serve load types individually and provisions for adding future branch circuit monitoring.
Method 4: Complete metering system measures and reports loads by type.
See Chapter 8 of the Nonresidential Compliance Manual for more detail on Compliance Methods.

H. VOLTAGE DROP

This table includes entirely new or complete replacement electrical power distribution systems, or alterations that add, modify or replace both feeders and branch circuits to demonstrate compliance with §130.5(c)/ §160.6(c). For alterations, only the altered circuits must demonstrate compliance per §141.0(b)2Piii/ §180.2(b)4Bviic.

STATE OF CALIFORNIA

Electrical Power Distribution

CALIFORNIA ENERGY COMMISSION

CERTIFICATE OF COMPLIANCE		NRCC-ELC-E
Project Name: Sovovatum Village QSR Vanilla Shell	**Report Page:**	**(Page 4 of 5)**
	Date Prepared:	5/22/2026

H. VOLTAGE DROP

01	02				03	04	05	
Electrical Service Designation/Description	Combined Voltage Drop on Installed Feeder/Branch Circuit Conductors Compliance Method				Location of Voltage Drop Calculations[1]	Sheet Number for Voltage Drop Calculations in Construction Documents	Field Inspector Pass	Fail
Panels CL1, CL2	☒	Voltage drop less than 5%	☐	Permitted by CA Elec Code (Exception to 130.5(c))*	In construction documents	E- Sheets	☐	☐

** NOTES: If "Permitted by CA Elec Code *" is selected under Compliance Method above, please indicate where the exception applies in the space provided below.*

[1] FOOTNOTES: Voltage drop calculations may be attached to the permit application outside the construction documents if allowed by the Authority Having Jurisdiction. Select "attached" if applicable. If calculations will be the responsibility of the installing contractor, select "Contractor Responsible".

J. ELECTRIC READY BUILDINGS

This section does not apply to this project.

K. DECLARATION OF REQUIRED CERTIFICATES OF INSTALLATION

Selections have been made based on information provided in this document. If any selection have been changed by permit applicant, an explanation should be included in Table E. Additional Remarks. These documents must be provided to the building inspector during construction and can be found online

Form/Title
NRCI-ELC-E - Must be submitted for all buildings

STATE OF CALIFORNIA

Electrical Power Distribution

CALIFORNIA ENERGY COMMISSION

CERTIFICATE OF COMPLIANCE			NRCC-ELC-E
Project Name: Sovovatum Village QSR Vanilla Shell		**Report Page:**	**(Page 5 of 5)**
Project Address:	Soboba Sovovatum Village	**Date Prepared:**	5/22/2026

DOCUMENTATION AUTHOR'S DECLARATION STATEMENT

I certify that this Certificate of Compliance documentation is accurate and complete.

Documentation Author Name: Gregory Schnackel, P.E.	Documentation Author Signature: [signature]
Company: Schnackel Engineers, Inc.	Signature Date: 2026-05-22
Address: 3035 South 72nd Street	CEA/AEA/ECC Certification Identification (if applicable): E-14631, M-33299
City/State/Zip: Omaha NE 68124	Phone: (402) 391-7680

RESPONSIBLE PERSON'S DECLARATION STATEMENT

I certify the following under penalty of perjury, under the laws of the State of California:

1. The information provided on this Certificate of Compliance is true and correct.
2. I am eligible under Division 3 of the Business and Professions Code to accept responsibility for the building design or system design identified on this Certificate of Compliance (responsible designer)
3. The energy features and performance specifications, materials, components, and manufactured devices for the building design or system design identified on this Certificate of Compliance conform to the requirements of Title 24, Part 1 and Part 6 of the California Code of Regulations.
4. The building design features or system design features identified on this Certificate of Compliance are consistent with the information provided on other applicable compliance documents, worksheets, calculations, plans and specifications submitted to the enforcement agency for approval with this building permit application.
5. I will ensure that a completed signed copy of this Certificate of Compliance shall be made available with the building permit(s) issued for the building, and made available to the enforcement agency for all applicable inspections. I understand that a completed signed copy of this Certificate of Compliance is required to be included with the documentation the builder provides to the building owner at occupancy.

Responsible Person Name: Gregory Schnackel, P.E.	Responsible Person Signature: [signature]
Responsible Person Scope:	
Company: Schnackel Engineers, Inc.	Date Signed: 2026-05-22
Address: 3035 South 72nd Street	License: E-14631
City/State/Zip: Omaha Nebraska 68124	Phone: (402) 391-7680

REGISTERED PROFESSIONAL ENGINEER
GREGORY ROY SCHNACKEL
No. E14631
ELECTRICAL
STATE OF CALIFORNIA

STATE OF CALIFORNIA

Envelope Component Approach

CALIFORNIA ENERGY COMMISSION

CERTIFICATE OF COMPLIANCE			NRCC-ENV-E

This document is used to demonstrate compliance with mandatory requirements in §110.8(g) and §120.7(b)/ §160.1 for newly constructed nonresidential, hotel/ motel, multifamily and mixed-use buildings, and §141.0(b)1/ §180.2 for alterations, related to roof, wall and floor assemblies. It is also used to demonstrate compliance with prescriptive requirements in §140.3/ §170.2 for newly constructed buildings, and §141.0/ §180.1/ §180.2 for additions and alterations, related to roof, wall, floor, door, fenestration and daylighting requirements.

Project Name: Sovovatum Village QSR Vanilla Shell		**Report Page:**	**(Page 1 of 15)**
Project Address:	Soboba Sovovatum Village	**Date Prepared:**	5/22/2026

A. GENERAL INFORMATION

01	Project Location (city)	San Jacinto	05	# of Stories (Habitable Above Grade)	2
02	Zipcode		06	Total Conditioned Floor Area (ft^2)	5239
03	Climate Zone	10	07	Total Unconditioned Floor Area (ft^2)	0
04	Occupancy Types Within Project: (select all that apply): If one occupancy constitutes >= 80% of the conditioned floor area, the entire building envelope may be designed to comply with the provisions of that occupancy per § 100.0(f).		08	☐	Project includes unconditioned enclosed space(s) > 5,000 ft^2 under a roof with a ceiling height of at least 15 ft. [1]

● Financial Institution ● Office ● Retail ● Support Areas ● All Other Occupancies

[1] FOOTNOTE: Enclosed spaces > 5,000 ft^2 directly under roof with ceiling height > 15 ft in climate zones 2 through 15 are required to meet the minimum daylighting requirements defined in §140.3(c)/ §170.2(b). Compliance with §140.3(c)/ §170.2(b) is documented in Table L. This is the only prescriptive requirement which applies to unconditioned spaces.

B. PROJECT SCOPE

This table specifies project envelope components within the permit application demonstrating compliance using the prescriptive paths outlined in §140.3/ §170.2 and §141.0(a)1/ §180.1 and §141.0(b)1 and 2/ §180.2 for additions and alterations.

My project consists of (check all that apply)			Component Types					
01			02					
☒	New Construction or Newly Conditioned Space		☒	Roof	☒	Walls	☒	Exterior Opaque Doors
	☐	One or more enclosed spaces > 5,000 ft^2 directly under roof with ceiling height > 15ft			☐	Floors	☒	Fenestration/ Glazed Doors[1]
☐	Addition of conditioned space		☐	Roof	☐	Walls	☐	Exterior Opaque Doors
	☐	One or more enclosed spaces > 5,000 ft^2 directly under roof with ceiling height > 15ft						
	☐	Addition is <=700 ft^2			☐	Floors	☐	Fenestration/ Glazed Doors[1]
	☐	Addition is >700 ft^2						
☐	Alteration of conditioned space		☐	Roof Assembly	☐	Walls	☐	Exterior Opaque Doors
	☐	One or more enclosed spaces > 5,000 ft^2 directly under roof with ceiling height > 15ft and lighting system installed for the first time	☐	Roofing Material [2]	☐	Floors	☐	Fenestration

STATE OF CALIFORNIA

Envelope Component Approach

CALIFORNIA ENERGY COMMISSION

CERTIFICATE OF COMPLIANCE		NRCC-ENV-E
Project Name: Sovovatum Village QSR Vanilla Shell	**Report Page:**	**(Page 2 of 15)**
	Date Prepared:	5/22/2026

B. PROJECT SCOPE

[1]FOOTNOTE: Doors that are more than 25% glass in area are considered Glazed Doors and should be documented on table K with fenestration.
[2]Roof recovers and replacements must also check "Roof Assembly" box and document compliance with insulation requirements in Table F. Roof recoats may document compliance with roof material only in Table G.

C. COMPLIANCE RESULTS

Results in this table are automatically calculated from data input and calculations in Tables F through L. Note: If any cell on this table says "COMPLIES with Exceptional Conditions" refer to Table D. Exceptional Conditions for guidance or see the applicable table referenced below.

Opaque Envelope Components					Fenestration	Daylighting Spaces > 5,000ft[2]	Compliance Results
Roof Assembly	**Roofing Materials**	**Walls**	**Floors**	**Doors**			
01	02	03	04	05	06	07	08
(See Table F)	(See Table G)	(See Table H)	(See Table I)	(See Table J)	(See Table K)	(See Table L)	COMPLIES
Yes	Yes	Yes		Yes	Yes		

D. EXCEPTIONAL CONDITIONS

This table is auto-filled with uneditable comments because of selections made or data entered in tables throughout the form.

E. ADDITIONAL REMARKS

This table includes remarks made by the permit applicant to the Authority Having Jurisdiction.

F. ROOF ASSEMBLY SCHEDULE

This table demonstrates compliance for prescriptive roof assembly requirements in §140.3(a)1B/ §170.2(a)1B for new construction, §141.0(a)/ §180.1 for additions, or §141.0(b)2Biii/ §180.2 for alterations,

01	Indicate roof types included in the project:	☒ Framed	☐ Framed-Multifamily	☐ SIPS	☐ Span Deck & Concrete	☐ Metal Panels	☐ Metal Building

Framed Roof Assemblies

01	☒	Include Framed Roof Assemblies in Area-Weighted Average U-factor Calculation [1]		
02	03	04	05	06

STATE OF CALIFORNIA

Envelope Component Approach

CALIFORNIA ENERGY COMMISSION

CERTIFICATE OF COMPLIANCE		NRCC-ENV-E
Project Name: Sovovatum Village QSR Vanilla Shell	**Report Page:**	**(Page 3 of 15)**
	Date Prepared:	5/22/2026

F. ROOF ASSEMBLY SCHEDULE

Framed Roof Assemblies

Tag/Plan Detail ID	Name/Description	Status	Exception to Roof Insulation Requirements in §141.0(b)2Biii (Alts. Only)	Occupancy Type
R-32 Roof	Roof	New		Nonresidential/ Relocatable 1 CZ
R-32 Roof	Roof	New		Nonresidential/ Relocatable 1 CZ
R-32 Roof	Roof	New		Nonresidential/ Relocatable 1 CZ
R-32 Roof	Roof	New		Nonresidential/ Relocatable 1 CZ
R-32 Roof	Roof	New		Nonresidential/ Relocatable 1 CZ

07	08	09	10	11	12	13	14	15		16
Tag/Plan Detail ID	How Design U-factor was determined	Roof Type & Frame Material	Frame Spacing Depth	Cavity Insulation per Design [2]	Continuous Insulation per Design [2]	Thermal Performance Unit	Required Thermal Performance [3]	U-factor per Design		Net Area [4] ft^2
Roof	JA4 Tables	Wood		0	32	U-factor	0.028	per JA4		256
								per Software/ Other	0.028	
Roof	JA4 Tables	Wood		0	32	U-factor	0.028	per JA4		1400
								per Software/ Other	0.028	
Roof	JA4 Tables	Wood		0	32	U-factor	0.028	per JA4		50
								per Software/ Other	0.028	
Roof	JA4 Tables	Wood		0	32	U-factor	0.028	per JA4		173
								per Software/ Other	0.028	

STATE OF CALIFORNIA

Envelope Component Approach

CALIFORNIA ENERGY COMMISSION

CERTIFICATE OF COMPLIANCE		NRCC-ENV-E
Project Name: Sovovatum Village QSR Vanilla Shell	**Report Page:**	**(Page 4 of 15)**
	Date Prepared:	5/22/2026

F. ROOF ASSEMBLY SCHEDULE

07	08	09	10	11	12	13	14	15		16
Tag/Plan Detail ID	How Design U-factor was determined	Roof Type & Frame Material	Frame Spacing Depth	Cavity Insulation per Design [2]	Continuous Insulation per Design [2]	Thermal Performance Unit	Required Thermal Performance [3]	U-factor per Design		Net Area [4] ft^2
Roof	JA4 Tables	Wood		0	32	U-factor	0.028	per JA4		721
								per Software/ Other	0.028	
17	Location in Construction Documents Showing Air Barrier	A-Sheets								

[1]FOOTNOTES: If any individual assembly is non-compliant, assemblies may show compliance using an area-weighted calculation. Metal building roofs may not be combined with other roof types. The area-weighted compliance option is not available for alterations demonstrating compliance with R-values in Table 141.0-C.
[2] For alterations using U-factor as the Thermal Performance Unit, at least R-10 insulation must be above deck.
[3] If "R-value" is shown in cell 13 as the Thermal Performance Unit, the R-value shown here is for continuous insulation per Table 141.0-C.
[4] Roof area minus any fenestration/ skylight area

Area-Weighted Average U-factor Compliance Calculation for Framed/ SIPs/ Span Deck & Concrete/ Metal Panel Roofs

01	02	03	04	05
Roof Type	Total Area of Roof Type (ft^2)	Area-weighted U-factor for Roof Type Required	Designed	Compliance Results Using Area-Weighted Calculation Option
Framed	2600	0.028	0.028	
Total for all Roof Types:	**2600**	**0.028**	**0.028**	**COMPLIES**

G. RATED ROOFING MATERIAL (COOL ROOF)

This table demonstrates compliance with prescriptive roof material requirements in §140.3(a)1A/ §170.2(a)1A for new construction, §141.0(a)/ §180.1 for additions, and §141.0(b)2B/ §180.2 for alterations. Roof recovers and replacements must also document compliance with insulation requirements in Table F. Roof recoats may document compliance with roof material only in Table G.

01	02	03	04	05	06	07	08	09	10
Tag/Plan Detail ID	Name/ Description/ Location	Status	Occupancy Type	Roof Slope	Roof Material	Compliance Method	Required Minimum Material Performance	Designed Material Performance	U-factor / R-value of Assembly

ktgy

17911 Von Karman Ave.
Suite 200
Irvine, CA 92614
ktgy.com
949.851.2133

ktgy Project Number
Contact DORINA WATSON
Email dwatson@ktgy.com
Senior Director DAVID SCHMITZ
Designer RUSSEL ROSALES

Developer
SEDC
23906 SOBOBA ROAD
SAN JACINTO, CA 92581

PHONE: (951) 663-2058

SOBOBA SOVOVATUM VILLAGE PHASE-2

SAN JACINTO, CA

No.	DATE	DESCRIPTION

Client is responsible for notifying architect in writing for any discovered errors or omissions in the plans and specifications during construction of the project. Failure for Client to notify Architect of any known errors or omissions in the plans or specifications, and proceeding with constructing the portion of work shown in the plans or specifications containing known errors or omissions shall be a waiver by Client for any liability of Architect for such known errors or omissions. Client releases Architect for any liability for such portions of work, and Architect shall not be liable for any delay damages, change orders, repair costs, removal or demolition costs, or replacement of any such portions of work.

2026-05-26, ISSUED FOR BID

Sheet Name
ENERGY COMPLIANCE

Schnackel engineers
New York ■ Miami ■ Omaha ■ Los Angeles ■ Seattle ■ Honolulu
800-581-0963 www.schnackel.com

EN1-11

SE JOB#: 250720

COPYRIGHT 2024 KTGY GROUP INC. These plans and specifications are protected by United States copyright law and may not be used, reproduced, distributed, transmitted, displayed, or modified in any way without the prior written consent of KTGY Group, Inc. or the authorized copyright holder or licensee.

STATE OF CALIFORNIA
Envelope Component Approach
CALIFORNIA ENERGY COMMISSION

CERTIFICATE OF COMPLIANCE		NRCC-ENV-E
Project Name: Sovovatum Village QSR Vanilla Shell	**Report Page:**	**(Page 5 of 15)**
	Date Prepared:	5/22/2026

G. RATED ROOFING MATERIAL (COOL ROOF)

R-32 Roof	Roof	New	Nonresidential	Low slope	To Be Determined	Aged solar reflectance and thermal emittance	Reflectance	0.63	Reflectance[3]	0.63
							Emittance	0.75	Emittance	0.75
							SRI		SRI	

H. WALL ASSEMBLY SCHEDULE

This table demonstrates compliance with prescriptive wall assembly requirements in §140.3(a)/ §170.2(a) for new constructions, §141.0(a)/ §180.1 for additions and §141.0(b)1B/ §180.2 for alterations.

01 Indicate wall types included in the project: [1] ☒ Framed ☐ Mass (new only) ☐ Concrete Sandwich Panel (new only) ☐ SIPS ☐ ICF (new only) ☐ Metal Panels ☐ Metal Building ☐ Spandrel/ Curtain Wall ☐ Straw Bale ☐ Log Home (new only)

[1] FOOTNOTES: Wall types indicated above as "(new only)" do not have Title 24, Part 6 requirements for alterations. New construction and additions do have requirements and should be clicked above and compliance demonstrated within this table.

Framed Walls

01	☐	Calculate Area-Weighted Average U-factor for Metal Framed Walls [1]
02	☒	Include Wood Framed Walls in Area-Weighted Average U-factor Calculation [1]

03	04	05	06	07	08	09	10	11	12		13
Tag/Plan Detail ID	Occupancy & Status	How Design U-factor was determined	Location/ Fire Rating	Frame Material, Spacing & Depth	Cavity Insulation per Design	Continuous Insulation per Design	Thermal Performance Unit	Required Thermal Performance	U-factor per Design		Net Area [3] ft²
N Exterior Wall	Nonresidential/ Relocatable 1 CZ: New	JA4 Tables	Exterior wall	2x6	19	6	U-factor	0.053	per JA4 per Software/ Other	0.051	496
E Exterior Wall	Nonresidential/ Relocatable 1 CZ: New	JA4 Tables	Exterior wall	2x6	19	6	U-factor	0.053	per JA4 per Software/ Other	0.051	478

STATE OF CALIFORNIA
Envelope Component Approach
CALIFORNIA ENERGY COMMISSION

CERTIFICATE OF COMPLIANCE		NRCC-ENV-E
Project Name: Sovovatum Village QSR Vanilla Shell	**Report Page:**	**(Page 6 of 15)**
	Date Prepared:	5/22/2026

H. WALL ASSEMBLY SCHEDULE

03	04	05	06	07	08	09	10	11	12		13
Tag/Plan Detail ID	Occupancy & Status	How Design U-factor was determined	Location/ Fire Rating	Frame Material, Spacing & Depth	Cavity Insulation per Design	Continuous Insulation per Design	Thermal Performance Unit	Required Thermal Performance	U-factor per Design		Net Area [3] ft²
S Exterior Wall	Nonresidential/ Relocatable 1 CZ: New	JA4 Tables	Exterior wall	2x6	19	6	U-factor	0.053	per JA4 per Software/ Other	0.051	260
S Exterior Wall	Nonresidential/ Relocatable 1 CZ: New	JA4 Tables	Exterior wall	2x6	19	6	U-factor	0.053	per JA4 per Software/ Other	0.051	272
W Exterior Wall	Nonresidential/ Relocatable 1 CZ: New	JA4 Tables	Exterior wall	2x6	19	6	U-factor	0.053	per JA4 per Software/ Other	0.051	272
W Exterior Wall	Nonresidential/ Relocatable 1 CZ: New	JA4 Tables	Exterior wall	2x6	19	6	U-factor	0.053	per JA4 per Software/ Other	0.051	102
N Exterior Wall	Nonresidential/ Relocatable 1 CZ: New	JA4 Tables	Exterior wall	2x6	19	6	U-factor	0.053	per JA4 per Software/ Other	0.051	244
N Exterior Wall	Nonresidential/ Relocatable 1 CZ: New	JA4 Tables	Exterior wall	2x6	19	6	U-factor	0.053	per JA4 per Software/ Other	0.051	294

STATE OF CALIFORNIA
Envelope Component Approach
CALIFORNIA ENERGY COMMISSION

CERTIFICATE OF COMPLIANCE		NRCC-ENV-E
Project Name: Sovovatum Village QSR Vanilla Shell	**Report Page:**	**(Page 7 of 15)**
	Date Prepared:	5/22/2026

H. WALL ASSEMBLY SCHEDULE

03	04	05	06	07	08	09	10	11	12		13
Tag/Plan Detail ID	Occupancy & Status	How Design U-factor was determined	Location/ Fire Rating	Frame Material, Spacing & Depth	Cavity Insulation per Design	Continuous Insulation per Design	Thermal Performance Unit	Required Thermal Performance	U-factor per Design		Net Area [3] ft²
S Exterior Wall	Nonresidential/ Relocatable 1 CZ: New	JA4 Tables	Exterior wall	2x6	19	6	U-factor	0.053	per JA4 per Software/ Other	0.051	294
W Exterior Wall	Nonresidential/ Relocatable 1 CZ: New	JA4 Tables	Exterior wall	2x6	19	6	U-factor	0.053	per JA4 per Software/ Other	0.051	420
N Exterior Wall	Nonresidential/ Relocatable 1 CZ: New	JA4 Tables	Exterior wall	2x6	19	6	U-factor	0.053	per JA4 per Software/ Other	0.051	100
E Exterior Wall	Nonresidential/ Relocatable 1 CZ: New	JA4 Tables	Exterior wall	2x6	19	6	U-factor	0.053	per JA4 per Software/ Other	0.051	85
E Exterior Wall	Nonresidential/ Relocatable 1 CZ: New	JA4 Tables	Exterior wall	2x6	19	6	U-factor	0.053	per JA4 per Software/ Other	0.051	289
N Exterior Wall	Nonresidential/ Relocatable 1 CZ: New	JA4 Tables	Exterior wall	2x6	19	6	U-factor	0.053	per JA4 per Software/ Other	0.051	170

STATE OF CALIFORNIA
Envelope Component Approach
CALIFORNIA ENERGY COMMISSION

CERTIFICATE OF COMPLIANCE		NRCC-ENV-E
Project Name: Sovovatum Village QSR Vanilla Shell	**Report Page:**	**(Page 8 of 15)**
	Date Prepared:	5/22/2026

H. WALL ASSEMBLY SCHEDULE

03	04	05	06	07	08	09	10	11	12		13
Tag/Plan Detail ID	Occupancy & Status	How Design U-factor was determined	Location/ Fire Rating	Frame Material, Spacing & Depth	Cavity Insulation per Design	Continuous Insulation per Design	Thermal Performance Unit	Required Thermal Performance	U-factor per Design		Net Area [3] ft²
N Exterior Wall	Nonresidential/ Relocatable 1 CZ: New	JA4 Tables	Exterior wall	2x6	19	6	U-factor	0.053	per JA4 per Software/ Other	0.051	175
E Exterior Wall	Nonresidential/ Relocatable 1 CZ: New	JA4 Tables	Exterior wall	2x6	19	6	U-factor	0.053	per JA4 per Software/ Other	0.051	538
S Exterior Wall	Nonresidential/ Relocatable 1 CZ: New	JA4 Tables	Exterior wall	2x6	19	6	U-factor	0.053	per JA4 per Software/ Other	0.051	238
W Exterior Wall	Nonresidential/ Relocatable 1 CZ: New	JA4 Tables	Exterior wall	2x6	19	6	U-factor	0.053	per JA4 per Software/ Other	0.051	153
W Exterior Wall	Nonresidential/ Relocatable 1 CZ: New	JA4 Tables	Exterior wall	2x6	19	6	U-factor	0.053	per JA4 per Software/ Other	0.051	340
14	Location in Construction Documents Showing Air Barrier	A-Sheets									

STATE OF CALIFORNIA
Envelope Component Approach
CALIFORNIA ENERGY COMMISSION

CERTIFICATE OF COMPLIANCE		NRCC-ENV-E
Project Name: Sovovatum Village QSR Vanilla Shell	**Report Page:**	**(Page 9 of 15)**
	Date Prepared:	5/22/2026

H. WALL ASSEMBLY SCHEDULE

03	04	05	06	07	08	09	10	11	12	13
Tag/Plan Detail ID	Occupancy & Status	How Design U-factor was determined	Location/ Fire Rating	Frame Material, Spacing & Depth	Cavity Insulation per Design	Continuous Insulation per Design	Thermal Performance Unit	Required Thermal Performance	U-factor per Design	Net Area [3] ft²

[1]FOOTNOTES: If any individual assembly is non-compliant, assemblies may show compliance using an area-weighted calculation. Metal framed walls may not be combined with other wall types. Wood framed walls are combined with SIPS, spandrel & curtain, metal panel and straw bale wall types. The area-weighted compliance option is not available for alterations demonstrating compliance with R-values in Table 141.0-C.
[2] If "R-value" is shown in cell 10 as the Thermal Performance Unit, the R-value shown here is for cavity insulation per §141.0(b)1B.
[3] Wall area minus any fenestration area

Area-Weighted Average U-factor Compliance Calculation for Wood Framed/ SIPs/ Spandrel/ Curtain/ Metal Panel/ Straw Bale Wall Types

01	02	03	04	05
Wall Type	Total Area of Wall Type (ft²)	Area-weighted U-factor for Wall Type		Compliance Results Using Area-Weighted Calculation Option
		Required	Designed	
Framed	5220	0.053	0.051	
Total for all Wall Types:	5220	0.053	0.051	COMPLIES

I. FLOOR ASSEMBLY SCHEDULE

This section does not apply to this project.

STATE OF CALIFORNIA
Envelope Component Approach
CALIFORNIA ENERGY COMMISSION

CERTIFICATE OF COMPLIANCE		NRCC-ENV-E
Project Name: Sovovatum Village QSR Vanilla Shell	**Report Page:**	**(Page 10 of 15)**
	Date Prepared:	5/22/2026

J. EXTERIOR DOOR SCHEDULE

This table demonstrates compliance with prescriptive exterior door requirements in §140.3(a)7/ §170.2(a)4 for new construction or additions. Doors which are being replaced (alterations) do not need to be documented in this table because there are no Title 24, Part 6 requirements that apply. Exterior doors separate conditioned space from unconditioned space or from ambient air. Doors that are more than 25% glass in area are considered Glazed Doors and should be documented on Table K with fenestration per Table B.

Exterior Opaque Doors

01	02	03	04	05	06	07	
Tag/Plan Detail ID	Name/Description	Occupancy Type	Door Type	Door Insulation	Maximum Allowed U-factor	U-factor per Design	
	Insulated Door	Nonresidential	Swinging	Any other wood door	0.7	per JA4	0.2

K. FENESTRATION AND GLAZED DOOR SCHEDULE

This table demonstrates compliance with prescriptive fenestration requirements in §140.3(a)5/ §170.2(a)3 for new constructions, §141.0(a)/ §180.1 for additions, or §141.0(b)2A/ §180.2 for alterations. Exterior doors that are more than 25% glass in area are considered Glazed Doors and should be documented on this table with fenestration.

01 Indicate fenestration types included in the project: [1] ☐ Vertical (alterations) ☒ Vertical (new) ☐ Skylights ☐ Glazed Doors (new only)

[1] FOOTNOTES: Fenestration types indicated above as "(new only)" do not have Title 24, Part 6 requirements for alterations. New construction and additions do have requirements and should be clicked above and compliance demonstrated within this table.

STATE OF CALIFORNIA
Envelope Component Approach
CALIFORNIA ENERGY COMMISSION

CERTIFICATE OF COMPLIANCE		NRCC-ENV-E
Project Name: Sovovatum Village QSR Vanilla Shell	**Report Page:**	**(Page 11 of 15)**
	Date Prepared:	5/22/2026

K. FENESTRATION AND GLAZED DOOR SCHEDULE

Vertical Fenestration and Glazed Doors- Total Building & West Facing Area (New Construction & Additions Only)

01	02	03	04	05
Elevation Item Tag/ Description	Orientation (Azimuth)[1]	Gross Exterior Wall Area[2] (ft²)	Display Perimeter Length[2] (ft)	Vertical Fenestration Area per Design[3] (ft²)
North	North Facing	1674	0	123
East	East Facing	1732	0	342
South	South Facing	1416	0	352
West	West Facing	1315	0	0

06	Maximum Allowed Vertical Fenestration (ft²)- All Orientations	2414.8	07	Total Vertical Fenestration (ft²) per design- All Orientations: 817
08	Maximum Allowed Vertical Fenestration (ft²)- West Facing	526	09	Total Vertical Fenestration (ft²) per design- West Facing: 0

[1]FOOTNOTES: Orientation between 226 deg and 315 deg are considered "West Facing". A diagram has been provided in the Nonresidential Compliance Manual for visual reference.
[2]Do not include demising walls per §140.3(a)5 .
[3] Includes glazed door fenestration area .

Vertical Fenestration And Glazed Doors- U-factor, Solar Heat Gain Coefficient (RSHGC/ SHGC), Visible Transmittance (VT)

01	☒	Calculate Area-Weighted Average U-factor for Vertical Fenestration and Glazed Doors[1]
02	☒	Calculate Area-Weighted Average (R)SHGC for Vertical Fenestration and Glazed Doors[1]
03	☒	Calculate Area-Weighted Average VT for Vertical Fenestration and Glazed Doors[1]

Vertical Fenestration And Glazed Doors- U-factor, Solar Heat Gain Coefficient (RSHGC/ SHGC), Visible Transmittance (VT)

04	05	06	07	08	09		10	11	12	13
Tag/Plan Detail ID	Fenestration Type	Occupancy & Status	U-factor/ (R)SHGC Compliance Method	VT Compliance Method	Calculation Method for Performance Values per Design[2]		Product Performance Unit	Required Product Performance	Product Performance per Design	Area ft²
Window	Fixed window	Nonresidential/ Relocatable 1 CZ: : New			NFRC Certified		U-factor (max)	0.36	0.29	186
					☒	Overhang/ Slats used for RSHGC	(R)SHGC (max)	0.25	0.25	
							VT (min)	0.42	0.47	

STATE OF CALIFORNIA
Envelope Component Approach
CALIFORNIA ENERGY COMMISSION

CERTIFICATE OF COMPLIANCE		NRCC-ENV-E
Project Name: Sovovatum Village QSR Vanilla Shell	**Report Page:**	**(Page 12 of 15)**
	Date Prepared:	5/22/2026

K. FENESTRATION AND GLAZED DOOR SCHEDULE

Vertical Fenestration And Glazed Doors- U-factor, Solar Heat Gain Coefficient (RSHGC/ SHGC), Visible Transmittance (VT)

04	05	06	07	08	09		10	11	12	13
Tag/Plan Detail ID	Fenestration Type	Occupancy & Status	U-factor/ (R)SHGC Compliance Method	VT Compliance Method	Calculation Method for Performance Values per Design[2]		Product Performance Unit	Required Product Performance	Product Performance per Design	Area ft²
Storefront	Curtain wall	Nonresidential/ Relocatable 1 CZ: : New			NFRC Certified		U-factor (max)	0.41	0.29	176
					☒	Overhang/ Slats used for RSHGC	(R)SHGC (max)	0.26	0.25	
							VT (min)	0.46	0.47	
Window	Fixed window	Nonresidential/ Relocatable 1 CZ: : New			NFRC Certified		U-factor (max)	0.36	0.29	40
					☐	Overhang/ Slats used for RSHGC	(R)SHGC (max)	0.25	0.25	
							VT (min)	0.42	0.47	
Window	Fixed window	Nonresidential/ Relocatable 1 CZ: : New			NFRC Certified		U-factor (max)	0.36	0.29	176
					☐	Overhang/ Slats used for RSHGC	(R)SHGC (max)	0.25	0.25	
							VT (min)	0.42	0.47	
Window	Fixed window	Nonresidential/ Relocatable 1 CZ: : New			NFRC Certified		U-factor (max)	0.36	0.29	43
					☐	Overhang/ Slats used for RSHGC	(R)SHGC (max)	0.25	0.25	
							VT (min)	0.42	0.47	
Window	Fixed window	Nonresidential/ Relocatable 1 CZ: : New			NFRC Certified		U-factor (max)	0.36	0.29	40
					☐	Overhang/ Slats used for RSHGC	(R)SHGC (max)	0.25	0.25	
							VT (min)	0.42	0.47	
Window	Fixed window	Nonresidential/ Relocatable 1 CZ: : New			NFRC Certified		U-factor (max)	0.36	0.29	156
					☐	Overhang/ Slats used for RSHGC	(R)SHGC (max)	0.25	0.25	
							VT (min)	0.42	0.47	

STATE OF CALIFORNIA
Envelope Component Approach
CALIFORNIA ENERGY COMMISSION

CERTIFICATE OF COMPLIANCE		NRCC-ENV-E
Project Name: Sovovatum Village QSR Vanilla Shell	**Report Page:**	**(Page 13 of 15)**
	Date Prepared:	5/22/2026

K. FENESTRATION AND GLAZED DOOR SCHEDULE

Overhang Details for RSHGC per §140.3/ §170.2

26	27	28	29	30	31	32
SHGC of Window						RSHGC
0.25						0.157
0.25						0.139

[1]FOOTNOTES: If any individual fenestration product is non-compliant, products may show compliance using an area-weighted calculation. Chromogenic glazing is not included in area-weighted calculations. Area-weighted calculation shown in separate area-weighted table below.
[2]The NAG Default Calculation can only be used for alterations or dwelling units in buildings with <= 3 habitable stories. Alterations are limited to 200ft² of site built glazing and dwelling units are limited to 250ft² or 5% of conditioned floor area. If the fenestration does not meet these conditions, the only options for determining fenestration values are NFRC Certification or the Default Tables in §110.6.
[3] Overhangs must extend past the left and right window the same distance as the depth of the overhang or greater to show an affect on the RSHGC. If an overhang does not meet this requirement, the affect of the overhang will be ignored.
[4]Projecting includes casement and awning windows.

Area-Weighted Average U-factor, SHGC, VT Compliance Calculation for Vertical Fenestration And Glazed Doors

01	02	03	04	05
Product Performance Unit	Total Area of Fenestration (ft²)	Area-weighted Calculation for Fenestration		Compliance Results Using Area-Weighted Calculation Option
		Required	Designed	
U-Factor	817	0.36	0.29	COMPLIES
(R)SHGC	817	0.252	0.205	COMPLIES
VT	817	0.826	0.47	COMPLIES

L. DAYLIGHT IN LARGE ENCLOSED SPACES

This section does not apply to this project.

SE_FORM_230720

COPYRIGHT 2024 KTGY GROUP INC. These plans and specifications are protected by United States copyright law and may not be used, reproduced, distributed, transmitted, displayed, or modified in any way without the prior written consent of KTGY Group, Inc. or the authorized copyright holder or licensee.

ktgy
17911 Von Karman Ave.
Suite 200
Irvine, CA 92614
ktgy.com
949.851.2133

ktgy Project Number
Contact DORINA WATSON
Email dwatson@ktgy.com
Senior Director DAVID SCHMITZ
Designer RUSSEL ROSALES

Developer
SEDC
23906 SOBOBA ROAD
SAN JACINTO, CA 92581

PHONE: (951) 663-2058

SOBOBA SOVOVATUM VILLAGE PHASE-2
SAN JACINTO, CA

No.	DATE	DESCRIPTION

Client is responsible for notifying architect in writing for any discovered errors or omissions in the plans and specifications during construction of the project. Failure for Client to notify Architect of any known errors or omissions in the plans or specifications, and proceeding with constructing the portion of work shown in the plans or specifications containing known errors or omissions shall be a waiver by Client for any liability of Architect for such known errors or omissions. Client releases Architect for any liability for such portions of work, and Architect shall not be liable for any delay damages, change orders, repair costs, removal or demolition costs, or replacement of any such portions of work.

2026-05-26, ISSUED FOR BID

Sheet Name
ENERGY COMPLIANCE

EN1-12

STATE OF CALIFORNIA
Envelope Component Approach
CALIFORNIA ENERGY COMMISSION

CERTIFICATE OF COMPLIANCE		NRCC-ENV-E
Project Name: Sovovatum Village QSR Vanilla Shell	Report Page:	(Page 14 of 15)
	Date Prepared:	5/22/2026

M. DECLARATION OF REQUIRED CERTIFICATES OF INSTALLATION
Selections have been made based on information provided in this document. If any selection have been changed by the permit applicant, an explanation should be included in Table E Additional Remarks. These documents must be provided to the building inspector during construction and can be found online

Form/Title
NRCI-ENV-E - Must be submitted for all buildings

N. DECLARATION OF REQUIRED CERTIFICATES OF ACCEPTANCE
Selections have been made based on information provided in previous tables of this document. If any selection needs to be changed, form user must provide an explanation in Table E Additional Remarks. These documents must be provided to the building inspector during construction and can be found online at https://www.energy.ca.gov/programs-and-topics/programs/building-energy-efficiency-standards/2025-building-energy-efficiency-4. Individuals who perform the field testing and verification work, and provide the information required for completion of the fenestration Certificate of Acceptance documentation are not required to be licensed professionals. However, the person who signs the Certificate of Acceptance document to certify compliance with the acceptance requirements shall be licensed as specified in Standards Section 10-103(a)4 and NA7.3.1

Form/Title	Systems/Spaces To Be Field Verified
NRCA-ENV-02-F must be submitted for all new, added or altered site built fenestration.	Fenestration;

O. DECLARATION OF REQUIRED CERTIFICATES OF VERIFICATION
There are no forms required for this project.

STATE OF CALIFORNIA
Envelope Component Approach
CALIFORNIA ENERGY COMMISSION

CERTIFICATE OF COMPLIANCE		NRCC-ENV-E
Project Name: Sovovatum Village QSR Vanilla Shell	Report Page:	(Page 15 of 15)
Project Address: Soboba Sovovatum Village	Date Prepared:	5/22/2026

DOCUMENTATION AUTHOR'S DECLARATION STATEMENT
I certify that this Certificate of Compliance documentation is accurate and complete.

Documentation Author Name: Gregory Schnackel, P.E.	Documentation Author Signature:
Company: Schnackel Engineers, Inc.	Signature Date: 2026-05-22
Address: 3035 South 72nd Street	CEA/AEA/ECC Certification Identification (if applicable): E-14631, M-33299
City/State/Zip: Omaha NE 68124	Phone: (402) 391-7680

RESPONSIBLE PERSON'S DECLARATION STATEMENT
I certify the following under penalty of perjury, under the laws of the State of California:
1. The information provided on this Certificate of Compliance is true and correct.
2. I am eligible under Division 3 of the Business and Professions Code to accept responsibility for the building design or system design identified on this Certificate of Compliance (responsible designer)
3. The energy features and performance specifications, materials, components, and manufactured devices for the building design or system design identified on this Certificate of Compliance conform to the requirements of Title 24, Part 1 and Part 6 of the California Code of Regulations.
4. The building design features or system design features identified on this Certificate of Compliance are consistent with the information provided on other applicable compliance documents, worksheets, calculations, plans and specifications submitted to the enforcement agency for approval with this building permit application.
5. I will ensure that a completed signed copy of this Certificate of Compliance shall be made available with the building permit(s) issued for the building, and made available to the enforcement agency for all applicable inspections. I understand that a completed signed copy of this Certificate of Compliance is required to be included with the documentation the builder provides to the building owner at occupancy.

Responsible Person Name:	Responsible Person Signature:
Responsible Person Scope:	
Company:	Date Signed: 2026-05-22
Address:	License:
City/State/Zip:	Phone:

STATE OF CALIFORNIA
Indoor Lighting
CALIFORNIA ENERGY COMMISSION

CERTIFICATE OF COMPLIANCE		NRCC-LTI-E
This document is used to demonstrate compliance with requirements in §110.9, §110.12(c), §130.0, §130.1, §140.6 and §141.0(b)2 for indoor lighting scopes using the prescriptive path for nonresidential and hotel/motel occupancies. It is also used to document compliance with requirements in §160.5, §170.2(e) and §180.2(b)4 for indoor lighting scopes using the prescriptive path for multifamily occupancies. Multifamily includes dormitory and senior living facilities.		
Project Name: Sovovatum Village QSR Vanilla Shell	Report Page:	(Page 1 of 9)
Project Address: Soboba Sovovatum Village	Date Prepared:	5/22/2026

A. GENERAL INFORMATION

01	Project Location (city)	San Jacinto	04	Total Conditioned Floor Area (ft^2)	5,239
02	Climate Zone	10	05	Total Unconditioned Floor Area (ft^2)	0
03	Occupancy Types Within Project (select all that apply):		06	# of Stories (Habitable Above Grade)	2

● Financial Institution ● Office ● Retail ● Support Areas ● All Other Occupancies

B. PROJECT SCOPE
This table includes any lighting systems that are within the scope of the permit application and are demonstrating compliance using the prescriptive path outlined in §140.6 / §170.2(e) or §141.0(b)2 / §180.2(b)4 for alterations.

Scope of Work	Conditioned Spaces		Unconditioned Spaces	
01	02	03	04	05
My Project Consists of (check all that apply):	Calculation Method	Area (ft^2)	Calculation Method	Area (ft^2)
☒ New Lighting System	Area Category Method	5239	Area Category Method	0
☐ New Lighting System - Parking Garage				
Total Area of Work (ft^2)	5239		0	

STATE OF CALIFORNIA
Indoor Lighting
CALIFORNIA ENERGY COMMISSION

CERTIFICATE OF COMPLIANCE		NRCC-LTI-E
Project Name: Sovovatum Village QSR Vanilla Shell	Report Page:	(Page 2 of 9)
	Date Prepared:	5/22/2026

C. COMPLIANCE RESULTS
If any cell on this table says "DOES NOT COMPLY" or "COMPLIES with Exceptional Conditions" refer to Table D. for guidance.

Lighting in conditioned and unconditioned spaces must not be combined for compliance per §140.6(b)1 /§170.2(e)	Allowed Lighting Power per §140.6(b) /§170.2(e) (Watts)					Adjusted Lighting Power per §140.6(a) /§170.2(e) (Watts)				Compliance Results
	01	02	03		04	05	06		07	08
	Complete Building §140.6(c)1	Area Category §140.6(c)2 /§170.2(e)4	Area Category Additional §140.6(c)2G / §170.2(e)4Av (+)	=	**Total Allowed** (Watts)	≥ Total Designed (Watts)	Adjustments PAF Lighting Control Credits §140.6(a)2 /§170.2(e)1B (-)	=	**Total Adjusted** (Watts) *Includes Adjustments	**05 must be >= 08 §140.6 /§170.2(e)**
	(See Table I)	(See Table I)	(See Table J)			(See Table F)	(See Table P)			
Conditioned		3,832	0	=	3,832	≥ 2,892	0	=	2892	COMPLIES
Unconditioned				=		≥		=		
Controls Compliance (See Table H for Details)										COMPLIES
One-for-one Luminaire Alterations Compliance (See Table Q for Details)										

D. EXCEPTIONAL CONDITIONS
This table is auto-filled with uneditable comments because of selections made or data entered in tables throughout the form.

E. ADDITIONAL REMARKS
This table includes remarks made by the permit applicant to the Authority Having Jurisdiction.

STATE OF CALIFORNIA
Indoor Lighting
CALIFORNIA ENERGY COMMISSION

CERTIFICATE OF COMPLIANCE		NRCC-LTI-E
Project Name: Sovovatum Village QSR Vanilla Shell	Report Page:	(Page 3 of 9)
	Date Prepared:	5/22/2026

F. INDOOR LIGHTING FIXTURE SCHEDULE
This table includes all planned permanent and portable lighting other than dwelling unit/ hotel/ motel room lighting. Multifamily dwelling unit and hotel/motel room lighting is documented in Table T. If using Table T to document lighting in multifamily common use areas providing shared provisions for living, eating, cooking or sanitation, those luminaires are not included here.

Designed Wattage: Conditioned Spaces

01	02	03	04	05	06	07	08	09	10	
Name or Item Tag	Complete Luminaire Description	Modular (Track) Fixture	Small Aperture & Color Change [1]	Watts per luminaire[2]	How is Wattage determined	Total Number of Luminaires	Excluded per §140.6(a)3 / §170.2(e)2C	Design Watts	Field Inspector Pass	Fail
A	LED 2x2 Panel - A	No	NA	34	Mfr. Spec	55	No	1,870	☐	☐
AE	LED 2x2 Panel w/EM - AE	No	NA	34	Mfr. Spec	21	No	714	☐	☐
C	LED Downlight - C	No	NA	10	Mfr. Spec	3	No	30	☐	☐
CE	LED Linear w/EM - CE	No	NA	10	Mfr. Spec	6	No	60	☐	☐
FL	LED Linear - FL	No	NA	34	Mfr. Spec	5	No	170	☐	☐
L1	LED Linear - L1	No	NA	24	Mfr. Spec	2	No	48	☐	☐
Total Designed Watts: CONDITIONED SPACES								2,892		

[1]*FOOTNOTE: Design Watts for small aperture and color changing luminaires which qualify per §140.6(a)4B /§170.2(e)2D is adjusted to be 75% /80% of their rated wattage. Table F automatically makes this adjustment, the permit applicant should enter full rated wattage in column 05.*

[2]*Authority Having Jurisdiction may ask for Luminaire cut sheets to confirm wattage used for compliance per §130.0(c) /§160.5(b). Wattage used must be the maximum rated for the luminaire, not the lamp.*

G. MODULAR LIGHTING SYSTEMS
This section does not apply to this project.

STATE OF CALIFORNIA
Indoor Lighting
CALIFORNIA ENERGY COMMISSION

CERTIFICATE OF COMPLIANCE		NRCC-LTI-E
Project Name: Sovovatum Village QSR Vanilla Shell	Report Page:	(Page 4 of 9)
	Date Prepared:	5/22/2026

H. INDOOR LIGHTING CONTROLS (Not including PAFs)
This table includes lighting controls for conditioned and unconditioned spaces.

Building Level Controls

01	02	03	
Mandatory Demand Response §110.12(c)	Shut-off controls §130.1(c) / §160.5(b)4C	Field Inspector Pass	Fail
NA < 4,000W subject to multilevel	Whole Building Auto Time Switch	☐	☐

Area Level Controls

04	05	06	07	08	09	10	11	12	
Area Description	Complete Building or Area Category Primary Function Area	Manual Controls §130.1(a) /§160.5(b)4A	Multi-Level Controls §130.1(b) /§160.5(b)4B	Shut-Off Controls §130.1(c) //§160.5(b)4C	Primary/Skylit Daylighting §130.1(d) /§160.5(b)4D	Secondary Daylighting §130.1(d) /§160.5(b)4D	Interlocked Systems §140.6(a)1/ §170.2(e)2A	Field Inspector Pass	Fail
GAMING	Retail Merchandise Sales	Readily Accessible and located in the same space.	Multilevel Switch	(Shut-off control requirements are met at the building level)	NA: Sidelit retail sales area	NA: Sidelit retail sales area	No	☐	☐
LOBBY	Main Entry Lobby	Readily Accessible and located in the same space.	Multilevel Switch	Occupancy Sensor	NA: Rm < 24sf Glazing	NA: Rm < 24sf Glazing	No	☐	☐
CASHIER	Financial Transaction	Readily Accessible and located in the same space.	Dimmer	Occupancy Sensor	NA: Rm < 24sf Glazing	NA: Rm < 24sf Glazing	No	☐	☐
RR	Restroom	Readily Accessible and located in the same space.	NA: Restrooms	Occupancy Sensor	NA: Rm < 24sf Glazing	NA: Rm < 24sf Glazing	No	☐	☐

STATE OF CALIFORNIA
Indoor Lighting
CALIFORNIA ENERGY COMMISSION

CERTIFICATE OF COMPLIANCE		NRCC-LTI-E
Project Name: Sovovatum Village QSR Vanilla Shell	Report Page:	(Page 5 of 9)
	Date Prepared:	5/22/2026

H. INDOOR LIGHTING CONTROLS (Not including PAFs)

ELEC	Electrical, Mechanical, or Telephone Room	Readily Accessible and located in the same space.	Multilevel Switch	Occupancy Sensor	NA: Rm < 24sf Glazing	NA: Rm < 24sf Glazing	No	☐	☐
OFFICE	Office (>250 square feet)	Readily Accessible and located in the same space.	Dimmer	Occupancy Sensor	NA: Rm < 24sf Glazing	NA: Rm < 24sf Glazing	No	☐	☐
CONFERENCE	Convention, Conference, Multipurpose and Meeting Center	Readily Accessible and located in the same space.	Dimmer	Occupancy Sensor	NA: Rm < 24sf Glazing	NA: Rm < 24sf Glazing	No	☐	☐
CLOSET	All Other Space Types	Readily Accessible and located in the same space.	Multilevel Switch	Occupancy Sensor	NA: Rm < 24sf Glazing	NA: Rm < 24sf Glazing	No	☐	☐
BREAK AREA	Lounge	Readily Accessible and located in the same space.	Dimmer	Occupancy Sensor	NA: Rm < 24sf Glazing	NA: Rm < 24sf Glazing	No	☐	☐
13									
Plan Sheet Showing Daylit Zones:									
E- Sheets									

I. LIGHTING POWER ALLOWANCE: COMPLETE BUILDING OR AREA CATEGORY METHODS
Each area complying using the Complete Building or Area Category Methods per §140.6(b) are included in this table. Column 06 indicates if additional lighting power allowances per §140.6(c) or adjustments per §140.6(a) are being used .

Conditioned Spaces

01	02	03	04	05	06

STATE OF CALIFORNIA
Indoor Lighting
CALIFORNIA ENERGY COMMISSION

CERTIFICATE OF COMPLIANCE		NRCC-LTI-E
Project Name: Sovovatum Village QSR Vanilla Shell	Report Page:	(Page 6 of 9)
	Date Prepared:	5/22/2026

I. LIGHTING POWER ALLOWANCE: COMPLETE BUILDING OR AREA CATEGORY METHODS

Area Description	Complete Building or Area Category Primary Function Area	Allowed Density (W/ft^2)	Area (ft^2)	Allowed Wattage (Watts)	Additional Allowance / Adjustment Area CategoryPAF	PAF
RETAIL SALES AREA - RETAIL MERCHANDISE SALES	Retail Merchandise Sales	0.95	1,719	1,633	No	No
LOBBY	Main Entry Lobby	0.7	253	177.1	No	No
ELECTRICAL, MECHANICAL, TELEPHONE ROOMS	Electrical, Mechanical, or Telephone Room	0.4	119	47.6	No	No
OFFICE AREA - LTE 250 SQUARE FEET	Office (<=250 square feet)	0.65	256	166.4	No	No
LOUNGE, BREAKROOM, OR WAITING AREA	Lounge	0.55	1,400	770	No	No
STORAGE, COMMERCIAL/INDUSTRIAL, WAREHOUSE	All Other Space Types	0.4	50	20	No	No
RESTROOM_2	Restroom	0.65	173	112.4	No	No
CONVENTION, CONFERENCE, MULTIPURPOSE AND MEETING AREA	Convention, Conference, Multipurpose and Meeting Center	0.75	721	540.8	No	No
FINANCIAL TRANSACTION AREA	Financial Transaction	0.7	171	119.7	No	No
RESTROOM_1	Restroom	0.65	377	245	No	No
		TOTALS:	5,239	3,832	See Tables J, or P for detail	

J. ADDITIONAL ALLOWANCE: AREA CATEGORY METHOD QUALIFYING LIGHTING SYSTEM
This section does not apply to this project.

P. POWER ADJUSTMENT: LIGHTING CONTROL CREDIT (POWER ADJUSTMENT FACTOR (PAF))
This section does not apply to this project.

STATE OF CALIFORNIA
Indoor Lighting
CALIFORNIA ENERGY COMMISSION

CERTIFICATE OF COMPLIANCE		NRCC-LTI-E
Project Name: Sovovatum Village QSR Vanilla Shell	Report Page:	(Page 7 of 9)
	Date Prepared:	5/22/2026

Q. ONE-FOR-ONE LUMINAIRE ALTERATIONS
This section does not apply to this project.

R. 80% LIGHTING POWER FOR ALL ALTERATIONS - CONTROLS EXCEPTIONS
This section does not apply to this project.

S. DAYLIGHT DESIGN POWER ADJUSTMENT FACTOR (PAF)
This section does not apply to this project.

T. DWELLING UNIT LIGHTING
This section does not apply to this project.

U. DECLARATION OF REQUIRED CERTIFICATES OF INSTALLATION
Selections have been made based on information provided in this document. If any selections have been changed by permit applicant, an explanation should be included in Table E. Additional Remarks. These documents must be provided to the building inspector during construction and can be found online

Form/Title
NRCI-LTI-E - Must be submitted for all buildings

ktgy
17911 Von Karman Ave.
Suite 200
Irvine, CA 92614
ktgy.com
949.851.2133

ktgy Project Number
Contact DORINA WATSON
Email dwatson@ktgy.com
Senior Director DAVID SCHMITZ
Designer RUSSEL ROSALES

Developer
SEDC
23906 SOBOBA ROAD
SAN JACINTO, CA 92581
PHONE: (951) 663-2058

SOBOBA SOVOVATUM VILLAGE PHASE-2
SAN JACINTO, CA

No.	DATE	DESCRIPTION

Client is responsible for notifying architect in writing for any discovered errors or omissions in the plans and specifications during construction of the project. Failure for Client to notify Architect of any known errors or omissions in the plans or specifications, and proceeding with constructing the portion of work shown in the plans or specifications containing known errors or omissions shall be a waiver by Client for any liability of Architect for such known errors or omissions. Client releases Architect for any liability for such portions of work, and Architect shall not be liable for any delay damages, change orders, repair costs, removal or demolition costs, or replacement of any such portions of work.

2026-05-26, ISSUED FOR BID

Sheet Name
ENERGY COMPLIANCE

EN1-13

Schnackel engineers
402-391-0963 www.schnackel.com

SE_KOB#- 250720

COPYRIGHT 2024 KTGY GROUP INC. These plans and specifications are protected by United States copyright law and may not be used, reproduced, distributed, transmitted, displayed, or modified in any way without the prior written consent of KTGY Group, Inc. or the authorized copyright holder or licensee.

STATE OF CALIFORNIA
Indoor Lighting
CALIFORNIA ENERGY COMMISSION

CERTIFICATE OF COMPLIANCE		NRCC-LTI-E
Project Name: Sovovatum Village QSR Vanilla Shell	Report Page:	(Page 8 of 9)
	Date Prepared:	5/22/2026

V. DECLARATION OF REQUIRED CERTIFICATES OF ACCEPTANCE

Selections have been made based on information provided in this document. If any selections have been changed by the permit applicant, an explanation should be included in Table E. Additional Remarks. These documents must be provided to the building inspector during construction and any with "-A" in the form name must be completed through an Acceptance Test Technician Certification Provider (ATTCP). For more information visit: http://www.energy.ca.gov/title24/attcp/providers.html

Form/Title	Systems/Spaces To Be Field Verified
NRCA-LTI-02-A - Must be submitted for occupancy sensors and automatic time switch controls.	Whole Building Time Switch; LOBBY; CASHIER; RR; ELEC; OFFICE; CONFERENCE; CLOSET; BREAK AREA;

STATE OF CALIFORNIA
Indoor Lighting
CALIFORNIA ENERGY COMMISSION

CERTIFICATE OF COMPLIANCE		NRCC-LTI-E
Project Name: Sovovatum Village QSR Vanilla Shell	Report Page:	(Page 9 of 9)
Project Address: Soboba Sovovatum Village	Date Prepared:	5/22/2026

DOCUMENTATION AUTHOR'S DECLARATION STATEMENT

I certify that this Certificate of Compliance documentation is accurate and complete.

Documentation Author Name: Gregory Schnackel, P.E.	Documentation Author Signature:
Company: Schnackel Engineers, Inc.	Signature Date: 2026-05-22
Address: 3035 South 72nd Street	CEA/AEA/ECC Certification Identification (if applicable): E-14631, M-33299
City/State/Zip: Omaha NE 68124	Phone: (402) 391-7680

RESPONSIBLE PERSON'S DECLARATION STATEMENT

I certify the following under penalty of perjury, under the laws of the State of California:

1. The information provided on this Certificate of Compliance is true and correct.
2. I am eligible under Division 3 of the Business and Professions Code to accept responsibility for the building design or system design identified on this Certificate of Compliance (responsible designer)
3. The energy features and performance specifications, materials, components, and manufactured devices for the building design or system design identified on this Certificate of Compliance conform to the requirements of Title 24, Part 1 and Part 6 of the California Code of Regulations.
4. The building design features or system design features identified on this Certificate of Compliance are consistent with the information provided on other applicable compliance documents, worksheets, calculations, plans and specifications submitted to the enforcement agency for approval with this building permit application.
5. I will ensure that a completed signed copy of this Certificate of Compliance shall be made available with the building permit(s) issued for the building, and made available to the enforcement agency for all applicable inspections. I understand that a completed signed copy of this Certificate of Compliance is required to be included with the documentation the builder provides to the building owner at occupancy.

Responsible Person Name: Gregory Schnackel, P.E.	Responsible Person Signature:
Responsible Person Scope:	
Company: Schnackel Engineers, Inc.	Date Signed: 2026-05-22
Address: 3035 South 72nd Street	License: E-14631
City/State/Zip: Omaha Nebraska 68124	Phone: (402) 391-7680

REGISTERED PROFESSIONAL ENGINEER
GREGORY ROY SCHNACKEL
No. E14631
ELECTRICAL
STATE OF CALIFORNIA

STATE OF CALIFORNIA
Outdoor Lighting
CALIFORNIA ENERGY COMMISSION

CERTIFICATE OF COMPLIANCE		NRCC-LTO-E
This document is used to demonstrate compliance with requirements in §110.9, §130.0, §130.2, §140.7, and §141.0(b)2L for outdoor lighting scopes using the prescriptive path for nonresidential and hotel/motel occupancies. It is also used to document compliance with requirements in §160.5, §170.2(e)6, §180.1(a) and §180.2(b)4Bv for outdoor lighting scopes using the prescriptive path for multifamily and mixed-use occupancies. Multifamily includes dormitory and senior living facilities.		
Project Name: Sovovatum Village QSR Vanilla Shell	Report Page:	(Page 1 of 8)
Project Address: Soboba Sovovatum Village	Date Prepared:	5/22/2026

A. GENERAL INFORMATION

01	Project Location (city)	San Jacinto	04 Total Illuminated Hardscape Area (ft^2)	265
02	Climate Zone	10		
03	Outdoor Lighting Zone per Title 24 Part 1	§10.114 or as designated by Authority Having Jurisdiction (AHJ):		
☐ LZ-0: Very Low - Undeveloped Parkland	☒ LZ-2: Moderate - Urban Clusters	☐ LZ-4: High - Must be reviewed by CA Energy Commission for Approval		
☐ LZ-1: Low - Rural Areas	☐ LZ-3: Moderately High - Urban Areas			
05	Occupancy Types within Project			
● Financial Institution ● Office ● Retail ● Support Areas ● All Other Occupancies				

B. PROJECT SCOPE

This table includes outdoor lighting systems that are within the scope of the permit application and are demonstrating compliance using the prescriptive path outlined in §140.7 / §170.2(e)6 or §141.0(b)2L / § 180.2(b)4Bv for alterations.

My Project Consists of:

01	02	
☒ New Lighting System	Must Comply with Allowances from §140.7 / §170.2(e)6	
☐ Altered Lighting System	Is your alteration increasing the connected lighting load (Watts)?	○ Yes ○ No
03	04	05
% of Existing Luminaires Being Altered[1]	Sum Total of Luminaires Being Added or Altered	Calculation Method
☐ < 10% ☐ >= 10% and < 50% ☐ >= 50%		

Please proceed to Table F. Outdoor Lighting Fixture Schedule to define the project's luminaires.

[1] FOOTNOTES: % of Existing Luminaires Being Altered = (Sum Total of Luminaires Being Added or Altered / Existing Luminaires within the Scope of the Permit Application) x 100.

STATE OF CALIFORNIA
Outdoor Lighting
CALIFORNIA ENERGY COMMISSION

CERTIFICATE OF COMPLIANCE		NRCC-LTO-E
Project Name: Sovovatum Village QSR Vanilla Shell	Report Page:	(Page 2 of 8)
	Date Prepared:	5/22/2026

C. COMPLIANCE RESULTS

Results in this table are automatically calculated from data input and calculations in Tables F through N. Note: If any cell on this table says "COMPLIES with Exceptional Conditions" refer to Table D. Exceptional Conditions for guidance or see applicable Table referenced below.

Calculations of Total Allowed Lighting Power (Watts) §140.7 / §170.2(e)6 or §141.0(b)2L / § 180.2(b)4Bv											Compliance Results			
01		02		03		04		05		06		07		08	09
General Hardscape Allowance §140.7(d)1 / §170.2(e)6 (See Table I)	+	Per Application §140.7(d)2 / §170.2(e)6 (See Table J)	+	Sales Frontage §140.7(d)2 (See Table K)	+	Ornamental §140.7(d)2 / §170.2(e)6 (See Table L)	+	Per Specific Area §140.7(d)2 / §170.2(e)6 (See Table M)	OR	Existing Power Allowance §141.0(b)2L / § 180.2(b)4Bv (See Table N)	=	**Total Allowed** (Watts)	≥	**Total Actual** (Watts)	**07 must be >= 08**
217	+	---	+	---	+	---	+	305	OR	---	=	522	≥	475	COMPLIES
Shielding Compliance (See Table G for Details)															N/A
Controls Compliance (See Table H for Details)															Not applicable

D. EXCEPTIONAL CONDITIONS

This table is auto-filled with uneditable comments because of selections made or data entered in tables throughout the form.

E. ADDITIONAL REMARKS

This table includes remarks made by the permit applicant to the Authority Having Jurisdiction.

STATE OF CALIFORNIA
Outdoor Lighting
CALIFORNIA ENERGY COMMISSION

CERTIFICATE OF COMPLIANCE		NRCC-LTO-E
Project Name: Sovovatum Village QSR Vanilla Shell	Report Page:	(Page 3 of 8)
	Date Prepared:	5/22/2026

F. OUTDOOR LIGHTING FIXTURE SCHEDULE

For new or altered lighting systems demonstrating compliance with §140.7 / §170.2(e)6 all new luminaires being installed and any existing luminaires remaining or being moved within the spaces covered by the permit application are included in the Table below. For altered lighting systems using the Existing Power method per §141.0(b)2L only new luminaires being installed and replacement luminaires being installed as part of the project scope are included (ie, existing luminaires remaining or existing luminaires being moved are not included). Outdoor lighting attached to multifamily buildings and controlled from the inside of a dwelling unit are included in Table H. and are not included here. All other multifamily outdoor lighting is included here.

Designed Wattage:

01	02		03	04	05	06	07	08	09	10	
Name or Item Tag	Complete Luminaire Description		Watts per luminaire[1, 2]	How is Wattage determined	Total Number Luminaires[2]	Luminaire Status[3]	Excluded per §140.7(a) / §170.2(e)6A	Design Watts	Cutoff Req. > 6,200 initial lumen output §130.2(b) /§160.5(c)1[4]	Field Inspector Pass	Fail
DW1	LED Sconce - DW1	☐ Linear	20	Mfr. Spec	8	New	☐	160	NA: < 6200 lumens	☐	☐
FD1	LED Downlight - FD1	☐ Linear	25	Mfr. Spec	5	New	☐	125	NA: < 6200 lumens	☐	☐
GD1	LED Downlight - GD1	☐ Linear	14	Mfr. Spec	3	New	☐	42	NA: < 6200 lumens	☐	☐
GD2	LED Downlight - GD2	☐ Linear	14	Mfr. Spec	2	New	☐	28	NA: < 6200 lumens	☐	☐
WD1	LED Sconce - WD1	☐ Linear	30	Mfr. Spec	1	New	☐	30	NA: < 6200 lumens	☐	☐
WD2	LED Sconce - WD2	☐ Linear	30	Mfr. Spec	3	New	☐	90	NA: < 6200 lumens	☐	☐
							Total Design Watts:	475			

* NOTES: Selections with a * require a note in the space below explaining how compliance is achieved.
EX: Luminaire is lighting a statue; EXCEPTION 2 to §130.2(b)

[1]FOOTNOTES: Authority Having Jurisdiction may ask for Luminaire cut sheets to confirm wattage used for compliance per §130.0(c) / §160.5(b)
[2] For linear luminaires, wattage should be indicated as W/lf instead of Watts/luminaire. Total linear feet should be indicated in column 05 instead of number of luminaires.
[3] Select "New",for new luminaires in a new outdoor lighting project, or for added luminaires in an alteration. Select "Altered" for replacement luminaires in an alteration. Select "Existing to Remain" for existing luminaires within the project scope that are not being altered and are remaining. Select "Existing Reinstalled" for existing luminaires which are being removed and reinstalled as part of the project scope.

STATE OF CALIFORNIA
Outdoor Lighting
CALIFORNIA ENERGY COMMISSION

CERTIFICATE OF COMPLIANCE		NRCC-LTO-E
Project Name: Sovovatum Village QSR Vanilla Shell	Report Page:	(Page 4 of 8)
	Date Prepared:	5/22/2026

F. OUTDOOR LIGHTING FIXTURE SCHEDULE

For new or altered lighting systems demonstrating compliance with §140.7 / §170.2(e)6 all new luminaires being installed and any existing luminaires remaining or being moved within the spaces covered by the permit application are included in the Table below. For altered lighting systems using the Existing Power method per §141.0(b)2L only new luminaires being installed and replacement luminaires being installed as part of the project scope are included (ie, existing luminaires remaining or existing luminaires being moved are not included). Outdoor lighting attached to multifamily buildings and controlled from the inside of a dwelling unit are included in Table H. and are not included here. All other multifamily outdoor lighting is included here.

Designed Wattage:

01	02	03	04	05	06	07	08	09	10

[4] Compliance with mandatory shielding requirements is required for luminaires with initial lumen output >= 6,200 unless exempted by §130.2(b)/ §160.5(c)

G. SHIELDING REQUIREMENTS (BUG)

This section does not apply to this project.

H. OUTDOOR LIGHTING CONTROLS

This table demonstrates compliance with controls requirements for all new or altered luminaires installed as part of the permit application. For alteration projects, luminaires which are existing to remain (ie untouched) and luminaires which are removed and reinstalled (wiring only) do not need to be included in this table even if they are within the spaces covered by the permit application.
Outdoor lighting for nonresidential buildings, parking garages and common service areas in multifamily buildings must be documented separately from outdoor lighting attached to multifamily buildings and controlled from the inside of a dwelling unit

Mandatory Controls for Nonresidential Occupancies, Parking Garages & Common Areas in Multifamily Buildings

01	02	03	04	05	
Area Description	Shut-Off §130.2(c)1 / §160.5(c)	Auto-Schedule §130.2(c)2 / §160.5(c)	Motion Sensor §130.2(c)3 / §160.5(c)	Field Inspector Pass	Fail

[1]FOOTNOTE: Text has been abbreviated, please refer to Table 160.5-A to confirm compliance with the specific light source technologies listed.
[2]Authority having jurisdiction may ask for cutsheets or other documentation to confirm compliance of light source.
[3]Recessed luminaires marked for use in fire-rated installations, and recessed luminaires installed in non-insulated ceilings are excepted from ii and iii.

STATE OF CALIFORNIA
Outdoor Lighting
CALIFORNIA ENERGY COMMISSION

CERTIFICATE OF COMPLIANCE		NRCC-LTO-E
Project Name: Sovovatum Village QSR Vanilla Shell	Report Page:	(Page 5 of 8)
	Date Prepared:	5/22/2026

I. LIGHTING POWER ALLOWANCE (per §140.7 /§170.2(e))

This table includes areas using allowance calculations per §140.7 /§170.2(e). General Hardscape Allowance is per Table 140.7-A/Table 170.2-R while "Use it or lose it" Allowances are per Table 140.7-B /Table 170.2-S. Indicate which allowances are being used to expand sections for user input. Luminaires that qualify for one of the "Use it or lose it" allowances shall not qualify for another "Use it or lose it" allowance.
Outdoor lighting attached to multifamily buildings and controlled from the inside of a dwelling unit are included in Table H. and are not included here. All other multifamily outdoor lighting is included here.

01				
☒ General Hardscape Allowance Table I (below)	"Use it or lose it" Allowance (select all that apply) (select all that apply)			
	☐ Per Application Table J	☐ Sales Frontage Table K	☐ Ornamental Table L	☒ Per Specific Area Table M

Calculated General Hardscape Lighting Power Allowance per Table 140.7-A for Nonresidential & Hotel/Motel

02	03	04	05	06	07	08	09
Area Description	Area Wattage Allowance (AWA)			Linear Wattage Allowance (LWA)			Total General AWA + LWA (Watts)
	Illuminated Area (ft^2)	Allowed Density (W/ft^2)	Area Allowance (Watts)	Perimeter Length (lf)	Allowed Density (W/lf)	Linear Allowance (Watts)	
Stairway	265	0.019	5	77	0.2	11.5	17
Initial Wattage Allowance for Entire Site (Watts):							200
Instances of Initial Wattage Allowance (LZ 0 only)[1]							
Total General Hardscape Allowance (Watts):							217

J. LIGHTING ALLOWANCE: PER APPLICATION

This section does not apply to this project.

K. LIGHTING ALLOWANCE: SALES FRONTAGE

This section does not apply to this project.

L. LIGHTING ALLOWANCE: ORNAMENTAL

This section does not apply to this project.

STATE OF CALIFORNIA
Outdoor Lighting
CALIFORNIA ENERGY COMMISSION

CERTIFICATE OF COMPLIANCE		NRCC-LTO-E
Project Name: Sovovatum Village QSR Vanilla Shell	Report Page:	(Page 6 of 8)
	Date Prepared:	5/22/2026

M. LIGHTING ALLOWANCE: PER SPECIFIC AREA

This table includes areas using the wattage allowance per specific area from Table 140.7-B /Table 170.2-S. More than one specific area allowance may be taken in a single project, if applicable. However, multiple specific area allowances may not be taken for the exact same area on the site.

01	02	03	04	05	06	07	08	09	10
		CALCULATED ALLOWANCE (Watts)			DESIGN WATTS				
Area Description	Specific Area Type per Table 140.7-B	Specific Area (ft^2)[1]	Allowed Density (W/ft^2)	Extra Allowance (Watts)	Luminaire Name or Item Tag	Watts per Luminaire	# of Luminaires	Design Watts	Additional Allowance (Watts)
Building Facade	BuildingFacade	7624	0.1	762.4	WD1	30	1	30	305
					DW1	20	4	80	
					FD1	25	5	125	
					GD1	14	3	42	
					GD2	14	2	28	
					Total Design Watts for this Area:			305	
					Total Allowance (Watts) All Areas:				305

[1] FOOTNOTES: See Table 140.7-B /Table 170.2-S for rules for calculating the specific areas (ft^2 for these additional lighting allowances.
[2] For luminaires indicated in Table F as linear, wattage in column 07 is W/lf instead of Watts/luminaire. Total linear feet should be indicated in column 08 instead of number of luminaires.

N. EXISTING CONDITIONS POWER ALLOWANCE (alterations only)

This section does not apply to this project.

STATE OF CALIFORNIA
Outdoor Lighting
CALIFORNIA ENERGY COMMISSION

CERTIFICATE OF COMPLIANCE		NRCC-LTO-E
Project Name: Sovovatum Village QSR Vanilla Shell	Report Page:	(Page 7 of 8)
	Date Prepared:	5/22/2026

O. DECLARATION OF REQUIRED CERTIFICATES OF INSTALLATION

Selections have been made based on information provided in this document. If any selection has been changed by permit applicant, an explanation should be included in Table E. Additional Remarks. These documents must be provided to the building inspector during construction and can be found online

Form/Title
NRCI-LTO-E - Must be submitted for all buildings

P. DECLARATION OF REQUIRED CERTIFICATES OF ACCEPTANCE

There are no NRCA forms required for this project.

SE JOB#: 250720

COPYRIGHT 2024 KTGY GROUP INC. These plans and specifications are protected by United States copyright law and may not be used, reproduced, distributed, transmitted, displayed, or modified in any way without the prior written consent of KTGY Group, Inc. or the authorized copyright holder or licensee.

ktgy
17911 Von Karman Ave.
Suite 200
Irvine, CA 92614
ktgy.com
949.851.2133

ktgy Project Number
Contact DORINA WATSON
Email dwatson@ktgy.com
Senior Director DAVID SCHMITZ
Designer RUSSEL ROSALES

Developer
SEDC
23906 SOBOBA ROAD
SAN JACINTO, CA 92581

PHONE: (951) 663-2058

SOBOBA SOVOVATUM VILLAGE PHASE-2
SAN JACINTO, CA

No.	DATE	DESCRIPTION

Client is responsible for notifying architect in writing for any discovered errors or omissions in the plans and specifications during construction of the project. Failure for Client to notify Architect of any known errors or omissions in the plans or specifications, and proceeding with constructing the portion of work shown in the plans or specifications containing known errors or omissions shall be a waiver by Client for any liability of Architect for such known errors or omissions. Client releases Architect for any liability for such portions of work, and Architect shall not be liable for any delay damages, change orders, repair costs, removal or demolition costs, or replacement of any such portions of work.

2026-05-26, ISSUED FOR BID

Sheet Name
ENERGY COMPLIANCE

EN1-14

Schnackel engineers
Omaha • Los Angeles • Denver • Las Vegas • Dallas • Houston
800-351-6963 www.schnackel.com

STATE OF CALIFORNIA

Outdoor Lighting

CALIFORNIA ENERGY COMMISSION

CERTIFICATE OF COMPLIANCE			**NRCC-LTO-E**
Project Name: Sovovatum Village QSR Vanilla Shell		**Report Page:**	**(Page 8 of 8)**
Project Address:	Soboba Sovovatum Village	**Date Prepared:**	5/22/2026

DOCUMENTATION AUTHOR'S DECLARATION STATEMENT	
I certify that this Certificate of Compliance documentation is accurate and complete.	
Documentation Author Name: Gregory Schnackel, P.E.	Documentation Author Signature: [signature]
Company: Schnackel Engineers, Inc.	Signature Date: 2026-05-22
Address: 3035 South 72nd Street	CEA/AEA/ECC Certification Identification (if applicable): E-14631, M-33299
City/State/Zip: Omaha NE 68124	Phone: (402) 391-7680

RESPONSIBLE PERSON'S DECLARATION STATEMENT

I certify the following under penalty of perjury, under the laws of the State of California:

1. The information provided on this Certificate of Compliance is true and correct.
2. I am eligible under Division 3 of the Business and Professions Code to accept responsibility for the building design or system design identified on this Certificate of Compliance (responsible designer)
3. The energy features and performance specifications, materials, components, and manufactured devices for the building design or system design identified on this Certificate of Compliance conform to the requirements of Title 24, Part 1 and Part 6 of the California Code of Regulations.
4. The building design features or system design features identified on this Certificate of Compliance are consistent with the information provided on other applicable compliance documents, worksheets, calculations, plans and specifications submitted to the enforcement agency for approval with this building permit application.
5. I will ensure that a completed signed copy of this Certificate of Compliance shall be made available with the building permit(s) issued for the building, and made available to the enforcement agency for all applicable inspections. I understand that a completed signed copy of this Certificate of Compliance is required to be included with the documentation the builder provides to the building owner at occupancy.

Responsible Person Name: Gregory Schnackel, P.E.	Responsible Person Signature: [signature]
Responsible Person Scope:	
Company: Schnackel Engineers, Inc.	Date Signed: 2026-05-22
Address: 3035 South 72nd Street	License: E-14631
City/State/Zip: Omaha Nebraska 68124	Phone: (402) 391-7680

REGISTERED PROFESSIONAL ENGINEER GREGORY ROY SCHNACKEL No. E14631 ELECTRICAL STATE OF CALIFORNIA

STATE OF CALIFORNIA

Mechanical Systems

CALIFORNIA ENERGY COMMISSION

CERTIFICATE OF COMPLIANCE			**NRCC-MCH-E**
This document is used to demonstrate compliance for mechanical systems that are within the scope of the permit application and are demonstrating compliance using the prescriptive path outlined in §140.4, or §141.0(b)2 for alterations.			
Project Name: Sovovatum Village QSR Vanilla Shell		**Report Page:**	**(Page 1 of 17)**
Project Address:	Soboba Sovovatum Village	**Date Prepared:**	5/22/2026

A. GENERAL INFORMATION

01	Project Location (city)	San Jacinto	04	Total Conditioned Floor Area	5239
02	Climate Zone	10	05	Total Unconditioned Floor Area	0
03	Occupancy Types Within Project:		06	# of Stories (Habitable Above Grade)	2

● Financial Institution ● Office ● Retail ● Support Areas ● All Other Occupancies

B. PROJECT SCOPE

This table Includes mechanical systems or components that are within the scope of the permit application and are demonstrating compliance using the prescriptive path outlined in §140.4, §170.2(b) or §141.0(b)2 and §180.2(b)2 for alterations.

01	02	03
Air System(s)	Wet System Components	Dry System Components
☒ Heating Air System	☐ Water Economizer	☒ Air Economizer
☒ Cooling Air System	☐ Pumps	☐ Electric Resistance Heat
☒ Ventilation (including DOAS, ERV, HRV systems)	☐ System Piping	☒ Fan Systems
Mechanical Controls	☐ Cooling Towers	☒ Ductwork (existing to remain, altered or new)
	☐ Chillers	
☒ Mechanical Controls (existing to remain, altered or new)	☐ Boilers	☐ Zonal Systems/ Terminal Boxes

STATE OF CALIFORNIA

Mechanical Systems

CALIFORNIA ENERGY COMMISSION

CERTIFICATE OF COMPLIANCE		**NRCC-MCH-E**
Project Name: Sovovatum Village QSR Vanilla Shell	**Report Page:**	**(Page 2 of 17)**
	Date Prepared:	5/22/2026

C. COMPLIANCE RESULTS

Table C will indicate if the project data input into the compliance document is compliant with mechanical requirements. This table is not editable by the user. If this table says "DOES NOT COMPLY" or "COMPLIES with Exceptional Conditions" refer to Table D., or the table indicated as not compliant for guidance.

01		02		03		04		05		06		07		08	09
System Summary §110.1, §110.2, §140.4, §170.2(c), §141.0(b), §180.2(b2)	AND	Pumps §140.4(k), §170.2(c)4I	AND	Fans/Economizers §140.4(c), §140.4(e), §140.4(p), §170.2(c)	AND	System Controls § 110.2, §120.2, §140.4(f), §140.4(r), §170.2(c)	AND	Ventilation §120.1, §160.2	AND	Terminal Box Controls §140.4(d), §170.2(c)4B	AND	Distribution §120.3, §140.4(l), §160.2, §160.3, §141.0(b)2D, §180.2(b)2Bi i	AND	Cooling Towers §110.2(e)2	Compliance Results
(See Table F)		(See Table G)		(See Table H)		(See Table I)		(See Table J)		(See Table K)		(See Table L)		(See Table M)	
Yes	AND		AND	Yes	AND	Yes	AND	Yes	AND		AND	Yes	AND		COMPLIES
Mandatory Measures Compliance (See Table Q for Details)										COMPLIES					

D. EXCEPTIONAL CONDITIONS

This table is auto-filled with uneditable comments because of selections made or data entered in tables throughout the form.

E. ADDITIONAL REMARKS

This table includes remarks made by the permit applicant to the Authority Having Jurisdiction.

F. HVAC SYSTEM SUMMARY (DRY & WET SYSTEMS)

Space Conditioning System Information

01	02	03	04	05	06
System Name	Quantity	System Serving	System Status	Space Type	Utilizing Recovered Heat
RHP-1	1	Single zone	New	All Other Occupancies	☐
RHP-2	1	Single zone	New	All Other Occupancies	☐

STATE OF CALIFORNIA

Mechanical Systems

CALIFORNIA ENERGY COMMISSION

CERTIFICATE OF COMPLIANCE		**NRCC-MCH-E**
Project Name: Sovovatum Village QSR Vanilla Shell	**Report Page:**	**(Page 3 of 17)**
	Date Prepared:	5/22/2026

F. HVAC SYSTEM SUMMARY (DRY & WET SYSTEMS)

Dry System Equipment Sizing (includes air conditioners, condensers, heat pumps, VRF, furnaces and unit heaters and DOAS systems)

01	02	03	04	05	06	07	08	09	10	11
				Equipment Sizing per Mechanical Schedule (kBtu/h) §140.4(a&b), §170.2(c)1 & §170.2(c)2						
				Heating Output [2,3]			Cooling Output [2,3]		Load Calculations [3,4]	
Name or Item Tag	Equipment Category per Tables 110.2, §140.4(a)2 and 170.2(c)3aii	Equipment Type per Tables 110.2 and Title 20	Smallest Size Available [1] §140.4(a) and §170.2(c)1	Per Design (kBtu/h)	Rated (kBtu/h)	Supp. Heating Output (kBtu/h)	Sensible Per Design (kBtu/h)	Rated (kBtu/h)	Total Heating Load (kBtu/h)	Total Sensible Cooling Load (kBtu/h)
RHP-1	Unitary Heat Pumps	Air-cooled, split (3 phase)	NA: Load Controls	75.27	143.4	0	176.93	193.8	236.56	262.97
RHP-2	Unitary Heat Pumps	Air-cooled, split (3 phase)	NA: Load Controls	37.48	71.4	0	67.84	90.3	6.66	111.94

[1]FOOTNOTES: Equipment shall be the smallest size, within the available options of the desired equipment line, necessary to meet the design heating and cooling loads of the building per §140.4(a) and §170.2(c)1. Healthcare facilities are excepted.

[2]It is common practice to show rated output capacity on the equipment schedule. Sensible cooling output comes from specification sheet tables.

[3] If equipment is heating only, leave cooling output and load blank. If equipment is cooling only, leave heating output and load blank.

[4] Authority Having Jurisdiction may ask for load calculations used for compliance per §140.4(b) and §170.2(c).

Dry System Equipment Efficiency (other than Package Terminal Air Conditioners (PTAC) and Package Terminal Heat Pumps (PTHP), DX-DOAS and Dual Fuel Heat Pumps)

01	02	03	04	05	06	07	08	09	10
		Heating Mode				Cooling Mode			
Name or Item Tag	Size Category (Btu/h)	Rating Condition (°F)	Efficiency Unit	Minimum Efficiency Required per Tables 110.2 / Title 20	Design Efficiency	Refrigerant Loop Heat Recovery	Efficiency Unit	Minimum Efficiency Required per Tables 110.2 / Title 20	Design Efficiency
RHP-1	>=135,000 and <240,000		COP	3.2	3.4	Not Required	EER	10.6	11.3
							IEER	13.5	13.9
RHP-2	>=65,000 and <135,000		COP	3.4	3.5	Not Required	EER	11	12.7
							IEER	14.1	16.6

STATE OF CALIFORNIA

Mechanical Systems

CALIFORNIA ENERGY COMMISSION

CERTIFICATE OF COMPLIANCE		**NRCC-MCH-E**
Project Name: Sovovatum Village QSR Vanilla Shell	**Report Page:**	**(Page 4 of 17)**
	Date Prepared:	5/22/2026

F. HVAC SYSTEM SUMMARY (DRY & WET SYSTEMS)

Mechanical Heat Recovery§140.4(s)

01	02	03	04	05	06	07
Name or Item Tag	Coincident Peak Cooling Load of All High Load Spaces (kBtu/h)	Design Capacity of All Mechanical Cooling Systems[2] (kBtu/h)	Design Capacity of All Service Water Heating Systems[1] (kBtu/h)	Design Capacity for all space heating systems (kBtu/h)	Simultaneous Mechanical Heat Recovery	

[1] FOOTNOTES: Excluding systems expected to operate less than 5 hours per week.

[2] FOOTNOTES: If the design includes capacity for future cooling systems, then assume 20% of future systems serve high load spaces.

G. PUMPS

This section does not apply to this project.

STATE OF CALIFORNIA

Mechanical Systems

CALIFORNIA ENERGY COMMISSION

CERTIFICATE OF COMPLIANCE		**NRCC-MCH-E**
Project Name: Sovovatum Village QSR Vanilla Shell	**Report Page:**	**(Page 5 of 17)**
	Date Prepared:	5/22/2026

H. FAN SYSTEMS & AIR ECONOMIZERS

This table is used to demonstrate compliance with prescriptive requirements found in §140.4(c), §140.4(e), §140.4(m), §170.2(c)3, and §170.2(c)4A for fan systems. Fan systems serving only process loads are exempt from these requirements and do not need to be included in Table H.

System Name	RHP-1	Quantity	1	Fan System Status	New	System Zoning	all other systems	Serving Dwelling Units?	Not Serving Dwelling Units	Fan System Airflow (cfm)	6,000	Site Elevation	1,535	Economizer	Differential Temperature

01	02	03	04	05	06	07	08	09	10	11
						Allowance		Design		
Fan Name or Item Tag	Fan Type	Qty	Component	Airflow through Component (%)	Water Gauge (w.g)	Component Allowance (watt/cfm)	Fan Allowance (watt/cfm)[3]	Design Electrical Input Power Method	Motor Nameplate Horsepower	Fan Electrical Input Power (kW)
SF	Supply	1	BaseAllowanceLTE6Floors	100		0.26		Manufacturer provided		2.43
			MERV 13-16 Filter upstream of thermal conditioning equipment	100		0.12				
			Hydronic/DX cooling coil or heat pump coil	100		0.12				
			Economizer Return Damper	100		0.04				
Supply Fan Base Allowance (watt/cfm)		0.54	Exhuast/Return/Relief/Transfer Fan Base Allowance(watt/cfm)		0	Fan System Allowance (kW)[3]		3.22	Fan System Electrical Input Power (kW)	2.43

STATE OF CALIFORNIA

Mechanical Systems

CALIFORNIA ENERGY COMMISSION

CERTIFICATE OF COMPLIANCE		**NRCC-MCH-E**
Project Name: Sovovatum Village QSR Vanilla Shell	**Report Page:**	**(Page 6 of 17)**
	Date Prepared:	5/22/2026

H. FAN SYSTEMS & AIR ECONOMIZERS

System Name	RHP-2	Quantity	1	Fan System Status	New	System Zoning	all other systems	Serving Dwelling Units?	Not Serving Dwelling Units	Fan System Airflow (cfm)	3,400	Site Elevation	1,535	Economizer	Differential Temperature

01	02	03	04	05	06	07	08	09	10	11
						Allowance		Design		
Fan Name or Item Tag	Fan Type	Qty	Component	Airflow through Component (%)	Water Gauge (w.g)	Component Allowance (watt/cfm)	Fan Allowance (watt/cfm)[3]	Design Electrical Input Power Method	Motor Nameplate Horsepower	Fan Electrical Input Power (kW)
SF	Supply	1	BaseAllowanceLTE6Floors	100		0.23		Manufacturer provided		1.32
			MERV 13-16 Filter upstream of thermal conditioning equipment	100		0.14				
			Hydronic/DX cooling coil or heat pump coil	100		0.14				
			Economizer Return Damper	100		0.05				
Supply Fan Base Allowance (watt/cfm)		0.56	Exhuast/Return/Relief/Transfer Fan Base Allowance(watt/cfm)		0	Fan System Allowance (kW)[3]		1.89	Fan System Electrical Input Power (kW)	1.32

[1] FOOTNOTES: Fans serving spaces with design background noise goals below NC35

[2] Low-turndown single-zone VAV fan system must be capable of and configured to reduce airflow to 50 percent of design airflow and use no more than 30 percent of the design wattage at that airflow. No more than 10 percent of the design load served by the equipment shall have fixed loads.

[3] Fan system allowance includes fan system base allowance.

[4] Filter pressure loss can only be counted once per fan system.

[5] Complex Fan System means a fan system that combines a single cabinet fan system with other supply fans, exhaust fans, or both.

[6] Computer room economizers must meet requirements of §140.9(a) and will be documented on the NRCC-PRC-E document..

STATE OF CALIFORNIA

Mechanical Systems

CALIFORNIA ENERGY COMMISSION

CERTIFICATE OF COMPLIANCE		**NRCC-MCH-E**
Project Name: Sovovatum Village QSR Vanilla Shell	**Report Page:**	**(Page 7 of 17)**
	Date Prepared:	5/22/2026

H. FAN SYSTEMS & AIR ECONOMIZERS

[7] Indoor fans meeting the requirements of 140.4(a)3D shall turn off when there is no demand for heating or cooling in the space. At 66% air flow the power draw shall be no more than 51% of the fan power at full fan speed and at 33% airflow the power draw shall be no more than 12% of the fan power at full fan speed.

H. EXHAUST AIR HEAT RECOVERY 140.4(q), 170.2(c)4O

01	02	03	04	05	06	07	08	09	10	11
Fan System Name	Qty	Hours of Operation per Year	Design Supply Airflow Rate	Outdoor Airflow	% Outdoor Air at Full Design Airflow	Exemptions to Exhaust Air Heat Recovery Requirement per §140.4(q) & §170.2(c)4O	Exhaust Air Heat Recovery §140.4(q) & §170.2(c)4O	Type Of Heat Recovery Rating	Required Recovery Ratio	Energy Recovery Bypass

Fan Energy Index (FEI)

01	02	03
Name or Item Tag	FEI Exception	FEI
RHP-1	None Applies	1
RHP-2	None Applies	1

STATE OF CALIFORNIA

Mechanical Systems

CALIFORNIA ENERGY COMMISSION

CERTIFICATE OF COMPLIANCE		**NRCC-MCH-E**
Project Name: Sovovatum Village QSR Vanilla Shell	**Report Page:**	**(Page 8 of 17)**
	Date Prepared:	5/22/2026

I. SYSTEM CONTROLS

This table is used to demonstrate compliance with mandatory controls in §110.2 and §120.2 and prescriptive controls in §140.4(f) and (n), §170.2(c)4D §170.2(c)4L or requirements in §141.0(b)2E §180.2(b)2 for altered space conditioning systems.

01	02	03	04	05	06	07	08	09	10	11	12
System Name	System Zoning	Conditioned Floor Area Being Served (ft^2)	Thermostats §110.2(b) & (c)[1], §120.2(a) §160.3(a)2A or §160.3(b)8 or §141.0(b)2E & §180.2(b)2	Shut-Off Controls §120.2(e) & §160.3(a)2D	Isolation Zone Controls §120.2(g) & §160.3(a)2F	Demand Response §110.12 §120.2(b) & §160.3(a)2B	Supply Air Temp. Reset §140.4(f) & §170.2(c)4D	Window Interlocks per §140.4(n) & §170.2(c)4D	Direct Digital Control (DDC) per §120.2	JA18 Guideline 36 Library Version	Heat Pump Defrost per §160.3(b)7
RHP-1	Single zone	<= 25,000 ft^2	Setback	Auto Timer Switch	4 Hour Timer	EMCS	NA: Would increase energy use	Provided	NA: Multifamily		Provided
RHP-2	Single zone	<= 25,000 ft^2	Setback	Auto Timer Switch	4 Hour Timer	EMCS	NA: Would increase energy use	Provided	NA: Multifamily		Provided

[1]FOOTNOTES: Gravity gas wall heaters, gravity floor heaters, gravity room heaters, non-central electric heaters, fireplaces or decorative gas appliances, wood stoves are not required to have setback thermostats.

ktgy
17911 Von Karman Ave.
Suite 200
Irvine, CA 92614
ktgy.com
949.851.2133

ktgy Project Number

Contact DORINA WATSON
Email dwatson@ktgy.com
Senior Director DAVID SCHMITZ
Designer RUSSEL ROSALES

Developer
SEDC
23906 SOBOBA ROAD
SAN JACINTO, CA 92581

PHONE: (951) 663-2058

SOBOBA SOVOVATUM VILLAGE PHASE-2

SAN JACINTO, CA

No.	DATE	DESCRIPTION

Client is responsible for notifying architect in writing for any discovered errors or omissions in the plans and specifications during construction of the project. Failure for Client to notify Architect of any known errors or omissions in the plans or specifications, and proceeding with constructing the portion of work shown in the plans or specifications containing known errors or omissions shall be a waiver by Client for any liability of Architect for such known errors or omissions. Client releases Architect for any liability for such portions of work, and Architect shall not be liable for any delay damages, change orders, repair costs, removal or demolition costs, or replacement of any such portions of work.

2026-05-26, ISSUED FOR BID

Sheet Name
ENERGY COMPLIANCE

Schnackel engineers
New York ■ Miami ■ Omaha ■ Los Angeles ■ Seattle ■ Honolulu 800-581-0963 www.schnackel.com

EN1-15

SE JOB#: 250720

COPYRIGHT 2024 KTGY GROUP INC. These plans and specifications are protected by United States copyright law and may not be used, reproduced, distributed, transmitted, displayed, or modified in any way without the prior written consent of KTGY Group, Inc. or the authorized copyright holder or licensee.

STATE OF CALIFORNIA

Mechanical Systems

CALIFORNIA ENERGY COMMISSION

CERTIFICATE OF COMPLIANCE			NRCC-MCH-E
Project Name:	Sovovatum Village QSR Vanilla Shell	**Report Page:**	(Page 9 of 17)
		Date Prepared:	5/22/2026

J. VENTILATION AND INDOOR AIR QUALITY

This table is used to demonstrate compliance with mandatory ventilation requirements in §120.1 § 120.2(e)3B § 140.4(p) and § 140.4(q) for all nonresidential and hotel/motel and d:t24refnolink/]160.2, §160.3(a)3D, §170.2(a)4N, 170.2(a)4O for high-rise residential occupancies. For alterations, only ventilation systems being altered within the scope of the permit application need to be documented in this table. In lieu of this table, the required outdoor ventilation rates and airflows may be shown on the plans or the calculations can be presented in a spreadsheet.

01	☐	Check the box if the project is showing ventilation calculations on the plans, or attaching the calculations instead of completing this table.
02	☒	Check this box if the project included Nonresidential, Hotel/Motel Spaces or Multifamily Common Use Spaces
	☐	
03	☐	Check the box if the project is using natural ventilation in any nonresidential or hotel/motel spaces to meet required ventilation rates per §120.1(c)2.

Nonresidential and Hotel/ Motel Multifamily Common Use Ventilation Systems

04		05		06		07
System Name	RHP-1	System Design OA CFM Airflow[1]	1677	System Design Transfer Air CFM	0	Air Filtration per §120.1(c) §141.0(b)2 and §160.2(c)21 [2]: Provided

08	09	10	11	12	13	14	15	16	
Space Name or Item Tag	Mechanical Ventilation Required per §120.1(c)3[3] & §160.2(c)3					Exh. Vent per §120.1(c)4 & §160.2(c)4		DCV or Sensor Controls per §120.1(d)3, §120.1(d)5, and §120.1(e)3[6] §160.2(c)5D §160.2(c)5E §160.2(c)5D	
	Occupancy Type[4]	Conditioned Floor Area (ft^2)	# of Shower heads/ toilets	# of people [5]	Required Min OA CFM	Required Min CFM	Provided per Design CFM		
RETAIL SALES AREA - RETAIL MERCHANDISE SALES	Retail sales	1719			438.3	0	0	DCV	NA: Not required per §120.1(d)3
								Occ Sensor	NA: Not required space type
LOBBY	Lobbies/pre function	253			125.2	0	0	DCV	NA: Not required per §120.1(d)3
								Occ Sensor	NA: Not required space type

STATE OF CALIFORNIA

Mechanical Systems

CALIFORNIA ENERGY COMMISSION

CERTIFICATE OF COMPLIANCE			NRCC-MCH-E
Project Name:	Sovovatum Village QSR Vanilla Shell	**Report Page:**	(Page 10 of 17)
		Date Prepared:	5/22/2026

J. VENTILATION AND INDOOR AIR QUALITY

ELECTRICAL, MECHANICAL, TELEPHONE ROOMS	All others	119			17.8	0	0	DCV	NA: Not required per §120.1(d)3
								Occ Sensor	NA: Not required space type
OFFICE AREA - LTE 250 SQUARE FEET	Office space	256			38.4	0	0	DCV	NA: Not required per §120.1(d)3
								Occ Sensor	NA: Not required space type
LOUNGE, BREAKROOM, OR WAITING AREA	Break room	1400			693	0	0	DCV	NA: Not required per §120.1(d)3
								Occ Sensor	NA: Not required space type
STORAGE, COMMERCIAL /INDUSTRIAL, WAREHOUSE	All others	50			7.5	0	0	DCV	NA: Not required per §120.1(d)3
								Occ Sensor	NA: Not required space type
RESTROOM_2	Toilet, public	173			0	0	0	DCV	NA: Not required per §120.1(d)3
								Occ Sensor	NA: Not required space type
CONVENTION, CONFERENCE, MULTIPURPOSE AND MEETING AREA	Conference/ meeting	721			356.9	0	0	DCV	NA: Not required per §120.1(d)3
								Occ Sensor	NA: Not required space type
17	Total System Required Min OA CFM				1677	18	Ventilation for this System Complies?		Yes

STATE OF CALIFORNIA

Mechanical Systems

CALIFORNIA ENERGY COMMISSION

CERTIFICATE OF COMPLIANCE			NRCC-MCH-E
Project Name:	Sovovatum Village QSR Vanilla Shell	**Report Page:**	(Page 11 of 17)
		Date Prepared:	5/22/2026

J. VENTILATION AND INDOOR AIR QUALITY

04		05		06		07
System Name	RHP-2	System Design OA CFM Airflow[1]	26	System Design Transfer Air CFM	0	Air Filtration per §120.1(c) §141.0(b)2 and §160.2(c)21 [2]: Provided

08	09	10	11	12	13	14	15	16	
Space Name or Item Tag	Mechanical Ventilation Required per §120.1(c)3[3] & §160.2(c)3					Exh. Vent per §120.1(c)4 & §160.2(c)4		DCV or Sensor Controls per §120.1(d)3, §120.1(d)5, and §120.1(e)3[6] §160.2(c)5D §160.2(c)5E §160.2(c)5D	
	Occupancy Type[4]	Conditioned Floor Area (ft^2)	# of Shower heads/ toilets	# of people [5]	Required Min OA CFM	Required Min CFM	Provided per Design CFM		
FINANCIAL TRANSACTION AREA	Office space	171			25.6	0	0	DCV	NA: Not required per §120.1(d)3
								Occ Sensor	NA: Not required space type
RESTROOM_1	Toilet, public	377			0	0	0	DCV	NA: Not required per §120.1(d)3
								Occ Sensor	NA: Not required space type
17	Total System Required Min OA CFM				26	18	Ventilation for this System Complies?		Yes

[1] FOOTNOTES: System CFM should include both mechanical and natural ventilation for the zone/system

[2] Air filtration requirements apply to the following three system types per §120.1(c)1A: space conditioning systems utilizing ducts to supply air to occupiable space; supply-only ventilation systems providing outside air to occupiable space; supply side of balanced ventilation systems including heat recovery and energy recovery ventilation systems providing outside air to occupiable space.

[3] Uniform Mechanical Code may have more stringent ventilation requirements; the most stringent code requirement takes precedence.

[4] See Standards Tables 120.1-A and 120.1-B.

[5] For lecture halls with fixed seating, the expected number of occupants shall be determined in accordance with the California Building Code.

[6]§Upon detection of sensor failure, the system shall provide a signal which resets to supply the minimum quantity of outside air to levels required by Section 120.1(c)3.

STATE OF CALIFORNIA

Mechanical Systems

CALIFORNIA ENERGY COMMISSION

CERTIFICATE OF COMPLIANCE			NRCC-MCH-E
Project Name:	Sovovatum Village QSR Vanilla Shell	**Report Page:**	(Page 12 of 17)
		Date Prepared:	5/22/2026

K. TERMINAL BOX CONTROLS

This section does not apply to this project.

L. DISTRIBUTION (DUCTWORK and PIPING)

This table is used to show compliance with mandatory pipe insulation requirements found in §120.3 and mandatory requirements found in §120.4(g) for duct sealing.

01	☐	Insulation shall be protected from damage, including that due to sunlight, moisture, equipment maintenance, and wind. Insulation exposed to weather shall be installed with a cover suitable for outdoor service. Insulation covering chilled water piping and refrigerant suction piping located outside the conditioned space shall have a Class I or Class II vapor retarder. All penetrations and joints of which shall be sealed.

Duct Leakage Testing

The answers to the questions below apply to the following duct systems:	RHP-1	**NR/ Common Use:** Duct leakage testing shall not exceed 6% per NA7.5.3 required for these systems?	No

STATE OF CALIFORNIA

Mechanical Systems

CALIFORNIA ENERGY COMMISSION

CERTIFICATE OF COMPLIANCE			NRCC-MCH-E
Project Name:	Sovovatum Village QSR Vanilla Shell	**Report Page:**	(Page 13 of 17)
		Date Prepared:	5/22/2026

L. DISTRIBUTION (DUCTWORK and PIPING)

		Dwelling Units: Total duct leakage of duct system shall not exceed 12% or duct system to outside shall not exceed 6% per RA3.1.4 required for systems?	No
		Duct leakage testing per CMC Section 603.9.2 required for these systems?	Yes
11	No	The scope of the project includes only duct systems serving healthcare facilities	
12	Yes	Duct system provides conditioned air to an occupiable space for a constant volume, single zone, space-conditioning system.	
13	Yes	The space conditioning system serves less than 5,000 ft^2 of conditioned floor area.	
14	No	The combined surface area of the ducts is more than 25% of the total surface area of the entire duct system:	
15		The scope of the project includes extending an existing duct system, which is constructed, insulated or sealed with asbestos.	
16	No	The scope of the project includes an existing duct system that is documented to have been previously sealed as confirmed through field verification and diagnostic testing in accordance with procedures in the Reference Nonresidential Appendix NA2.	
17	Yes	All Ductwork and plenums with pressure class ratings shall be constructed to Seal Class A	
18		All ductwork is an extension of an existing duct system	
19		Ductwork serving individual dwelling unit	
20		< 25 ft of new or replacement space conditioning ducts installed	
21	R-8	Duct Insulation R-value	
22		Ductwork Existing To Remain	
23		Duct System Connected To Altered Space Conditioning System	

The answers to the questions below apply to the following duct systems:	RHP-2	**NR/ Common Use:** Duct leakage testing shall not exceed 6% per NA7.5.3 required for these systems?	No

STATE OF CALIFORNIA

Mechanical Systems

CALIFORNIA ENERGY COMMISSION

CERTIFICATE OF COMPLIANCE			NRCC-MCH-E
Project Name:	Sovovatum Village QSR Vanilla Shell	**Report Page:**	(Page 14 of 17)
		Date Prepared:	5/22/2026

L. DISTRIBUTION (DUCTWORK and PIPING)

		Dwelling Units: Total duct leakage of duct system shall not exceed 12% or duct system to outside shall not exceed 6% per RA3.1.4 required for systems?	No
		Duct leakage testing per CMC Section 603.9.2 required for these systems?	Yes
11	No	The scope of the project includes only duct systems serving healthcare facilities	
12	Yes	Duct system provides conditioned air to an occupiable space for a constant volume, single zone, space-conditioning system.	
13	Yes	The space conditioning system serves less than 5,000 ft^2 of conditioned floor area.	
14	No	The combined surface area of the ducts is more than 25% of the total surface area of the entire duct system:	
15		The scope of the project includes extending an existing duct system, which is constructed, insulated or sealed with asbestos.	
16	No	The scope of the project includes an existing duct system that is documented to have been previously sealed as confirmed through field verification and diagnostic testing in accordance with procedures in the Reference Nonresidential Appendix NA2.	
17	Yes	All Ductwork and plenums with pressure class ratings shall be constructed to Seal Class A	
18		All ductwork is an extension of an existing duct system	
19		Ductwork serving individual dwelling unit	
20		< 25 ft of new or replacement space conditioning ducts installed	
21	R-8	Duct Insulation R-value	
22		Ductwork Existing To Remain	
23		Duct System Connected To Altered Space Conditioning System	

M. COOLING TOWERS

This section does not apply to this project.

STATE OF CALIFORNIA

Mechanical Systems

CALIFORNIA ENERGY COMMISSION

CERTIFICATE OF COMPLIANCE			NRCC-MCH-E
Project Name:	Sovovatum Village QSR Vanilla Shell	**Report Page:**	(Page 15 of 17)
		Date Prepared:	5/22/2026

N. DECLARATION OF REQUIRED CERTIFICATES OF INSTALLATION

Selections have been made based on information provided in previous tables of this document. If any selection needs to be changed, please explain why in Table E Additional Remarks. These documents must be provided to the building inspector during construction and can be found online at https://www.energy.ca.gov/programs-and-topics/programs/building-energy-efficiency-standards/2022-building-energy-efficiency-4

Form/Title
NRCI-MCH-E - Must be submitted for all buildings

O. DECLARATION OF REQUIRED CERTIFICATES OF ACCEPTANCE

Selections have been made based on information provided in previous tables of this document. If any selection needs to be changed, please explain why in Table E Additional Remarks. These documents must be provided to the building inspector during construction and can be found online at https://www.energy.ca.gov/programs-and-topics/programs/building-energy-efficiency-standards/2022-building-energy-efficiency-4

Form/Title	Systems/Spaces To Be Field Verified
NRCA-MCH-02-A - Outdoor Air	AAON RNA016CA8; AAON RNA009BA8;
NRCA-MCH-03-A - HVAC and Heat Pumps - Const Volume Single Zone HVAC	AAON RNA016CA8; AAON RNA009BA8;
NRCA-MCH-05-A - Air Economizer, DOAS, HRV, & ERV Controls	AAON RNA016CA8; AAON RNA009BA8;
NRCA-MCH-11-A Automatic Demand Shed Controls	AAON RNA016CA8; AAON RNA009BA8;
NRCA-MCH-12-A FDD - Packaged Units	AAON RNA016CA8; AAON RNA009BA8;
NRCA-MCH-18-A Energy Management Control Systems	AAON RNA016CA8; AAON RNA009BA8;

P. DECLARATION OF REQUIRED CERTIFICATES OF VERIFICATION

There are no NRCV forms required for this project.

STATE OF CALIFORNIA

Mechanical Systems

CALIFORNIA ENERGY COMMISSION

CERTIFICATE OF COMPLIANCE			NRCC-MCH-E
Project Name:	Sovovatum Village QSR Vanilla Shell	**Report Page:**	(Page 16 of 17)
		Date Prepared:	5/22/2026

Q. MANDATORY MEASURES DOCUMENTATION LOCATION

This table is used to indicate where mandatory measures are documented in the plan set or construction documentation.

01		02
Compliance with Mandatory Measures documented through MCH Mandatory Measures Note Block	Yes	Plan sheet or construction document location: M-Sheets

STATE OF CALIFORNIA

Mechanical Systems

CALIFORNIA ENERGY COMMISSION

CERTIFICATE OF COMPLIANCE			NRCC-MCH-E
Project Name:	Sovovatum Village QSR Vanilla Shell	**Report Page:**	(Page 17 of 17)
Project Address:	Soboba Sovovatum Village	**Date Prepared:**	5/22/2026

DOCUMENTATION AUTHOR'S DECLARATION STATEMENT

I certify that this Certificate of Compliance documentation is accurate and complete.

Documentation Author Name: Gregory Schnackel, P.E.	Documentation Author Signature:
Company: Schnackel Engineers, Inc.	Signature Date: 2026-05-22
Address: 3035 South 72nd Street	CEA/AEA/ECC Certification Identification (if applicable): E-14631, M-33299
City/State/Zip: Omaha NE 68124	Phone: (402) 391-7680

RESPONSIBLE PERSON'S DECLARATION STATEMENT

I certify the following under penalty of perjury, under the laws of the State of California:

1. The information provided on this Certificate of Compliance is true and correct.
2. I am eligible under Division 3 of the Business and Professions Code to accept responsibility for the building design or system design identified on this Certificate of Compliance (responsible designer)
3. The energy features and performance specifications, materials, components, and manufactured devices for the building design or system design identified on this Certificate of Compliance conform to the requirements of Title 24, Part 1 and Part 6 of the California Code of Regulations.
4. The building design features or system design features identified on this Certificate of Compliance are consistent with the information provided on other applicable compliance documents, worksheets, calculations, plans and specifications submitted to the enforcement agency for approval with this building permit application.
5. I will ensure that a completed signed copy of this Certificate of Compliance shall be made available with the building permit(s) issued for the building, and made available to the enforcement agency for all applicable inspections. I understand that a completed signed copy of this Certificate of Compliance is required to be included with the documentation the builder provides to the building owner at occupancy.

Responsible Person Name: Gregory Schnackel, P.E.	Responsible Person Signature:
Responsible Person Scope:	
Company: Schnackel Engineers, Inc.	Date Signed: 2026-05-22
Address: 3035 South 72nd Street	License: M-33299
City/State/Zip: Omaha Nebraska 68124	Phone: (402) 391-7680

REGISTERED PROFESSIONAL ENGINEER GREGORY ROY SCHNACKEL No.M 33299 MECHANICAL STATE OF CALIFORNIA

Schnackel engineers

New York ■ Miami ■ Omaha ■ Los Angeles ■ Seattle ■ Honolulu 800-581-0963 www.schnackel.com

ktgy

17911 Von Karman Ave.
Suite 200
Irvine, CA 92614
ktgy.com
949.851.2133

ktgy Project Number

Contact DORINA WATSON
Email dwatson@ktgy.com
Senior Director DAVID SCHMITZ
Designer RUSSEL ROSALES

Developer
SEDC
23906 SOBOBA ROAD
SAN JACINTO, CA 92581

PHONE: (951) 663-2058

SOBOBA SOVOVATUM VILLAGE PHASE-2

\- SAN JACINTO, CA

No.	DATE	DESCRIPTION

Client is responsible for notifying architect in writing for any discovered errors or omissions in the plans and specifications during construction of the project. Failure for Client to notify Architect of any known errors or omissions in the plans or specifications, and proceeding with constructing the portion of work shown in the plans or specifications containing known errors or omissions shall be a waiver by Client for any liability of Architect for such known errors or omissions. Client releases Architect for any liability for such portions of work, and Architect shall not be liable for any delay damages, change orders, repair costs, removal or demolition costs, or replacement of any such portions of work.

2026-05-26, ISSUED FOR BID

Sheet Name
ENERGY COMPLIANCE

EN1-16

SE JOB#: 250720

COPYRIGHT 2024 KTGY GROUP INC. These plans and specifications are protected by United States copyright law and may not be used, reproduced, distributed, transmitted, displayed, or modified in any way without the prior written consent of KTGY Group, Inc. or the authorized copyright holder or licensee.

STATE OF CALIFORNIA

Domestic Water Heating System

CALIFORNIA ENERGY COMMISSION

CERTIFICATE OF COMPLIANCE			NRCC-PLB-E
This document is used to demonstrate compliance for nonresidential occupancies with requirements in §110.1, §110.3, §120.3, and §140.5, and with requirements in §141.0 for additions and alterations, for domestic water heating scopes using the prescriptive path. For high-rise residential and hotel/motel occupancies compliance is demonstrated with requirements in §110.1, §110.3, §160.4 and §170.2(d), and with requirements §180.1 for additions and §180.2 for alterations.			
Project Name:	Sovovatum Village QSR Vanilla Shell	**Report Page:**	**(Page 1 of 6)**
Project Address:	Soboba Sovovatum Village	**Date Prepared:**	5/22/2026

A. GENERAL INFORMATION

01	Project Location (city)	San Jacinto	02	Climate Zone	10
03	Occupancy Types Within Project (select all that apply):				
● Financial Institution ● Office ● Retail ● Support Areas ● All Other Occupancies					

B. PROJECT SCOPE

This table includes domestic water heating systems that are within the scope of the permit application and are demonstrating compliance using the prescriptive paths outlined in §140./ §170.2(d) and §141.0(a)/§180.1, or §141.0(b)2N / §180.2 for additions or alterations. Solar water heating systems are documented on the NRCC-SAB compliance document. Combined hydronic water heating systems are documented on the NRCC-MCH compliance document.

01	02	03		
My project consists of (check all that apply):	System Type [1,2]	System Components		
☒ New system (DHW system being installed for the first time)	Serving Nonresidential or MF/Hotel/Motel Common use area	☒ Equipment	☒ Distribution	☒ Controls
☐ System Alteration (equipment, distribution or controls)		☐ Equipment	☐ Distribution	☐ Controls

[1]FOOTNOTES: Point of use water heaters, or other non-central systems used to serve nonresidential spaces, are considered individual systems.
[2] Dwelling units refers to hotel/motel guest rooms and units in a multifamily residential occupancy.
[3] DHW systems serving 2 or more dwelling units are considered "Central Systems" for multifamily and hotel/motel occupancies

C. COMPLIANCE RESULTS

Table C will indicate if the project data input into the compliance document is compliant with water heating requirements. If this table says "DOES NOT COMPLY" or "COMPLIES with Exceptional Conditions" refer to Table D. or the table indicated as not compliant for guidance.

01	02	03	04	05
Domestic Hot Water Equipment	Distribution Systems	Controls	Pool/Spa	**Compliance Results**
Table F	Table G	Table H	Table J	
Yes	Yes	Yes		COMPLIES

D. EXCEPTIONAL CONDITIONS

This table is auto-filled with uneditable comments because of selections made or data entered in tables throughout the form.

STATE OF CALIFORNIA

Domestic Water Heating System

CALIFORNIA ENERGY COMMISSION

CERTIFICATE OF COMPLIANCE			NRCC-PLB-E
Project Name:	Sovovatum Village QSR Vanilla Shell	**Report Page:**	**(Page 2 of 6)**
		Date Prepared:	5/22/2026

E. ADDITIONAL REMARKS

This table includes remarks made by the permit applicant to the Authority Having Jurisdiction.

F. DOMESTIC HOT WATER EQUIPMENT

This table is used to demonstrate compliance with mandatory equipment requirements in §110.1 and §110.3. Compliance with prescriptive requirements in §140.5(c) / §170.2(d) must also be demonstrated and with §141.0 / §180.1/ §180.2 for addition and alteration scopes.

Equipment Schedule: Water Heating Efficiency and Standby Loss

01		02		03		04		
System Name	A.O. SMITH DEL-30	Space type	Nonresidential	Exception to §140.5(c)/§170.2(d)2B			Capacity-weighted Average Efficiency %	
05	06	07	08	09	10	11	12	13
Name or Item Tag	Quantity	System Status	Equipment Type	Volume (gal)	Rated Input Capacity (Btu/h)	Rated Efficiency	Minimum Efficiency Required	Maximum Standby Loss
A.O. SMITH DEL-30	1	New/ Addition	Electric Storage	30	15,355	0.96	Must meet Federal Minimum Requirements	Must meet Federal Minimum Requirements

[1]FOOTNOTE: In systems >= 1MMBtu/h with multiple units, gas water heaters with input capacity > 100,000 Btu/h may meet 90% Et requirements via an input capacity-weighted average.
[2]FOOTNOTE: Compliant equipment may be found in the Modernized Appliance Efficiency Database System (MAEDBS) on the Energy Commission website: https://cacertappliances.energy.ca.gov/Pages/Search/AdvancedSearch.aspx

STATE OF CALIFORNIA

Domestic Water Heating System

CALIFORNIA ENERGY COMMISSION

CERTIFICATE OF COMPLIANCE			NRCC-PLB-E
Project Name:	Sovovatum Village QSR Vanilla Shell	**Report Page:**	**(Page 3 of 6)**
		Date Prepared:	5/22/2026

DOMESTIC HOT WATER DISTRIBUTION SYSTEM

This table is used to demonstrate compliance for nonresidential occupancies with distribution requirements in §120.3 and §140.5. For multifamily and hotel/motel occupancies, compliance is demonstrated with requirements §110.3(c), §160.4, §170.2(d).

Mandatory Pipe Insulation All Occupancies - §120.3, §160.4

System Name			
	Yes	Not Applicable	Requirement
16	○	●	For systems serving dwelling units, pipe insulation must meet the minimum insulation requirements in Table 160.4-A (see blow) except: • Piping that penetrates framing members shall not be required to have pipe insulation for the distance of the framing penetration. Piping that penetrates metal framing shall use grommets, plugs, wrapping or other insulating material to assure that no contact is made with the metal framing. Insulation shall abut securely against all framing members • Piping installed in interior or exterior walls shall not be required to have pipe insulation if all of the requirements are met for compliance with Quality Insulation Installation (QII) as specified in the Reference Residential Appendix RA3.5. • Piping surrounded with a minimum of 1 inch of wall insulation, 2 inches of crawlspace insulation, or 4 inches of attic insulation, shall not be required to have pipe insulation.
17	●	○	For systems serving nonresidential spaces, pipe insulation for the following applications is specified to comply with Table 120.3-A1 or Table 120.3-A2 (see below) per §120.3: • Recirculating system piping, including supply and return piping of the water heater • The first 8 ft of hot and cold outlet piping, including between storage tank and heat trap, for a nonrecirculating storage system • Pipes that are externally heated
18	●	○	Per §120.3(b)/ §160.4(f), pipe and appurtenance insulation shall be protected from damage, including that due to sunlight, moisture, equipment maintenance, and wind. Insulation exposed to weather shall be installed with a cover suitable for outdoor service. Pipe insulation buried below grade must be installed in a water proof and non-crushable casing or sleeve.

TABLE 160.4-A PIPE INSULATION THICKNESS

Fluid Temperature Range (°F)	Conductivity Range (Btu-in per hour per ft^2 per °F)	Insulation Mean Rating Temp (°F)	Nominal Pipe Diameter (in)			
			< 1	1 to < 1.5	1.5 to < 4	1.5 to < 4 Multifamily & Hotel/Motel
			Minimum Insulation Required			
105-140	0.22 - 0.28	100	1.0 in or R-7.7	1.5 in or R-12.5	1.5 in or R-11	2.0 in or R-16

STATE OF CALIFORNIA

Domestic Water Heating System

CALIFORNIA ENERGY COMMISSION

CERTIFICATE OF COMPLIANCE			NRCC-PLB-E
Project Name:	Sovovatum Village QSR Vanilla Shell	**Report Page:**	**(Page 4 of 6)**
		Date Prepared:	5/22/2026

DOMESTIC HOT WATER CONTROLS - §110.3, §120.9, §160.4(d), §170.2(d), §180.1(b)3

This table is used to demonstrate compliance with control requirements in §110.3 for all occupancies. For nonresidential occupancies, compliance is demonstrated with requirements in §120.9. For multifamily residential and hotel/motel occupancies, compliance is also demonstrated with requirements in §160.4(d) / §170.2(d).

System Name			
	Yes	Not Applicable	Requirement
01	☒	☐	Construction documents require manufacturer certification that service water-heating systems are equipped with automatic temperature controls capable of adjusting temperature settings per §110.3(a).
02	☐	☒	Systems with capacity > 167,000 BTUH equipped with outlet temperature controls per §110.3(c)1 unless covered by California Plumbing Code 613.0.
03	☐	☒	Controls for circulating pumps or electrical heat trace systems are capable of automatically turning off the system per §110.3(c)2 unless systems serves healthcare facility.
04	☐	☒	For recirculation systems serving multiple dwelling units, design includes a mechanical or digital thermostatic master mixing valve on each distribution supply and return loop per §170.2(d) or §180.1(b)3 for additions.
05	☐	☒	For recirculation systems serving individual dwelling units, design includes manual on/off controls as specified in Reference Appendix RA4.4.9 per §170.2(d).
06	☐	☒	Combustion air positive shut-off shall be provided per §120.9(a) & §160.4(d) on all newly installed commercial boilers as follows: • Boilers with input capacity >= 2.5 MMBtu/h, in which the boiler is designed to operate with a nonpositive vent static pressure • Boilers where one stack serves two or more boilers with a total combined input capacity per stack of 2.5 MMBtu/h.
07	☐	☒	Boiler combustion air fans with motor >= 10 hp shall meet one of the following for newly installed boilers per §120.9(b) & §160.4(d)2: • The fan motor shall be driven by a variable speed drive OR • The fan motor shall include controls that limit the fan motor demand to <=30% of the total design wattage at 50% of the design air volume.
08	☐	☒	Newly installed boilers with an input capacity {d:gte/] 5MMBtu/h and a steady state full-load combustion efficiency < 90% shall maintain excess (stack-gas) oxygen concentrations <= 5% by volume on a dry basis over firing rates of 20-100%. Combustion air volume shall be controlled with respect to firing rate or flue gas oxygen concentration. Use of a common gas and combustion air control linkage or jack shaft is prohibited per §120.9(c) & §160.4(d)3.

STATE OF CALIFORNIA

Domestic Water Heating System

CALIFORNIA ENERGY COMMISSION

CERTIFICATE OF COMPLIANCE			NRCC-PLB-E
Project Name:	Sovovatum Village QSR Vanilla Shell	**Report Page:**	**(Page 5 of 6)**
		Date Prepared:	5/22/2026

DECLARATION OF REQUIRED CERTIFICATES OF INSTALLATION

Selections have been made based on information provided in this document. If any selection have been changed by permit applicant, an explanation should be included in Table E. Additional Remarks. These documents must be provided to the building inspector during construction and can be found online

Form/Title
NRCI-PLB-E - Must be submitted for all buildings

DECLARATION OF REQUIRED CERTIFICATES OF ACCEPTANCE

There are no forms required for this project.

DECLARATION OF REQUIRED CERTIFICATES OF VERIFICATION

There are no forms required for this project.

STATE OF CALIFORNIA

Domestic Water Heating System

CALIFORNIA ENERGY COMMISSION

CERTIFICATE OF COMPLIANCE			NRCC-PLB-E
Project Name:	Sovovatum Village QSR Vanilla Shell	**Report Page:**	**(Page 6 of 6)**
Project Address:	Soboba Sovovatum Village	**Date Prepared:**	5/22/2026

DOCUMENTATION AUTHOR'S DECLARATION STATEMENT

I certify that this Certificate of Compliance documentation is accurate and complete.

Documentation Author Name: Gregory Schnackel, P.E.	Documentation Author Signature:
Company: Schnackel Engineers, Inc.	Signature Date: 2026-05-22
Address: 3035 South 72nd Street	CEA/AEA/ECC Certification Identification (if applicable): E-14631, M-33299
City/State/Zip: Omaha NE 68124	Phone: (402) 391-7680

RESPONSIBLE PERSON'S DECLARATION STATEMENT

I certify the following under penalty of perjury, under the laws of the State of California:

1. The information provided on this Certificate of Compliance is true and correct.
2. I am eligible under Division 3 of the Business and Professions Code to accept responsibility for the building design or system design identified on this Certificate of Compliance (responsible designer)
3. The energy features and performance specifications, materials, components, and manufactured devices for the building design or system design identified on this Certificate of Compliance conform to the requirements of Title 24, Part 1 and Part 6 of the California Code of Regulations.
4. The building design features or system design features identified on this Certificate of Compliance are consistent with the information provided on other applicable compliance documents, worksheets, calculations, plans and specifications submitted to the enforcement agency for approval with this building permit application.
5. I will ensure that a completed signed copy of this Certificate of Compliance shall be made available with the building permit(s) issued for the building, and made available to the enforcement agency for all applicable inspections. I understand that a completed signed copy of this Certificate of Compliance is required to be included with the documentation the builder provides to the building owner at occupancy.

Responsible Person Name: Gregory Schnackel, P.E.	Responsible Person Signature:
Responsible Person Scope:	
Company: Schnackel Engineers, Inc.	Date Signed: 2026-05-22
Address: 3035 South 72nd Street	License: M-33299
City/State/Zip: Omaha Nebraska 68124	Phone: (402) 391-7680

REGISTERED PROFESSIONAL ENGINEER
GREGORY ROY SCHNACKEL
No.M 33299
MECHANICAL
STATE OF CALIFORNIA

Schnackel engineers
New York ■ Miami ■ Omaha ■ Los Angeles ■ Seattle ■ Honolulu
800-581-0963 www.schnackel.com

ktgy
17911 Von Karman Ave.
Suite 200
Irvine, CA 92614
ktgy.com
949.851.2133

ktgy Project Number

Contact	DORINA WATSON
Email	dwatson@ktgy.com
Senior Director	DAVID SCHMITZ
Designer	RUSSEL ROSALES

Developer
SEDC
23906 SOBOBA ROAD
SAN JACINTO, CA 92581

PHONE: (951) 663-2058

SOBOBA SOVOVATUM VILLAGE PHASE-2

- SAN JACINTO, CA

No.	DATE	DESCRIPTION

Client is responsible for notifying architect in writing for any discovered errors or omissions in the plans and specifications during construction of the project. Failure for Client to notify Architect of any known errors or omissions in the plans or specifications, and proceeding with constructing the portion of work shown in the plans or specifications containing known errors or omissions shall be a waiver by Client for any liability of Architect for such known errors or omissions. Client releases Architect for any liability for such portions of work, and Architect shall not be liable for any delay damages, change orders, repair costs, removal or demolition costs, or replacement of any such portions of work.

2026-05-26, ISSUED FOR BID

Sheet Name
ENERGY COMPLIANCE

EN1-17

SE JOB#: 250720

COPYRIGHT 2024 KTGY GROUP INC. These plans and specifications are protected by United States copyright law and may not be used, reproduced, distributed, transmitted, displayed, or modified in any way without the prior written consent of KTGY Group, Inc. or the authorized copyright holder or licensee.